JOINT

OPEN ACCESS TRANSMISSION TARIFF

OF

DUKE ENERGY CAROLINAS, LLC

DUKE ENERGY FLORIDA, LLC

AND

DUKE ENERGY PROGRESS, LLC

TABLE OF CONTENTS

I. COMMON SERVICE PROVISIONS .....

1 Definitions .....

1.1 Affiliate .....

1.2 Ancillary Services .....

1.3 Annual Period .....

1.4 Annual Transmission Costs .....

1.5 Application .....

1.5A Balancing Authority .....

1.5B Balancing Authority Area .....

1.6 Commission .....

1.7 Completed Application .....

1.8 Control Area .....

1.9 Curtailment .....

1.10 DEC .....

1.11 DEF .....

1.12 Delivering Party .....

1.13 DEP .....

1.14 Designated Agent .....

1.15 Direct Assignment Facilities .....

1.16 Eligible Customer .....

1.17 Facilities Study .....

1.18 Firm Point-To-Point Transmission Service .....

1.19 FRCC .....

1.20 Generator Service .....

1.21 Good Utility Practice .....

1.22 Hourly Period .....

1.23 Interruption .....

1.24 Load Ratio Share .....

1.25 Load Shedding .....

1.26 Long-Term Firm Point-To-Point Transmission Service .....

1.27 Monthly Period .....
1.28 Native Load Customers.....
1.29 NERC.....
1.29A Net Energy for Load .....
1.32 Network Customer.....
1.33 Network Integration Transmission Service .....
1.34 Network Load .....
1.35 Network Operating Agreement.....
1.36 Network Operating Committee.....
1.37 Network Resource.....
1.38 Network Upgrades .....
1.39 Non-Firm Point-To-Point Transmission Service.....
1.40 Non-Firm Sales .....
1.41 Open Access Same-Time Information System (OASIS).....
1.42 Part I.....
1.43 Part II .....
1.44 Part III.....
1.45 Part IV.....
1.46 Parties.....
1.47 Point(s) of Delivery.....
1.48 Point(s) of Receipt .....
1.49 Point-To-Point Transmission Service.....
1.50 Power Purchaser.....
1.51 Pre-Confirmed Application.....
1.52 Receiving Party.....
1.53 Regional Transmission Group (RTG).....
1.54 Reserved Capacity .....
1.55 SERC.....
1.56 Service Agreement.....
1.57 Service Commencement Date.....
1.58 Short-Term Firm Point-To-Point Transmission Service .....
1.59 System Condition.....
1.60 System Impact Study .....

1.61 Third-Party Sale
1.62 Time Periods
1.63 Transmission Customer
1.64 Transmission Provider
1.65 Transmission Provider's Monthly Transmission System Peak
1.66 Transmission Service
1.67 Transmission System
1.68 Weekly Period
1.69 Zone
2 Initial Allocation and Renewal Procedures
2.1 Initial Allocation of Available Transfer Capability
2.2 Reservation Priority for Existing Firm Service Customers
3 Ancillary Services and Generator Services
3.1 Scheduling, System Control and Dispatch Service
3.2 Reactive Supply and Voltage Control from Generation or Other Sources Service
3.3 Regulation and Frequency Response Service
3.3A Generator Regulation Service
3.4 Energy Imbalance Service
3.5 Operating Reserve - Spinning Reserve Service
3.6 Operating Reserve - Supplemental Reserve Service
3.7 Generator Imbalance Service
3.8 Credits for Energy and Generation Imbalance Penalty Revenues
4 Open Access Same-Time Information System (OASIS)
4.1 Terms and Conditions
4.2 NAESB WEQ Business Practice Standards
5 Local Furnishing Bonds
5.1 Transmission Providers That Own Facilities Financed by Local Furnishing Bonds
5.2 Alternative Procedures for Requesting Transmission Service
6 Reciprocity
7 Billing and Payment
7.1 Billing Procedure
7.2 Interest on Unpaid Balances
7.3 Customer Default
8 Accounting for the Transmission Provider's Use of the Tariff

8.1 Transmission Revenues .....
8.2 Study Costs and Revenues .....
9 Regulatory Filings
9.1 Federal Power Act Rights Retained .....
9.2 Annual Informational Filings .....
10 Force Majeure and Indemnification .....
10.1 Force Majeure .....
10.2 Indemnification .....
11 Creditworthiness .....
12 Dispute Resolution Procedures .....
12.1 Internal Dispute Resolution Procedures .....
12.2 External Arbitration Procedures .....
12.3 Arbitration Decisions .....
12.4 Costs .....
12.5 Rights Under the Federal Power Act .....
12A Use of Consolidated Method of Accounting .....
12.A.1 Use of Consolidated Method of Accounting .....
II. POINT-TO-POINT TRANSMISSION SERVICE .....
Preamble .....
13 Nature of Firm Point-To-Point Transmission Service .....
13.1 Term .....
13.2 Reservation Priority .....
13.3 Use of Firm Transmission Service by the Transmission Provider .....
13.4 Service Agreements .....
13.5 Transmission Customer Obligations for Facility Additions or Redispatch Costs ....
13.6 Curtailment of Firm Transmission Service .....
13.7 Classification of Firm Transmission Service .....
13.8 Scheduling of Firm Point-To-Point Transmission Service .....
14 Nature of Non-Firm Point-To-Point Transmission Service .....
14.1 Term .....
14.2 Reservation Priority .....
14.3 Use of Non-Firm Point-To-Point Transmission Service by the Transmission Provider .....
14.4 Service Agreements .....

14.5 Classification of Non-Firm Point-To-Point Transmission Service.....
14.6 Scheduling of Non-Firm Point-To-Point Transmission Service.....
14.7 Curtailment or Interruption of Service.....
15 Service Availability .....
15.1 General Conditions .....
15.2 Determination of Available Transfer Capability .....
15.3 Initiating Service in the Absence of an Executed Service Agreement .....
15.4 Obligation to Provide Transmission Service That Requires Expansion or Modification of the Transmission System, Redispatch or Conditional Curtailment
15.5 Deferral of Service.....
15.6 Other Transmission Service Schedules.....
15.7 Real Power Losses .....
16 Transmission Customer Responsibilities.....
16.1 Conditions Required of Transmission Customers .....
16.2 Transmission Customer Responsibility for Third-Party Arrangements .....
17 Procedures for Arranging Firm Point-To-Point Transmission Service .....
17.1 Application.....
17.2 Completed Application .....
17.3 Deposit .....
17.4 Notice of Deficient Application.....
17.5 Response to a Completed Application.....
17.6 Execution of Service Agreement .....
17.7 Extensions for Commencement of Service.....
18 Procedures for Arranging Non-Firm Point-To-Point Transmission Service .....
18.1 Application.....
18.2 Completed Application .....
18.3 Reservation of Non-Firm Point-To-Point Transmission Service.....
18.4 Determination of Available TransferCapability .....
19 Additional Study Procedures for Firm Point-To-Point Transmission Service Requests.....
19.1 Notice of Need for System Impact Study .....
19.2 System Impact Study Agreement and Cost Reimbursement .....
19.3 System Impact Study Procedures.....
19.4 Facilities Study Procedures.....
19.5 Facilities Study Modifications .....

19.6 Due Diligence in Completing New Facilities
19.7 Partial Interim Service
19.8 Expedited Procedures for New Facilities
19.9 Penalties for Failure to Meet Study Deadlines
19.10 Credits for Late Study Penalty Revenues
20 Procedures if the Transmission Provider is Unable to Complete New Transmission Facilities for Firm Point-To-Point Transmission Service
20.1 Delays in Construction of New Facilities
20.2 Alternatives to the Original Facility Additions
20.3 Refund Obligation for Unfinished Facility Additions
21 Provisions Relating to Transmission Construction and Services on the Systems of Other Utilities
21.1 Responsibility for Third-Party System Additions
21.2 Coordination of Third-Party System Additions
22 Changes in Service Specifications
22.1 Modifications on a Non-Firm Basis
22.2 Modification on a Firm Basis
23 Sale or Assignment of Transmission Service
23.1 Procedures for Assignment or Transfer of Service
23.2 Limitations on Assignment or Transfer of Service
23.3 Information on Assignment or Transfer of Service
24 Metering and Power Factor Correction at Receipt and Delivery Points(s)
24.1 Transmission Customer Obligations
24.2 Transmission Provider Access to Metering Data
24.3 Power Factor
25 Compensation for Transmission Service
26 Stranded Cost Recovery
27 Compensation for New Facilities and Redispatch Costs
III. NETWORK INTEGRATION TRANSMISSION SERVICE
Preamble
28 Nature of Network Integration Transmission Service
28.1 Scope of Service
28.2 Transmission Provider Responsibilities
28.3 Network Integration Transmission Service
28.4 Secondary Service

28.5 Real Power Losses
28.6 Restrictions on Use of Service
29 Initiating Service
29.1 Condition Precedent for Receiving Service
29.2 Application Procedures
29.3 Technical Arrangements to be Completed Prior to Commencement of Service
29.4 Network Customer Facilities
29.5 Filing of Service Agreement
30 Network Resources
30.1 Designation of Network Resources
30.2 Designation of New Network Resources
30.3 Termination of Network Resources
30.4 Operation of Network Resources
30.5 Network Customer Redispatch Obligation
30.6 Transmission Arrangements for Network Resources Not Physically Interconnected With the Transmission Provider
30.7 Limitation in Designation of Network Resources
30.8 Use of Interface Capacity by the Network Customer
30.9 Network Customer Owned Transmission Facilities
31 Designation of Network Load
31.1 Network Load
31.2 New Network Loads Connected With the Transmission Provider
31.3 Network Load Not Physically Interconnected with the Transmission Provider
31.4 New Interconnection Points
31.5 Changes in Service Requests
31.6 Annual Load and Resource Information Updates
32 Additional Study Procedures for Network Integration Transmission Service Requests
32.1 Notice of Need for System Impact Study
32.2 System Impact Study Agreement and Cost Reimbursement
32.3 System Impact Study Procedures
32.4 Facilities Study Procedures
32.5 Penalties for Failure to Meet Study Deadlines
33 Load Shedding and Curtailments

33.1 Procedures
33.2 Transmission Constraints
33.3 Cost Responsibility for Relieving Transmission Constraints
33.4 Curtailments of Scheduled Deliveries
33.5 Allocation of Curtailments
33.6 Load Shedding
33.7 System Reliability
34 Rates and Charges
34.1 Monthly Demand Charge
34.2 Determination of Network Customer's Monthly Network Load
34.3 Determination of Transmission Provider's Monthly Transmission System Peak
34.4 Redispatch Charge
34.5 Stranded Cost Recovery
35 Operating Arrangements
35.1 Operation under the Network Operating Agreement
35.2 Network Operating Agreement
35.3 Network Operating Committee
IV. RESERVED

36. RESERVED
37. RESERVED
38. RESERVED
39. RESERVED
40. RESERVED

41. RESERVED
42. RESERVED

43. RESERVED
44. RESERVED
45. RESERVED
46. RESERVED

SCHEDULE 1 -- Scheduling, System Control and Dispatch Service

SCHEDULE 2 -- Reactive Supply and Voltage Control from Generation or Other Sources Service.....
SCHEDULE 3 -- Regulation and Frequency Response Service .....
SCHEDULE 3A -- Generator Regulation Service.....
SCHEDULE 4 -- Energy Imbalance Service.....
SCHEDULE 5 -- Operating Reserve - Spinning Reserve Service .....
SCHEDULE 6 -- Operating Reserve - Supplemental Reserve Service.....
SCHEDULE 7 -- Long-Term Firm and Short-Term Firm Point-To-Point Transmission Service.....
SCHEDULE 8 -- Non-Firm Point-To-Point Transmission Service .....
SCHEDULE 9 -- Loss Compensation Service (DEC Zone, DEP Zone and DEF Zone)
SCHEDULE 10-A -- Network Integration Transmission Service – DEF Zone.....
SCHEDULE 10-A.1– Formula Rate Implementation Protocols .....
SCHEDULE 10-A.2 – Formula Rate Template – DEF Zone.....
SCHEDULE 10-A.3 – Notes for Formula Rate – DEF Zone .....
SCHEDULE 10-A.4 – Accounting for CWIP in Rate Base – OATT Administration.....
SCHEDULE 10-B -- Network Integration Transmission Service – DEC Zone.....
SCHEDULE 10-C -- Network Integration Transmission Service – DEP Zone .....
SCHEDULE 11 -- Distribution Substation Service – DEF Zone.....
SCHEDULE 12 -- RESERVED .....
SCHEDULE 13 -- Generator Imbalance Service .....

ATTACHMENT A -- Form of Service Agreement for Firm Point-To-Point Transmission Service.....
ATTACHMENT A-1 -- Form of Service Agreement for the Resale, Reassignment or Transfer of Point-To-Point Transmission Service .....
ATTACHMENT B -- Form of Service Agreement for Non-Firm Point-To-Point Transmission Service.....
ATTACHMENT C-1 -- Methodology to Assess Available Transfer Capability (DEC and DEP Zones).....
ATTACHMENT C-2 -- Methodology to Assess Available TransferCapability (DEF Zone) .....
ATTACHMENT C-3 -- RESERVED.....
ATTACHMENT D -- Methodology for Completing a System Impact Study .....
ATTACHMENT E -- Index of Point-To-Point Transmission Service Customers.....

ATTACHMENT F-1 – Form of Service Agreement for Network Integration Transmission Service (DEP Zone and DEF Zone) .....

ATTACHMENT F-2 – Form of Service Agreement for Network Integration Transmission Service (DEC Zone) .....

ATTACHMENT G -- Network Operating Agreement.....

ATTACHMENT H -- Network Integration Transmission Service .....

ATTACHMENT I -- Index of Network Integration Transmission Service Customers .....

ATTACHMENT J -- Standard Large Generator Interconnection Procedures (LGIP) (including the Large Generator Interconnection Agreement (LGIA)) .....

ATTACHMENT K --RESERVED

ATTACHMENT L -- North American Electric Reliability Corporation Transmission Loading Relief Procedures and Procedures for Addressing Parallel Flows ..

ATTACHMENT M -- Small Generator Interconnection Procedures (SGIP) (including the Small Generator Interconnection Agreement (SGIA)) .....

ATTACHMENT N-1 -- Transmission Planning Process (Progress Zone and Duke Zone).....

ATTACHMENT N-2 -- Transmission Planning Process (DEF Zone).....

ATTACHMENT N-3 – Transmission Providers Enrolled in the SERTP .....

ATTACHMENT O -- Creditworthiness Procedures .....

ATTACHMENT P -- Methodology for Clustering Transmission Sudies.....

ATTACHMENT Q – Procedures for Changing the Real Power Loss Factor (DEF Zone) .....

ATTACHMENT R – RESERVED.....

ATTACHMENT S -- RESERVED .....

ATTACHMENT T -- Point-to-Point Transmission Service Products Offered .....

ATTACHMENT U -- DEF's Rate Treatment of New Transmission Radials .....

ATTACHMENT V -- Power Factor Requirements (DEF Zone) ……

ATTACHMENT W --Methodology for Calculation of Real Power Loss Factor (DEC Zone and DEP Zone)……

ATTACHMENT X -- Non-Firm Energy Exchange Transmission Service……...

ATTACHMENT X-1 -- Form of Service Agreement for Non-Firm Energy Exchange Transmission Service…….

I. COMMON SERVICE PROVISIONS

1 Definitions

1.1 Affiliate:

With respect to a corporation, partnership or other entity, each such other corporation, partnership or other entity that directly or indirectly, through one or more intermediaries, controls, is controlled by, or is under common control with, such corporation, partnership or other entity.

1.2 Ancillary Services:

Those services that are necessary to support the transmission of capacity and energy from resources to loads while maintaining reliable operation of the Transmission Provider's Transmission System in accordance with Good Utility Practice.

1.3 Annual Period:

The period of time coinciding with the calendar year beginning 12:00 a.m. on January 1 and ending 12:00 midnight on December 31, or a period of time that covers 12 consecutive months.

1.4 Annual Transmission Costs:

The total annual cost of the Transmission System for purposes of Network Integration Transmission Service shall be the amount specified in Attachment H until amended by the Transmission Provider or modified by the Commission.

1.5 Application:

A request by an Eligible Customer for transmission service pursuant to the provisions of the Tariff.

1.5A Balancing Authority:

The responsible entity that integrates resource plans ahead of time, maintains load-interchange-generation balance within a Balancing Authority Area, and supports Interconnection frequency in real time.

1.5B Balancing Authority Area:

The collection of generation, transmission, and loads within the metered boundaries of the Balancing Authority. The Balancing Authority maintains load-resource balance within this area.

1.6 Commission:

The Federal Energy Regulatory Commission.

1.7 Completed Application:

An Application that satisfies all of the information and other requirements of the Tariff, including any required deposit.

1.8 Control Area:

An electric power system or combination of electric power systems to which a common automatic generation control scheme is applied in order to:

(1) match, at all times, the power output of the generators within the electric power system(s) and capacity and energy purchased from entities outside the electric power system(s), with the load within the electric power system(s);

(2) maintain scheduled interchange with other Control Areas, within the limits of Good Utility Practice;

(3) maintain the frequency of the electric power system(s) within reasonable limits in accordance with Good Utility Practice; and

(4) provide sufficient generating capacity to maintain operating reserves in accordance with Good Utility Practice.

1.9 Curtailment:

A reduction in firm or non-firm transmission service in response to a transfer capability shortage as a result of system reliability conditions.

1.10 DEC:

Duke Energy Carolinas, LLC.

1.11 DEF:

Duke Energy Florida, LLC

1.12 Delivering Party:

The entity supplying capacity and energy to be transmitted at Point(s) of Receipt.

1.13 DEP:

Duke Energy Progress LLC

1.14 Designated Agent:

Any entity that performs actions or functions on behalf of the Transmission Provider, an Eligible Customer, or the Transmission Customer required under the Tariff.

1.15 Direct Assignment Facilities:

Facilities or portions of facilities that are constructed by the Transmission Provider for the sole use/benefit of a particular Transmission Customer requesting service under the Tariff. Direct Assignment Facilities shall be specified in the Service Agreement that governs service to the Transmission Customer and shall be subject to Commission approval.

1.16 Eligible Customer:

(i) Any electric utility (including the Transmission Provider and any power marketer), Federal power marketing agency, or any person generating electric energy for sale for resale is an Eligible Customer under the Tariff. Electric energy sold or produced by such entity may be electric energy produced in the United States, Canada or Mexico. However, with respect to transmission service that the Commission is prohibited from ordering by Section 212(h) of the Federal Power Act, such entity is eligible only if the service is provided pursuant to a state requirement that the Transmission Provider offer the unbundled transmission service, or pursuant to a voluntary offer of such service by the Transmission Provider. (ii) Any retail customer taking unbundled transmission service pursuant to a state requirement that the Transmission Provider offer the transmission service, or pursuant to a voluntary offer of such service by the Transmission Provider, is an Eligible Customer under the Tariff.

1.17 Facilities Study:

An engineering study conducted by the Transmission Provider to determine the required modifications to the Transmission Provider's Transmission System, including the cost and scheduled completion date for such modifications, that will be required to provide the requested transmission service.

1.18 Firm Point-To-Point Transmission Service:

Transmission Service under this Tariff that is reserved and/or scheduled between specified Points of Receipt and Delivery pursuant to Part II of this Tariff.

1.19 FRCC:

The Florida Reliability Coordinating Council, a regional reliability organization of NERC.

1.20 Generator Service:

Generator Regulation Service and Delivery Scheduling and Balancing Service, as provided in Section 3 and Schedule 3A.

1.21 Good Utility Practice:

Any of the practices, methods and acts engaged in or approved by a significant portion of the electric utility industry during the relevant time period, or any of the practices, methods and acts which, in the exercise of reasonable judgment in light of the facts known at the time the decision was made, could have been expected to accomplish the desired result at a reasonable cost consistent with good business practices, reliability, safety and expedition. Good Utility Practice is not intended to be limited to the optimum practice, method, or act to the exclusion of all others, but rather to be acceptable practices, methods, or acts generally accepted in the region, including those practices required by Federal Power Act section 215(a)(4).

1.22 Hourly Period:

A period of time consisting of 60 consecutive minutes beginning at the top of each hour.

1.23 Interruption:

A reduction in non-firm transmission service due to economic reasons pursuant to Section 14.7.

1.24 Load Ratio Share:

In the DEC Zone, Load Ratio Share means the ratio of a Transmission Customer's Network Load to the Transmission Provider's Monthly Transmission System Peak

computed in accordance with Sections 34.2 and 34.3 of the Network Integration Transmission Service under Part III of the Tariff.

1.25 Load Shedding:

The systematic reduction of system demand by temporarily decreasing load in response to transmission system or area capacity shortages, system instability, or voltage control considerations under Part III of the Tariff.

1.26 Long-Term Firm Point-To-Point Transmission Service:

Firm Point-To-Point Transmission Service under Part II of the Tariff with a term of one year or more.

1.27 Monthly Period:

The period of time which coincides with the calendar month beginning on 12:00 a.m. on the first day of the month and ending 12:00 midnight on the last day of the month, or a period of time that covers 30 consecutive days.

1.28 Native Load Customers:

The wholesale and retail power customers of the Transmission Provider on whose behalf the Transmission Provider, by statute, franchise, regulatory requirement, or contract, has undertaken an obligation to construct and operate the Transmission Provider's system to meet the reliable electric needs of such customers.

1.29 NERC:

The North American Electric Reliability Corporation.

1.29A Net Energy for Load:

The net Balancing Authority Area generation, plus energy received from other Balancing Authority Areas, less energy delivered to Balancing Authority Areas

through interchange. Net Energy for Load includes Balancing Authority Area losses but excludes energy required for storage at energy storage facilities.

1.30 Reserved

1.31 Reserved

1.32 Network Customer:

An entity receiving transmission service pursuant to the terms of the Transmission Provider's Network Integration Transmission Service under Part III of the Tariff.

1.33 Network Integration Transmission Service:

The transmission service provided under Part III of the Tariff.

1.34 Network Load:

The load that a Network Customer designates for Network Integration Transmission Service under Part III of the Tariff. The Network Customer's Network Load shall include all load served by the output of any Network Resources designated by the Network Customer. A Network Customer may elect to designate less than its total load as Network Load but may not designate only part of the load at a discrete Point of Delivery. Where an Eligible Customer has elected not to designate a particular load at discrete points of delivery as Network Load, the Eligible Customer is responsible for making separate arrangements under Part II of the Tariff for any Point-To-Point Transmission Service that may be necessary for such non-designated load.

1.35 Network Operating Agreement:

An executed agreement that contains the terms and conditions under which the Network Customer shall operate its facilities and the technical and operational

matters associated with the implementation of Network Integration Transmission Service under Part III of the Tariff.

1.36 Network Operating Committee:

A group made up of representatives from the Network Customer(s) and the Transmission Provider established to coordinate operating criteria and other technical considerations required for implementation of Network Integration Transmission Service under Part III of this Tariff.

1.37 Network Resource:

Any designated generating resource owned, purchased or leased by a Network Customer under the Network Integration Transmission Service portion of the Tariff. Network Resources do not include any resource, or any portion thereof, that is committed for sale to third parties or otherwise cannot be called upon to meet the Network Customer's Network Load on a non-interruptible basis, except for purposes of fulfilling obligations under a reserve sharing program.

1.38 Network Upgrades:

Modifications or additions to transmission-related facilities that are integrated with and support the Transmission Provider's overall Transmission System for the general benefit of all users of such Transmission System.

1.39 Non-Firm Energy Exchange Transmission Service:

Transmission service provided in the DEC Zone, DEP Zone and DEF Zone in accordance with Attachment X of this Tariff.

1.40 Non-Firm Point-To-Point Transmission Service:

Point-To-Point Transmission Service under the Tariff that is reserved and scheduled on an as-available basis and is subject to Curtailment or Interruption as

set forth in Section 14.7 under Part II of this Tariff. Non-Firm Point-To-Point Transmission Service is available on a stand-alone basis for periods ranging from one hour to one month.

1.41 Non-Firm Sale:

An energy sale for which receipt or delivery may be interrupted for any reason or no reason, without liability on the part of either the buyer or seller.

1.42 Open Access Same-Time Information System (OASIS):

The information system and standards of conduct contained in Part 37 and Part 38 of the Commission's regulations and all additional requirements implemented by subsequent Commission orders dealing with OASIS.

1.43 Part I:

Tariff Definitions and Common Service Provisions contained in Sections 2 through 12.

1.44 Part II:

Tariff Sections 13 through 27 pertaining to Point-To-Point Transmission Service in conjunction with the applicable Common Service Provisions of Part I and appropriate Schedules and Attachments.

1.45 Part III:

Tariff Sections 28 through 35 pertaining to Network Integration Transmission Service in conjunction with the applicable Common Service Provisions of Part I and appropriate Schedules and Attachments.

1.46 Reserved

1.47 Parties:

The Transmission Provider and the Transmission Customer receiving service under the Tariff.

1.48 Point(s) of Delivery:

Point(s) on the Transmission Provider's Transmission System where capacity and energy transmitted by the Transmission Provider will be made available to the Receiving Party under Part II of the Tariff. The Point(s) of Delivery shall be specified in the Service Agreements for Long-Term Firm Point-To-Point Transmission Service.

1.49 Point(s) of Receipt:

Point(s) of interconnection on the Transmission Provider's Transmission System where capacity and energy will be made available to the Transmission Provider by the Delivering Party under Part II of the Tariff. The Point(s) of Receipt shall be specified in the Service Agreement for Long-Term Firm Point-To-Point Transmission Service.

1.50 Point-To-Point Transmission Service:

The reservation and transmission of capacity and energy on either a firm or non-firm basis from the Point(s) of Receipt to the Point(s) of Delivery under Part II of the Tariff.

1.51 Power Purchaser:

The entity that is purchasing the capacity and energy to be transmitted under the Tariff.

1.52 Pre-Confirmed Application:

An Application that commits the Eligible Customer to execute a Service Agreement upon receipt of notification that the Transmission Provider can provide the requested Transmission Service.

1.53 Receiving Party:

The entity receiving the capacity and energy transmitted by the Transmission Provider to Point(s) of Delivery.

1.54 Regional Transmission Group (RTG):

A voluntary organization of transmission owners, transmission users and other entities approved by the Commission to efficiently coordinate transmission planning (and expansion), operation and use on a regional (and interregional) basis.

1.55 Reserved Capacity:

The maximum amount of capacity and energy that the Transmission Provider agrees to transmit for the Transmission Customer over the Transmission Provider's Transmission System between the Point(s) of Receipt and the Point(s) of Delivery under Part II of the Tariff. Reserved Capacity shall be expressed in terms of whole megawatts on a sixty (60) minute interval (commencing on the clock hour) basis.

1.56 SERC:

The SERC Reliability Corporation, a regional reliability organization of NERC.

1.57 Service Agreement:

The initial agreement and any amendments or supplements thereto entered into by the Transmission Customer and the Transmission Provider for service under the Tariff.

1.58 Service Commencement Date:

The date the Transmission Provider begins to provide service pursuant to the terms of an executed Service Agreement, or the date the Transmission Provider begins to provide service in accordance with Section 15.3 Section or Section 29.1 under the Tariff.

1.58 Short-Term Firm Point-To-Point Transmission Service:

Firm Point-To-Point Transmission Service under Part II of the Tariff with a term of less than one year.

1.59 System Condition:

A specified condition on the Transmission Provider's system or on a neighboring system, such as a constrained transmission element or flowgate, that may trigger Curtailment of Long-Term Firm Point-To-Point Transmission Service using the curtailment priority pursuant to Section 13.6. Such conditions must be identified in the Transmission Customer's Service Agreement.

1.60 System Impact Study:

An assessment by the Transmission Provider of (i) the adequacy of the Transmission System to accommodate a request for either Firm Point-To-Point Transmission Service or Network Integration Transmission Service and (ii)

whether any additional costs may be incurred in order to provide transmission service.

1.61 Third-Party Sale:

Any sale for resale in interstate commerce to a Power Purchaser that is not designated as part of Network Load under the Network Integration Transmission Service.

1.63 Time Periods:

The Daily Period is defined as the period of time coinciding with the 24-hour calendar day beginning 12:00 a.m. and ending 12:00 midnight (00:00 to 24:00 military time).

In the DEC Zone, the daily sliding period is the 24 hour period of time beginning at 11:00 p.m., 12:00 midnight, or 1:00 a.m. (23:00, 24:00 or 01:00 military time).

On-peak days are defined as Monday through Friday of each week with the exception of the following holidays which are considered off-peak days: New Year's Day, Memorial Day, Independence Day, Labor Day, Thanksgiving Day and Christmas Day. All Saturdays and Sundays are considered off-peak days. In the DEP Zone, Good Friday is also considered an off-peak day.

On-peak hours are the hours from 7 a.m. through 11 p.m. (07:00 through 23:00 military time) during on-peak days. All other hours are considered off-peak hours.

1.64 Transmission Customer:

Any Eligible Customer (or its Designated Agent) that (i) executes a Service Agreement, or (ii) requests in writing that the Transmission Provider file with the Commission, a proposed unexecuted Service Agreement to receive transmission

service under Part II of the Tariff. This term is used in the Part I Common Service Provisions to include customers receiving transmission service under Part II or Part III of this Tariff. In addition, this term is used in Part I Common Service Provisions to include customers in the DEC Zone, DEPZone and DEF Zone receiving Non-Firm Energy Exchange Transmission Service under Attachment X to the Tariff, unless such Common Service Provisions are specifically excluded in Attachment X.

1.65 Transmission Provider:

The public utility (or its Designated Agent) that owns, controls, or operates facilities used for the transmission of electric energy in interstate commerce and provides transmission service under the Tariff as follows: (a) DEP is the Transmission Provider in the DEP Zone; (b) DEF is the Transmission Provider in the DEF Zone; and (c) DEC is the Transmission Provider in the DEC Zone.

1.66 Transmission Provider's Monthly Transmission System Peak:

The maximum firm usage in a Zone of the Transmission Provider's Transmission System as determined under Section 34.3.

1.67 Transmission Service:

Point-To-Point Transmission Service provided under Part II of the Tariff on a firm and non-firm basis.

1.68 Transmission System:

The facilities owned, controlled or operated by the Transmission Provider in a Zone that are used to provide transmission service under Part II and Part III of the Tariff.

1.69 Weekly Period:

Weekly Period is the period of seven consecutive days coinciding with the calendar week beginning 12:00 a.m. Monday morning and ending 12:00 midnight on Sunday, or a period of time that covers seven consecutive days.

1.70 Zone:

The Transmission System of DEC, the Transmission System of DEP, or the Transmission System of DEF, as applicable.

2 Initial Allocation and Renewal Procedures

2.1 Initial Allocation of Available Transfer Capability:

For purposes of determining whether existing capability on the Transmission Provider's Transmission System is adequate to accommodate a request for firm service under this Tariff, all Completed Applications for new firm transmission service received during the initial sixty (60) day period commencing with the effective date of the Tariff will be deemed to have been filed simultaneously. A lottery system conducted by an independent party shall be used to assign priorities for Completed Applications filed simultaneously. All Completed Applications for firm transmission service received after the initial sixty (60) day period shall be assigned a priority pursuant to Section 13.2.

2.2 Reservation Priority for Existing Firm Service Customers:

Existing firm service customers (wholesale requirements and transmission-only, with a contract term of five years or more), have the right to continue to take transmission service from the Transmission Provider when the contract expires, rolls over or is renewed. This transmission reservation priority is independent of whether the existing customer continues to purchase capacity and energy from the Transmission Provider or elects to purchase capacity and energy from another supplier. If at the end of the contract term, the Transmission Provider's Transmission System cannot accommodate all of the requests for transmission service, the existing firm service customer must agree to accept a contract term at least equal to a competing request by any new Eligible Customer and to pay the current just and reasonable rate, as approved by the Commission, for such service; provided that, the firm service customer shall have a right of first refusal at the

end of such service only if the new contract is for five years or more. The existing firm service customer must provide notice to the Transmission Provider whether it will exercise its right of first refusal no less than one year prior to the expiration date of its transmission service agreement. This transmission reservation priority for existing firm service customers is an ongoing right that may be exercised at the end of all firm contract terms of five years or longer. Service agreements subject to a right of first refusal entered into prior to October 15, 2008 for DEP, April 1, 2009 for DEC, and July 25, 2008 for DEF or associated with a transmission service request received prior to July 13, 2007, unless terminated, will become subject to the five year/one year requirement on the first rollover date after October 15, 2008 for DEP, April 1, 2009 for DEC, and July 25, 2008 for DEF; provided that, the one-year notice requirement shall apply to such service agreements with five years or more left in their terms as of October 15, 2008 for DEP, April 1, 2009 for DEC, and July 25, 2008 for DEF.

3 Ancillary Services and Generator Services

Ancillary Services and Generator Services are needed with transmission service to maintain reliability within and among the Control Areas affected by the transmission service. The Transmission Provider is required to provide (or offer to arrange with the local Control Area operator as discussed below), and the Transmission Customer is required to purchase, the following Ancillary Services (i) Scheduling, System Control and Dispatch, and (ii) Reactive Supply and Voltage Control from Generation or Other Sources.

The Transmission Provider is required to offer to provide (or offer to arrange with the local Control Area operator as discussed below) the following Ancillary Services only to the Transmission Customer serving load within the Transmission Provider's Control Area (i) Regulation and Frequency Response, (ii) Energy Imbalance, (iii) Operating Reserve - Spinning, and (iv) Operating Reserve - Supplemental. The Transmission Customer serving load within the Transmission Provider's Control Area is required to acquire these Ancillary Services, whether from the Transmission Provider, from a third party, or by self-supply.

The Transmission Provider is required to provide (or offer to arrange with the local Control Area Operator as discussed below), to the extent it is physically feasible to do so from its resources or from resources available to it, Generator Imbalance Service when Transmission Service is used to deliver energy from a generator located within its Control Area. The Transmission Customer using Transmission Service to deliver energy from a generator located within the Transmission Provider's Control Area is required to acquire Generator Imbalance Service, whether from the Transmission Provider, from a third party, or by self-supply.

For Transmission Service provided in the DEF Zone, the Transmission Provider is required to offer to provide (or offer to arrange with the local Control Area operator as discussed below) the following Generator Services: (i) Generator Regulation Service to the Transmission Customer serving load outside the Transmission Provider's Control Area from generation located inside the Transmission Provider's Control Area; and (ii) Delivery Scheduling and Balancing Service to the Transmission Customer that takes energy from generation located inside the Transmission Provider's Control Area.

The Transmission Customer may not decline the Transmission Provider's offer of Ancillary Services or Generator Services unless it demonstrates that it has acquired the Ancillary Services or Generator Services from another source. The Transmission Customer must list in its Application which Ancillary Services and Generator Services it will purchase from the Transmission Provider. A Transmission Customer that exceeds its firm reserved capacity at any Point of Receipt or Point of Delivery or an Eligible Customer that uses Transmission Service at a Point of Receipt or Point of Delivery that it has not reserved is required to pay for all of the Ancillary Services identified in this section that were provided by the Transmission Provider associated with the unreserved service. The Transmission Customer or Eligible Customer will pay for Ancillary Services based on the amount of transmission service it used but did not reserve.

If the Transmission Provider is a public utility providing transmission service but is not a Control Area operator, it may be unable to provide some or all of the Ancillary Services and Generator Services. In this case, the Transmission Provider can fulfill its obligation to provide Ancillary Services and Generator Services by acting as the Transmission Customer's agent to secure these Ancillary Services and Generator Services

from the Control Area operator. The Transmission Customer may elect to (i) have the Transmission Provider act as its agent, (ii) secure the Ancillary Services and Generator Services directly from the Control Area operator, or (iii) secure the Ancillary Services and Generator Services (discussed in Schedules 3, 3A, 4, 5, 6 and 13) from a third party or by self-supply when technically feasible.

The Transmission Provider shall specify the rate treatment and all related terms and conditions in the event of an unauthorized use of Ancillary Services or Generator Services by the Transmission Customer.

The specific Ancillary Services and Generator Services, prices and/or compensation methods are described on the Schedules that are attached to and made a part of the Tariff. Three principal requirements apply to discounts for Ancillary Services and Generator Services provided by the Transmission Provider in conjunction with its provision of transmission service as follows: (1) any offer of a discount made by the Transmission Provider must be announced to all Eligible Customers solely by posting on the OASIS, (2) any customer-initiated requests for discounts (including requests for use by one's wholesale merchant or an Affiliate's use) must occur solely by posting on the OASIS, and (3) once a discount is negotiated, details must be immediately posted on the OASIS. A discount agreed upon for an Ancillary Service or Generator Service must be offered for the same period to all Eligible Customers on the Transmission Provider's system. Sections 3.1 through 3.7 below list the seven Ancillary Services and Generator Services.

3.1 Scheduling, System Control and Dispatch Service:

The rates and/or methodology are described in Schedule 1.

3.2 Reactive Supply and Voltage Control from Generation or Other Sources Service:

The rates and/or methodology are described in Schedule 2.

3.3 Regulation and Frequency Response Service:

Where applicable the rates and/or methodology are described in Schedule 3.

3.3A Generator Regulation Service:

Where applicable the rates and/or methodology are described in Schedule 3A.

3.4 Energy Imbalance Service:

Where applicable the rates and/or methodology are described in Schedule 4.

3.5 Operating Reserve - Spinning Reserve Service:

Where applicable the rates and/or methodology are described in Schedule 5.

3.6 Operating Reserve - Supplemental Reserve Service:

Where applicable the rates and/or methodology are described in Schedule 6.

3.7 Generator Imbalance Service:

Where applicable the rates and/or methodology are described in Schedule 13.

3.8 Credits for Energy and Generation Imbalance Penalty Revenues:

Where applicable the rates and/or methodology are described in Schedules 4 and 13.

4 Open Access Same-Time Information System (OASIS)

4.1 Terms and Conditions

Terms and conditions regarding Open Access Same-Time Information System and standards of conduct are set forth in 18 C.F.R. § 37 of the Commission's regulations (Open Access Same-Time Information System and Standards of Conduct for Public Utilities) and 18 C.F.R. § 38 of the Commission's regulations (Business Practice Standards and Communication Protocols for Public Utilities). In the event available transfer capability as posted on the OASIS is insufficient to accommodate a request for firm transmission service, additional studies may be required as provided by this Tariff pursuant to Sections 19 and 32.

The Transmission Provider shall post on OASIS and its public website an electronic link to all rules, standards and practices that (i) relate to the terms and conditions of transmission service, (ii) are not subject to a North American Energy Standards Board (NAESB) copyright restriction, and (iii) are not otherwise included in this Tariff. The Transmission Provider shall post on OASIS and on its public website an electronic link to the NAESB website where any rules, standards and practices that are protected by copyright may be obtained. The Transmission Provider shall also post on OASIS and its public website an electronic link to a statement of the process by which the Transmission Provider shall add, delete or otherwise modify the rules, standards and practices that are not included in this Tariff. Such process shall set forth the means by which the Transmission Provider shall provide reasonable advance notice to Transmission Customers and Eligible Customers of any such additions, deletions or

modifications, the associated effective date, and any additional implementation procedures that the Transmission Provider deems appropriate.

4.2 NAESB WEQ Business Practice Standards

The following business practice and electronic communication standards promulgated by the North American Energy Standards Board (NAESB) Wholesale Electric Quadrant (WEQ) are incorporated herein by reference:

(1) WEQ-000, Abbreviations, Acronyms, and Definition of Terms, Standard WEQ-000-2 ([WEQ] Version 003.3,March 30, 2020;

(2) WEQ-000, Abbreviations, Acronyms, and Definition of Terms ([WEQ] Version 003.2, Dec. 8, 2017 (with minor correction applied July 23, 2019);

(3) WEQ-001, Open Access Same-Time Information Systems (OASIS), OASIS Version 2.0 [WEQ] Version 003.3, March 30, 2020;

(4) WEQ-002, Open Access Same-Time Information Systems (OASIS) Business Practice Standards and Communication Protocols (S&CP), OASIS Version 2.0 ([WEQ] Version 003.3, March 30, 2020);

(5) WEQ-003, Open Access Same-Time Information Systems (OASIS) Data Dictionary, OASIS Version 2.0 ([WEQ] Version 003.2, Dec. 8, 2017) (with minor corrections applied July 23, 2019);

(6) WEQ-004, Coordinate Interchange ([WEQ] Version 003.2, Dec. 8, 2017);

(7) WEQ-005, Area Control Error (ACE) Equation Special Cases ([WEQ] Version 003.2, Dec. 8, 2017);

(8) WEQ-006, Manual Time Error Correction, ([WEQ] Version 003.1, Sept. 30, 2015);

(9) WEQ-007, Inadvertent Interchange Payback ([WEQ] Version 003.2, Dec. 8, 2017);

(10) WEQ-008, Transmission Loading Relief (TLR) – Eastern Interconnection ([WEQ] Version 003.3, March 30, 2020);

(11) WEQ-011, Gas/ Electric Coordination ([WEQ] Version 003.2, Dec. 8, 2017);

(12) WEQ-012, Public Key Infrastructure (PKI) ([WEQ] Version 003.2, Dec. 8, 2017):

(13) WEQ-013, Open Access Same-Time Information Systems (OASIS) Implementation Guide, [OASIS] Version 2.2 ([WEQ] Version 003.2, Dec. 8, 2017);

(14) WEQ-015, Measurement and Verification of Wholesale Electricity Demand Response ([WEQ] Version 003.2, Dec. 8, 2017);

(15) WEQ-021, Measurement and Verification of Energy Efficiency Products ([WEQ] Version 003.2, Dec. 8, 2017);

(16) WEQ–022, Electric Industry Registry ([WEQ] Version 003.2, Dec. 8, 2017); and

(17) WEQ-023, Modeling. ([WEQ] Version 003.2, Dec. 8, 2017), including only: standards WEQ-023-5; WEQ-023-5.1; WEQ-023-5.1.1; WEQ-023-5.1.2; WEQ-023- 5.1.2.1; WEQ-023-5.1.2.2; WEQ-023-5.1.2.3; WEQ-023-5.1.3; WEQ-023-5.2; WEQ_023-6; WEQ-023-6.1; WEQ-023-6.1.1; WEQ-023-6.1.2; and WEQ-023-A Appendix A.

5 Local Furnishing Bonds

5.1 Transmission Providers That Own Facilities Financed by Local Furnishing Bonds:

This provision is applicable only to Transmission Providers that have financed facilities for the local furnishing of electric energy with tax-exempt bonds, as described in Section 142(f) of the Internal Revenue Code ("local furnishing bonds"). Notwithstanding any other provision of this Tariff, the Transmission Provider shall not be required to provide transmission service to any Eligible Customer pursuant to this Tariff if the provision of such transmission service would jeopardize the tax-exempt status of any local furnishing bond(s) used to finance the Transmission Provider's facilities that would be used in providing such transmission service.

5.2 Alternative Procedures for Requesting Transmission Service:

(i) If the Transmission Provider determines that the provision of transmission service requested by an Eligible Customer would jeopardize the tax-exempt status of any local furnishing bond(s) used to finance its facilities that would be used in providing such transmission service, it shall advise the Eligible Customer within thirty (30) days of receipt of the Completed Application.

(ii) If the Eligible Customer thereafter renews its request for the same transmission service referred to in (i) by tendering an application under Section 211 of the Federal Power Act, the Transmission Provider, within ten (10) days of receiving a copy of the Section 211 application, will waive its rights to a request for service under Section 213(a) of the Federal

Power Act and to the issuance of a proposed order under Section 212(c) of the Federal Power Act. The Commission, upon receipt of the Transmission Provider's waiver of its rights to a request for service under Section 213(a) of the Federal Power Act and to the issuance of a proposed order under Section 212(c) of the Federal Power Act, shall issue an order under Section 211 of the Federal Power Act. Upon issuance of the order under Section 211 of the Federal Power Act, the Transmission Provider shall be required to provide the requested transmission service in accordance with the terms and conditions of this Tariff.

6 Reciprocity

A Transmission Customer receiving transmission service under this Tariff agrees to provide comparable transmission service that it is capable of providing to the Transmission Provider on similar terms and conditions over facilities used for the transmission of electric energy owned, controlled or operated by the Transmission Customer and over facilities used for the transmission of electric energy owned, controlled or operated by the Transmission Customer's corporate Affiliates. A Transmission Customer that is a member of, or takes transmission service from, a power pool, Regional Transmission Group, Regional Transmission Organization (RTO), Independent System Operator (ISO) or other transmission organization approved by the Commission for the operation of transmission facilities also agrees to provide comparable transmission service to the transmission-owning members of such power pool and Regional Transmission Group, RTO, ISO or other transmission organization on similar terms and conditions over facilities used for the transmission of electric energy owned, controlled or operated by the Transmission Customer and over facilities used for the transmission of electric energy owned, controlled or operated by the Transmission Customer's corporate Affiliates.

This reciprocity requirement applies not only to the Transmission Customer that obtains transmission service under the Tariff, but also to all parties to a transaction that involves the use of transmission service under the Tariff, including the power seller, buyer and any intermediary, such as a power marketer. This reciprocity requirement also applies to any Eligible Customer that owns, controls or operates transmission facilities that uses an intermediary, such as a power marketer, to request transmission service under the Tariff. If the Transmission Customer does not own, control or operate

transmission facilities, it must include in its Application a sworn statement of one of its duly authorized officers or other representatives that the purpose of its Application is not to assist an Eligible Customer to avoid the requirements of this provision.

7 Billing and Payment

7.1 Billing Procedure:

Within a reasonable time after the first day of each month, the Transmission Provider shall submit an invoice to the Transmission Customer for the charges for all services furnished under the Tariff during the preceding month. The invoice shall be paid by the Transmission Customer within twenty (20) days of receipt. All payments shall be made in immediately available funds payable to the Transmission Provider, or by wire transfer to a bank named by the Transmission Provider.

7.2 Interest on Unpaid Balances:

Interest on any unpaid amounts (including amounts placed in escrow) shall be calculated in accordance with the methodology specified for interest on refunds in the Commission's regulations at 18 C.F.R. § 35.19a(a)(2)(iii). Interest on delinquent amounts shall be calculated from the due date of the bill to the date of payment. When payments are made by mail, bills shall be considered as having been paid on the date of receipt by the Transmission Provider.

7.3 Customer Default:

In the event the Transmission Customer fails, for any reason other than a billing dispute as described below, to make payment to the Transmission Provider on or before the due date as described above, and such failure of payment is not corrected within thirty (30) calendar days after the Transmission Provider notifies the Transmission Customer to cure such failure, a default by the Transmission Customer shall be deemed to exist. Upon the occurrence of a default, the Transmission Provider may initiate a proceeding with the Commission to

terminate service but shall not terminate service until the Commission so approves any such request. In the event of a billing dispute between the Transmission Provider and the Transmission Customer, the Transmission Provider will continue to provide service under the Service Agreement as long as the Transmission Customer (i) continues to make all payments not in dispute, and (ii) pays into an independent escrow account the portion of the invoice in dispute, pending resolution of such dispute. If the Transmission Customer fails to meet these two requirements for continuation of service, then the Transmission Provider may provide notice to the Transmission Customer of its intention to suspend service in sixty (60) days, in accordance with Commission policy.

8 Accounting for the Transmission Provider's Use of the Tariff

The Transmission Provider shall record the following amounts, as outlined below.

8.1 Transmission Revenues:

Include in a separate operating revenue account or subaccount the revenues it receives from Transmission Service when making Third-Party Sales under Part II of the Tariff.

8.2 Study Costs and Revenues:

Include in a separate transmission operating expense account or subaccount, costs properly chargeable to expense that are incurred to perform any System Impact Studies or Facilities Studies which the Transmission Provider conducts to determine if it must construct new transmission facilities or upgrades necessary for its own uses, including making Third-Party Sales under the Tariff; and include in a separate operating revenue account or subaccount the revenues received for System Impact Studies or Facilities Studies performed when such amounts are separately stated and identified in the Transmission Customer's billing under the Tariff.

9 Regulatory Filings

9.1 Federal Power Act Rights Retained

Except as provided in Schedule 10-B, Exhibit A, Section 3(h), (a) nothing contained in the Tariff or any Service Agreement shall be construed as affecting in any way the right of the Transmission Provider to unilaterally make application to the Commission for a change in rates, terms and conditions, charges, classification of service, Service Agreement, rule or regulation under Section 205 of the Federal Power Act and pursuant to the Commission's rules and regulations promulgated thereunder, and (b) nothing contained in the Tariff or any Service Agreement shall be construed as affecting in any way the ability of any Party receiving service under the Tariff to exercise its rights under the Federal Power Act and pursuant to the Commission's rules and regulations promulgated thereunder.

9.2 Annual Informational Filings:

The Transmission Provider shall make annual filings with the Commission providing a summary of penalty revenue credits that were provided in accordance with the following: Energy and Generator Imbalance (reference Schedule 4, Sections 4.2.2 and 4.3.1 and Schedule 13, Sections 13.1 and 13.2); late study penalties as described in Section 19.10; and unreserved use penalties as described in Sections A.7.6 and B.7.6 of Schedule 7. Sections A.8.7 and B.8.7 of Schedule 8, and Section 7.G of the DEC OASIS Business Practices (available at http://www.oatioasis.com/DUK/DUKdocs/Practices.pdf).

The annual filing will provide a summary of penalty revenue credits in each of the above areas by transmission customer, total penalty revenues collected from Affiliates, total penalty revenues collected from non-Affiliates, a description of the costs incurred as a result of the offending behavior, and a summary of the portion of the unreserved

penalty revenue retained by the Transmission Provider. The annual compliance reports will be submitted on or before the Transmission Provider's deadline for submitting FERC Form-1, as established by the Commission's Office of Enforcement each year.

10 Force Majeure and Indemnification

10.1 Force Majeure:

An event of Force Majeure means any act of God, labor disturbance, act of the public enemy, war, insurrection, riot, fire, storm or flood, explosion, breakage or accident to machinery or equipment, any Curtailment, order, regulation or restriction imposed by governmental military or lawfully established civilian authorities, or any other cause beyond a Party's control. A Force Majeure event does not include an act of negligence or intentional wrongdoing. Neither the Transmission Provider nor the Transmission Customer will be considered in default as to any obligation under this Tariff if prevented from fulfilling the obligation due to an event of Force Majeure. However, a Party whose performance under this Tariff is hindered by an event of Force Majeure shall make all reasonable efforts to perform its obligations under this Tariff.

10.2 Indemnification:

The Transmission Customer shall at all times indemnify, defend, and save the Transmission Provider harmless from, any and all damages, losses, claims, including claims and actions relating to injury to or death of any person or damage to property, demands, suits, recoveries, costs and expenses, court costs, attorney fees, and all other obligations by or to third parties, arising out of or resulting from the Transmission Provider's performance of its obligations under this Tariff on behalf of the Transmission Customer, except in cases of negligence or intentional wrongdoing by the Transmission Provider.

11 Creditworthiness

The Transmission Provider will specify its Creditworthiness procedures in Attachment O.

12 Dispute Resolution Procedures

12.1 Internal Dispute Resolution Procedures:

Any dispute between a Transmission Customer and the Transmission Provider involving transmission service under the Tariff (excluding applications for rate changes or other changes to the Tariff, or to any Service Agreement entered into under the Tariff, which shall be presented directly to the Commission for resolution) shall be referred to a designated senior representative of the Transmission Provider and a senior representative of the Transmission Customer for resolution on an informal basis as promptly as practicable. In the event the designated representatives are unable to resolve the dispute within thirty (30) days, or such other period as the Parties may agree upon, by mutual agreement, such dispute may be submitted to arbitration and resolved in accordance with the arbitration procedures set forth below.

12.2 External Arbitration Procedures:

Any arbitration initiated under the Tariff shall be conducted before a single neutral arbitrator appointed by the Parties. If the Parties fail to agree upon a single arbitrator within ten (10) days of the referral of the dispute to arbitration, each Party shall choose one arbitrator who shall sit on a three-member arbitration panel. The two arbitrators so chosen shall within twenty (20) days select a third arbitrator to chair the arbitration panel. In either case, the arbitrators shall be knowledgeable in electric utility matters, including electric transmission and bulk power issues, and shall not have any current or past substantial business or financial relationships with any party to the arbitration (except prior arbitration). The arbitrator(s) shall provide each of the Parties an opportunity to be heard and,

except as otherwise provided herein, shall generally conduct the arbitration in accordance with the Commercial Arbitration Rules of the American Arbitration Association and any applicable Commission regulations or Regional Transmission Group rules.

12.3 Arbitration Decisions:

Unless otherwise agreed, the arbitrator(s) shall render a decision within ninety (90) days of appointment and shall notify the Parties in writing of such decision and the reasons therefor. The arbitrator(s) shall be authorized only to interpret and apply the provisions of the Tariff and any Service Agreement entered into under the Tariff and shall have no power to modify or change any of the above in any manner. The decision of the arbitrator(s) shall be final and binding upon the Parties, and judgment on the award may be entered in any court having jurisdiction. The decision of the arbitrator(s) may be appealed solely on the grounds that the conduct of the arbitrator(s), or the decision itself, violated the standards set forth in the Federal Arbitration Act and/or the Administrative Dispute Resolution Act. The final decision of the arbitrator must also be filed with the Commission if it affects jurisdictional rates, terms and conditions of service or facilities.

12.4 Costs:

Each Party shall be responsible for its own costs incurred during the arbitration process and for the following costs, if applicable:

(A) the cost of the arbitrator chosen by the Party to sit on the three member panel and one half of the cost of the third arbitrator chosen; or

(B) one half the cost of the single arbitrator jointly chosen by the Parties.

12.5 Rights Under The Federal Power Act:

Nothing in this section shall restrict the rights of any party to file a Complaint with the Commission under relevant provisions of the Federal Power Act.

12A Use of Consolidated Method of Accounting

12A.1 Use of Consolidated Method of Accounting: For the purpose of calculating the charges under the formula rates in this Tariff, the consolidated method of accounting will be used to account for the operations of Duke Energy Receivables Finance Company, LLC ("DERF"), Duke Energy Progress Receivables Company, LLC ("DEPR"), and Duke Energy Florida Receivables Company, LLC ("DEFR"), or any successor entities, subject to the following condition. It is a condition to such use of the consolidated method of accounting for calculating the charges under such rates during any year (or portion thereof) that such method is approved by the Commission for DERF, DEPR and DEFR for accounting and reporting (FERC Form 1) purposes for that year (or portion thereof).

II. POINT-TO-POINT TRANSMISSION SERVICE

Preamble

The Transmission Provider will provide Firm and Non-Firm Point-To-Point Transmission Service pursuant to the applicable terms and conditions of this Tariff. Point-To-Point Transmission Service is for the receipt of capacity and energy at designated Point(s) of Receipt and the transfer of such capacity and energy to designated Point(s) of Delivery.

13 Nature of Firm Point-To-Point Transmission Service

13.1 Term:

The minimum term of Firm Point-To-Point Transmission Service shall be one day and the maximum term shall be specified in the Service Agreement.

13.2 Reservation Priority:

(i) Long-Term Firm Point-To-Point Transmission Service shall be available on a first-come, first-served basis i.e., in the chronological sequence in which each Transmission Customer has requested service.

Because the Transmission Provider's business practices establish an earliest time by which requests for Long-Term Point-To-Point Transmission Service may be submitted (transmission reservation period), any requests for such service submitted within five minutes after that time shall be deemed to have been submitted simultaneously. Because the Transmission Provider's business practices establish a transmission reservation period for Network Resource designations that is the same as the transmission reservation period for Long-Term Firm Requests, such Network Resource designations requests made within the first five

minutes after the transmission reservation period opens also will be considered to have been submitted simultaneously with the Long-Term Firm Requests. If sufficient transfer capability is not available to meet all Long-Term Firm Requests and Network Resource designation requests that are considered to have been submitted simultaneously, available transfer capability first will be allocated based on pre-confirmation status (Pre-Confirmed or not Pre-Confirmed). If insufficient transfer capability is available to accommodate all Pre-Confirmed Applications, the available transfer capability will be allocated on a random lottery basis. If sufficient transfer capability is available to accommodate all Pre-Confirmed Applications but not enough to accommodate all other requests, then the Pre-Confirmed Applications will be accepted and all other requests will be allocated the remaining available transfer capability on a random lottery basis. The Transmission Provider shall post on its OASIS the allocation methodology and associated business practices.

(ii) Reservations for Short-Term Firm Point-To-Point Transmission Service will be conditional based upon the length of the requested transaction or reservation. However, Pre-Confirmed Applications for Short-Term Point-To-Point Transmission Service will receive priority over earlier-submitted requests that are not Pre-Confirmed and that have equal or shorter duration. Among requests or reservations with the same duration and, as relevant, pre-confirmation status (pre-confirmed, confirmed, or not confirmed), priority will be given to an Eligible Customer's request or

reservation that offers the highest price, followed by the date and time of the request or reservation.

(iii) If the Transmission System becomes oversubscribed, requests for service may preempt competing reservations up to the following conditional reservation deadlines: one day before the commencement of daily service, one week before the commencement of weekly service, and one month before the commencement of monthly service.

Before the conditional reservation deadline, if available transfer capability is insufficient to satisfy all requests and reservations, an Eligible Customer with a reservation for shorter term service or equal duration service and lower price has the right of first refusal to match any longer term request or equal duration service with a higher price before losing its reservation priority. A longer term competing request for Short-Term Firm Point-To-Point Transmission Service will be granted if the Eligible Customer with the right of first refusal does not agree to match the competing request within 24 hours (or earlier if necessary to comply with the scheduling deadlines provided in section 13.8) from being notified by the Transmission Provider of a longer-term competing request for Short-Term Firm Point-To-Point Transmission Service. When a longer duration request preempts multiple shorter duration reservations, the shorter duration reservations shall have simultaneous opportunities to exercise the right of first refusal. Duration, price and time of response will be used to determine the order by which multiple shorter duration reservations will

be able to exercise the right of first refusal. After the conditional reservation deadline, service will commence pursuant to the terms of Part II of the Tariff.

(iv) Firm Point-To-Point Transmission Service will always have a reservation priority over Non-Firm Point-To-Point Transmission Service under the Tariff. All Long-Term Firm Point-To-Point Transmission Service will have equal reservation priority with Native Load Customers and Network Customers. Reservation priorities for existing firm service customers are provided in Section 2.2.

Because the Transmission Provider's business practices establish an earliest time by which requests for Short-Term Firm Point-to-Point Transmission Service may be submitted, any requests for such service submitted within five minutes after that time shall be deemed to have been submitted simultaneously. If insufficient transfer capability is available to accommodate all such requests, after assigning priority to requests submitted within the simultaneous submission window based upon price, duration, and pre-confirmed status, the available transfer capability will be allocated to simultaneous, yet otherwise equivalent, requests based on a random lottery. The Transmission Provider shall post on its OASIS the allocation methodology and associated business practices.

13.3 Use of Firm Transmission Service by the Transmission Provider:

The Transmission Provider will be subject to the rates, terms and conditions of Part II of the Tariff when making Third-Party Sales under (i) agreements executed on or after July 9, 1996 or (ii) agreements executed prior to the

aforementioned date that the Commission requires to be unbundled, by the date specified by the Commission. The Transmission Provider will maintain separate accounting, pursuant to Section 8, for any use of the Point-To-Point Transmission Service to make Third-Party Sales.

13.4 Service Agreements:

The Transmission Provider shall offer a standard form Firm Point-To-Point Transmission Service Agreement (Attachment A) to an Eligible Customer when it submits a Completed Application for Long-Term Firm Point-To-Point Transmission Service. The Transmission Provider shall offer a standard form Firm Point-To-Point Transmission Service Agreement (Attachment A) to an Eligible Customer when it first submits a Completed Application for Short-Term Firm Point-To-Point Transmission Service pursuant to the Tariff. Executed Service Agreements that contain the information required under the Tariff shall be filed with the Commission in compliance with applicable Commission regulations. An Eligible Customer that uses Transmission Service at a Point of Receipt or Point of Delivery that it has not reserved and that has not executed a Service Agreement will be deemed, for purposes of assessing any appropriate charges and penalties, to have executed the appropriate Service Agreement. The Service Agreement shall, when applicable, specify any conditional curtailment options selected by the Transmission Customer. Where the Service Agreement contains conditional curtailment options and is subject to a biennial reassessment as described in Section 15.4, the Transmission Provider shall provide the Transmission Customer notice of any changes to the curtailment conditions no less than 90 days prior to the date for imposition of new curtailment conditions.

Concurrent with such notice, the Transmission Provider shall provide the Transmission Customer with the reassessment study and a narrative description of the study, including the reasons for changes to the number of hours per year or System Conditions under which conditional curtailment may occur.

13.5 Transmission Customer Obligations for Facility Additions or Redispatch Costs:

In cases where the Transmission Provider determines that the Transmission System is not capable of providing Firm Point-To-Point Transmission Service without (1) degrading or impairing the reliability of service to Native Load Customers, Network Customers, and other Transmission Customers taking Firm Point-To-Point Transmission Service, or (2) interfering with the Transmission Provider's ability to meet prior firm contractual commitments to others, the Transmission Provider will be obligated to expand or upgrade its Transmission System pursuant to the terms of Section 15.4. The Transmission Customer must agree to compensate the Transmission Provider for any necessary transmission facility additions pursuant to the terms of Section 27. To the extent the Transmission Provider can relieve any system constraint by redispatching the Transmission Provider's resources, it shall do so, provided that the Eligible Customer agrees to compensate the Transmission Provider pursuant to the terms of Section 27 and agrees to either (i) compensate the Transmission Provider for any necessary transmission facility additions or (ii) accept the service subject to a biennial reassessment by the Transmission Provider of redispatch requirements as described in Section 15.4. Any redispatch, Network Upgrade or Direct Assignment Facilities costs to be charged to the Transmission Customer on an

incremental basis under the Tariff will be specified in the Service Agreement prior to initiating service.

13.6 Curtailment of Firm Transmission Service:

In the event that a Curtailment on the Transmission Provider's Transmission System, or a portion thereof, is required to maintain reliable operation of such system and the systems directly and indirectly interconnected with Transmission Provider's Transmission System, Curtailments will be made on a non-discriminatory basis to the transaction(s) that effectively relieve the constraint. The Transmission Provider may elect to implement such Curtailments pursuant to the Transmission Loading Relief procedures specified in Attachment L. If multiple transactions require Curtailment, to the extent practicable and consistent with Good Utility Practice, the Transmission Provider will curtail service to Network Customers and Transmission Customers taking Firm Point-To-Point Transmission Service on a basis comparable to the curtailment of service to the Transmission Provider's Native Load Customers. All Curtailments will be made on a non-discriminatory basis; however, Non-Firm Point-To-Point Transmission Service shall be subordinate to Firm Transmission Service. Long-Term Firm Point-To-Point Service subject to conditions described in Section 15.4 shall be curtailed with secondary service in cases where the conditions apply, but otherwise will be curtailed on a pro rata basis with other Firm Transmission Service. When the Transmission Provider determines that an electrical emergency exists on its Transmission System and implements emergency procedures to Curtail Firm Transmission Service, the Transmission Customer shall make the required reductions upon request of the Transmission Provider.

However, the Transmission Provider reserves the right to Curtail, in whole or in part, any Firm Transmission Service provided under the Tariff when, in the Transmission Provider's sole discretion, an emergency or other unforeseen condition impairs or degrades the reliability of its Transmission System. The Transmission Provider will notify all affected Transmission Customers in a timely manner of any scheduled Curtailments.

In the DEP Zone and the DEF Zone, in the event a Transmission Customer fails to implement a Curtailment within ten minutes as required by the Transmission Provider, the Transmission Customer shall pay, in addition to any other charges for service, a charge equal to two times the amount of transmission service which the Transmission Customer fails to curtail multiplied by the maximum charge for Firm Point-To-Point Transmission Service for the lesser of the transaction term or one month.

13.7 Classification of Firm Transmission Service:

(a) The Transmission Customer taking Firm Point-To-Point Transmission Service may (1) change its Receipt and Delivery Points to obtain service on a non-firm basis consistent with the terms of Section 22.1 or (2) request a modification of the Points of Receipt or Delivery on a firm basis pursuant to the terms of Section 22.2.

(b) The Transmission Customer may purchase transmission service to make sales of capacity and energy from multiple generating units that are on the Transmission Provider's Transmission System. For such a purchase of transmission service, the resources will be designated as multiple Points of

Receipt, unless the multiple generating units are at the same generating plant in which case the units would be treated as a single Point of Receipt.

(c) The Transmission Provider shall provide firm deliveries of capacity and energy from the Point(s) of Receipt to the Point(s) of Delivery. Each Point of Receipt at which firm transmission capacity is reserved by the Transmission Customer shall be set forth in the Firm Point-To-Point Service Agreement for Long-Term Firm Transmission Service along with a corresponding capacity reservation associated with each Point of Receipt. Points of Receipt and corresponding capacity reservations shall be as mutually agreed upon by the Parties for Short-Term Firm Transmission. Each Point of Delivery at which firm transfer capability is reserved by the Transmission Customer shall be set forth in the Firm Point-To-Point Service Agreement for Long-Term Firm Transmission Service along with a corresponding capacity reservation associated with each Point of Delivery. Points of Delivery and corresponding capacity reservations shall be as mutually agreed upon by the Parties for Short-Term Firm Transmission. The greater of either (1) the sum of the capacity reservations at the Point(s) of Receipt, or (2) the sum of the capacity reservations at the Point(s) of Delivery shall be the Transmission Customer's Reserved Capacity. The Transmission Customer will be billed for its Reserved Capacity under the terms of Schedule 7. The Transmission Customer may not exceed its firm capacity reserved at each

Point of Receipt and each Point of Delivery except as otherwise specified in Section 22.

(d) In the event that the Transmission Customer (including Third-Party Sales by the Transmission Provider) exceeds its firm reserved capacity at any Point of Receipt or Point of Delivery, or uses Transmission Service at a Point of Receipt or Point of Delivery that it has not reserved, the Transmission Customer shall pay the rate for unauthorized use as specified in Schedule 7.

13.8 Scheduling of Firm Point-To-Point Transmission Service:

Schedules for the Transmission Customer's Firm Point-To-Point Transmission Service must be submitted to the Transmission Provider no later than 10:00 a.m. of the day prior to commencement of such service. Schedules submitted after 10:00 a.m. will be accommodated, if practicable. Hour-to-hour and intra-hour (four intervals consisting of fifteen minute schedules) schedules of any capacity and energy that is to be delivered must be stated in increments of 1,000 kW per hour. Transmission Customers within the Transmission Provider's service area with multiple requests for Transmission Service at a Point of Receipt, each of which is under 1,000 kW per hour, may consolidate their service requests at a common point of receipt into units of 1,000 kW per hour for scheduling and billing purposes. In the DEP Zone and in the DEC Zone scheduling changes will be permitted up to twenty (20) minutes before the start of the next clock hour provided that the Delivering Party and Receiving Party also agree to the schedule modification. In the DEC Zone, scheduling changes submitted less than twenty (20) minutes before the start of the next clock hour will be accommodated, if

practicable. In the DEF Zone, scheduling changes will be permitted up to ten (10) minutes before the start of the next clock hour provided that the Delivering Party and the Receiving Party also agree to the schedule modification and that the transaction can be reasonably accommodated on the Transmission System. The Transmission Provider will furnish to the Delivering Party's system operator, hour-to-hour and intra-hour schedules equal to those furnished by the Receiving Party (unless reduced for losses) and shall deliver the capacity and energy provided by such schedules. Should the Transmission Customer, Delivering Party or Receiving Party revise or terminate any schedule, such party shall immediately notify the Transmission Provider, and the Transmission Provider shall have the right to adjust accordingly the schedule for capacity and energy to be received and to be delivered.

14 Nature of Non-Firm Point-To-Point Transmission Service

14.1 Term:

Non-Firm Point-To-Point Transmission Service will be available for periods ranging from one (1) hour to one (1) month. However, a Purchaser of Non-Firm Point-To-Point Transmission Service will be entitled to reserve a sequential term of service (such as a sequential monthly term without having to wait for the initial term to expire before requesting another monthly term) so that the total time period for which the reservation applies is greater than one month, subject to the requirements of Section 18.3.

14.2 Reservation Priority:

Non-Firm Point-To-Point Transmission Service shall be available from transfer capability in excess of that needed for reliable service to Native Load Customers, Network Customers and other Transmission Customers taking Long-Term and Short-Term Firm Point-To-Point Transmission Service. A higher priority will be assigned first to requests or reservations with a longer duration of service, and second to Pre-Confirmed Applications. In the event the Transmission System is constrained, competing requests of the same Pre-Confirmation status and equal duration will be prioritized based on the highest price offered by the Eligible Customer for the Transmission Service. Eligible Customers that have already reserved shorter term service have the right of first refusal to match any longer term request before being preempted. A longer term competing request for Non-Firm Point-To-Point Transmission Service will be granted if the Eligible Customer with the right of first refusal does not agree to match the competing request: (a) immediately for hourly Non- Firm Point-To-Point Transmission

Service after notification by the Transmission Provider; and, (b) within 24 hours (or earlier if necessary to comply with the scheduling deadlines provided in section 14.6) for Non-Firm Point-To-Point Transmission Service other than hourly transactions after notification by the Transmission Provider. Transmission service for Network Customers from resources other than designated Network Resources will have a higher priority than any Non-Firm Point-To-Point Transmission Service. Non-Firm Point-To-Point Transmission Service over secondary Point(s) of Receipt and Point(s) of Delivery will have the lowest reservation priority under the Tariff.

14.3 Use of Non-Firm Point-To-Point Transmission Service by the Transmission Provider:

The Transmission Provider will be subject to the rates, terms and conditions of Part II of the Tariff when making Third-Party Sales under (i) agreements executed on or after July 9, 1996 or (ii) agreements executed prior to the aforementioned date that the Commission requires to be unbundled, by the date specified by the Commission. The Transmission Provider will maintain separate accounting, pursuant to Section 8, for any use of Non-Firm Point-To-Point Transmission Service to make Third-Party Sales.

14.4 Service Agreements:

The Transmission Provider shall offer a standard form Non-Firm Point-To-Point Transmission Service Agreement (Attachment B) to an Eligible Customer when it first submits a Completed Application for Non-Firm Point-To-Point Transmission Service pursuant to the Tariff. Executed Service Agreements that contain the

information required under the Tariff shall be filed with the Commission in compliance with applicable Commission regulations.

14.5 Classification of Non-Firm Point-To-Point Transmission Service:

Non-Firm Point-To-Point Transmission Service shall be offered under terms and conditions contained in Part II of the Tariff. The Transmission Provider undertakes no obligation under the Tariff to plan its Transmission System in order to have sufficient capacity for Non-Firm Point-To-Point Transmission Service. Parties requesting Non-Firm Point-To-Point Transmission Service for the transmission of firm power do so with the full realization that such service is subject to availability and to Curtailment or Interruption under the terms of the Tariff. In the event that the Transmission Customer (including Third-Party Sales by the Transmission Provider) exceeds its non-firm Reserved Capacity at any Point of Receipt and/or Point of Delivery, the Transmission Customer shall pay the rate for unauthorized use as specified in Schedule 8. Non-Firm Point-To-Point Transmission Service shall include transmission of energy on an hourly basis and transmission of scheduled short-term capacity and energy on a daily, weekly or monthly basis, but not to exceed one month's reservation for any one Application, under Schedule 8.

14.6 Scheduling of Non-Firm Point-To-Point Transmission Service:

Schedules for Non-Firm Point-To-Point Transmission Service in the DEP Zone or in the DEC Zone must be submitted to the Transmission Provider no later than 2:00 p.m. of the day prior to commencement of such service. Schedules for Non-Firm Point-To-Point Transmission Service in the DEF Zone must be submitted to the Transmission Provider no later than fifteen (15) minutes before the scheduled

start of hourly transactions or one hour prior to the scheduled start of longer-term transactions. Schedules submitted after such times will be accommodated, if practicable. Hour-to-hour and intra-hour (four intervals consisting of fifteen minute schedules) schedules of energy that is to be delivered must be stated in increments of 1,000 kW per hour. Transmission Customers within the Transmission Provider's service area with multiple requests for Transmission Service at a Point of Receipt, each of which is under 1,000 kW per hour, may consolidate their schedules at a common Point of Receipt into units of 1,000 kW per hour. In the DEP Zone and in the DEC Zone scheduling changes will be permitted up to twenty (20) minutes before the start of the next clock hour provided that the Delivering Party and Receiving Party also agree to the schedule modification. In the DEC Zone, scheduling changes submitted less than twenty (20) minutes before the start of the next clock hour will be accommodated, if practicable. In the DEF Zone scheduling changes will be permitted up to ten (10) minutes before the start of the next clock hour provided that the Delivering Party and the Receiving Party also agree to the schedule modification and that the transaction can be reasonably accommodated on the Transmission System. The Transmission Provider will furnish to the Delivering Party's system operator, hour-to-hour and intra-hour schedules equal to those furnished by the Receiving Party (unless reduced for losses) and shall deliver the capacity and energy provided by such schedules. Should the Transmission Customer, Delivering Party or Receiving Party revise or terminate any schedule, such party shall immediately notify the Transmission Provider, and the Transmission Provider shall have the

right to adjust accordingly the schedule for capacity and energy to be received and to be delivered.

14.7 Curtailment or Interruption of Service:

The Transmission Provider reserves the right to Curtail, in whole or in part, Non-Firm Point-To-Point Transmission Service provided under the Tariff for reliability reasons when an emergency or other unforeseen condition threatens to impair or degrade the reliability of its Transmission System or the systems directly or indirectly interconnected with Transmission Provider's Transmission System. The Transmission Provider may elect to implement such Curtailments pursuant to the Transmission Loading Relief procedures specified in Attachment L. The Transmission Provider reserves the right to Interrupt, in whole or in part, Non-Firm Point-To-Point Transmission Service provided under the Tariff for economic reasons in order to accommodate (1) a request for Firm Transmission Service, (2) a request for Non-Firm Point-To-Point Transmission Service of greater duration, (3) a request for Non-Firm Point-To-Point Transmission Service of equal duration with a higher price, (4) transmission service for Network Customers from non-designated resources, or (5) transmission service for Firm Point-To-Point Transmission Service during conditional curtailment periods as described in Section 15.4. The Transmission Provider also will discontinue or reduce service to the Transmission Customer to the extent that deliveries for transmission are discontinued or reduced at the Point(s) of Receipt. Where required, Curtailments or Interruptions will be made on a non-discriminatory basis to the transaction(s) that effectively relieve the constraint; however, Non-Firm Point-To-Point Transmission Service shall be subordinate to Firm

Transmission Service. If multiple transactions require Curtailment or Interruption, to the extent practicable and consistent with Good Utility Practice, Curtailments or Interruptions will be made to transactions of the shortest term (e.g., hourly non-firm transactions will be Curtailed or Interrupted before daily non-firm transactions and daily non-firm transactions will be Curtailed or Interrupted before weekly non-firm transactions). Transmission service for Network Customers from resources other than designated Network Resources will have a higher priority than any Non-Firm Point-To-Point Transmission Service under the Tariff. Non-Firm Point-To-Point Transmission Service over secondary Point(s) of Receipt and Point(s) of Delivery will have a lower priority than any Non-Firm Point-To-Point Transmission Service under the Tariff. Non-Firm Energy Exchange Transmission Service will have the lowest priority in the DEC Zone, DEP Zone, and DEF Zone. The Transmission Provider will provide advance notice of Curtailment or Interruption where such notice can be provided consistent with Good Utility Practice. In the DEP Zone and the DEF Zone, in the event a Transmission Customer fails to implement a Curtailment within ten minutes or Interruption within twenty minutes as required by the Transmission Provider, the Transmission Customer shall pay, in addition to any other charges for service, a charge equal to two times the amount of transmission service which the Transmission Customer fails to curtail or interrupt multiplied by the maximum charge for Firm Point-To-Point Transmission Service for the lesser of the transaction term or one month.

15 Service Availability

15.1 General Conditions:

The Transmission Provider will provide Firm and Non-Firm Point-To-Point Transmission Service over, on or across its Transmission System to any Transmission Customer that has met the requirements of Section 16.

15.2 Determination of Available Transfer Capability:

A description of the Transmission Provider's specific methodology for assessing available transfer capability posted on the relevant Transmission Provider's OASIS (Section 4) is contained in Attachment C-1 (DEC and DEP Zones) and Attachment C-2

(DEF Zone) as applicable, of the Tariff. In the event sufficient transfer capability may not exist to accommodate a service request, the Transmission Provider will respond by performing a System Impact Study.

15.3 Initiating Service in the Absence of an Executed Service Agreement:

If the Transmission Provider and the Transmission Customer requesting Firm or Non-Firm Point-To-Point Transmission Service cannot agree on all the terms and conditions of the Point-To-Point Service Agreement, the Transmission Provider shall file with the Commission, within thirty (30) days after the date the Transmission Customer provides written notification directing the Transmission Provider to file, an unexecuted Point-To-Point Service Agreement containing terms and conditions deemed appropriate by the Transmission Provider for such requested Transmission Service. The Transmission Provider shall commence providing Transmission Service subject to the Transmission Customer agreeing to (i) compensate the Transmission Provider at whatever rate the Commission

ultimately determines to be just and reasonable, and (ii) comply with the terms and conditions of the Tariff including posting appropriate security deposits in accordance with the terms of Section 17.3.

15.4 Obligation to Provide Transmission Service That Requires Expansion or Modification of the Transmission System, Redispatch or Conditional Curtailment:

(a) If the Transmission Provider determines that it cannot accommodate a Completed Application for Firm Point-To-Point Transmission Service because of insufficient capability on its Transmission System, the Transmission Provider will use due diligence to expand or modify its Transmission System to provide the requested Firm Transmission Service, consistent with its planning obligations in Attachment N-1 (DEP Zone and DEC Zone) or Attachment N-2 (DEF Zone), as applicable, provided the Transmission Customer agrees to compensate the Transmission Provider for such costs pursuant to the terms of Section 27. The Transmission Provider will conform to Good Utility Practice and its planning obligations in Attachment N-1 or Attachment N-2, as applicable, in determining the need for new facilities and in the design and construction of such facilities. The obligation applies only to those facilities that the Transmission Provider has the right to expand or modify.

(b) If the Transmission Provider determines that it cannot accommodate a Completed Application for Long-Term Firm Point-To-Point Transmission Service because of insufficient capability on its Transmission System, the Transmission Provider will use due diligence to provide redispatch from its own resources until (i) Network Upgrades are completed for the

Transmission Customer, (ii) the Transmission Provider determines through a biennial reassessment that it can no longer reliably provide the redispatch, or (iii) the Transmission Customer terminates the service because of redispatch changes resulting from the reassessment. A Transmission Provider shall not unreasonably deny self-provided redispatch or redispatch arranged by the Transmission Customer from a third party resource.

(c) If the Transmission Provider determines that it cannot accommodate a Completed Application for Long-Term Firm Point-To-Point Transmission Service because of insufficient capability on its Transmission System, the Transmission Provider will offer the Firm Transmission Service with the condition that the Transmission Provider may curtail the service prior to the curtailment of other Firm Transmission Service for a specified number of hours per year or during System Condition(s). If the Transmission Customer accepts the service, the Transmission Provider will use due diligence to provide the service until (i) Network Upgrades are completed for the Transmission Customer, (ii) the Transmission Provider determines through a biennial reassessment that it can no longer reliably provide such service, or (iii) the Transmission Customer terminates the service because the reassessment increased the number of hours per year of conditional curtailment or changed the System Conditions.

15.5 Deferral of Service:

The Transmission Provider may defer providing service until it completes construction of new transmission facilities or upgrades needed to provide Firm

Point-To-Point Transmission Service whenever the Transmission Provider determines that providing the requested service would, without such new facilities or upgrades, impair or degrade reliability to any existing firm services.

15.6 Other Transmission Service Schedules:

Eligible Customers receiving transmission service under other agreements on file with the Commission may continue to receive transmission service under those agreements until such time as those agreements may be modified by the Commission.

15.7 Real Power Losses:

Real Power Losses are associated with all transmission service. The Transmission Provider is not obligated to provide Real Power Losses. The Transmission Customer is responsible for replacing losses associated with all transmission service as calculated by the Transmission Provider.

For services provided on and after June 1, 2019, effective as of June 1, 2019 and thereafter on an annual basis the applicable Real Power Loss factor in the DEP Zone shall be calculated in accordance with the methodology for doing so set forth in Attachment W and in accordance with Section 1.l of Attachment H.2, DEP Formula Rate Implementation Protocols.

The applicable Real Power Loss factors in the DEF Zone are 1.18% for delivery at transmission voltages and 2.18% for delivery at distribution voltages. Procedures for annual changes to the Real Power Loss factors in the DEF Zone are set out in Attachment Q.

The applicable Real Power loss factors in the DEC Zone are as follows: For

services provided on and after June 1, 2019, effective as of June 1, 2019 and thereafter on an annual basis the loss factor used to determine the amount of losses associated with the use of facilities at or above 44 kV shall be calculated in accordance with the methodology for doing so set forth in Attachment W and in accordance with Section 2(j) of Exhibit A to Schedule 10-B, Formula Rate Implementation Protocols. In the DEC, DEP and DEF Zones, the Transmission Provider and Transmission Customer may agree to have the Transmission Provider supply the capacity and/or energy necessary to compensate for losses in accordance with Schedule 9.

16 Transmission Customer Responsibilities

16.1 Conditions Required of Transmission Customers:

Point-To-Point Transmission Service shall be provided by the Transmission Provider only if the following conditions are satisfied by the Transmission Customer:

a. The Transmission Customer has pending a Completed Application for service;

b. The Transmission Customer meets the creditworthiness criteria set forth in Attachment O;

c. The Transmission Customer will have arrangements in place for any other transmission service necessary to effect the delivery from the generating source to the Transmission Provider prior to the time service under Part II of the Tariff commences;

d. The Transmission Customer agrees to pay for any facilities constructed and chargeable to such Transmission Customer under Part II of the Tariff, whether or not the Transmission Customer takes service for the full term of its reservation;

e. The Transmission Customer provides the information required by the Transmission Provider's planning process established in Attachment N-1 or Attachment N-2, as applicable; and

f. The Transmission Customer has executed a Point-To-Point Service Agreement or has agreed to receive service pursuant to Section 15.3.

16.2 Transmission Customer Responsibility for Third-Party Arrangements:

Any scheduling arrangements that may be required by other electric systems shall be the responsibility of the Transmission Customer requesting service. The Transmission Customer shall provide, unless waived by the Transmission Provider, notification to the Transmission Provider identifying such systems and authorizing them to schedule the capacity and energy to be transmitted by the Transmission Provider pursuant to Part II of the Tariff on behalf of the Receiving Party at the Point of Delivery or the Delivering Party at the Point of Receipt. However, the Transmission Provider will undertake reasonable efforts to assist the Transmission Customer in making such arrangements, including without limitation, providing any information or data required by such other electric system pursuant to Good Utility Practice.

17 Procedures for Arranging Firm Point-To-Point Transmission Service

17.1 Application:

A request for Firm Point-To-Point Transmission Service for periods of one year or longer must be made on the OASIS of the Transmission Provider of each affected Zone. Such Application[s] must be submitted at least sixty (60) days in advance of the calendar month in which service is to commence. The Transmission Provider will consider requests for such firm service on shorter notice when feasible. Requests for firm service for periods of less than one year shall be subject to expedited procedures that shall be negotiated between the Parties within the time constraints provided in Section 17.5. All Firm Point-To-Point Transmission Service requests should be submitted by entering the information listed below on the OASIS for each affected Zone.

17.2 Completed Application:

A Completed Application shall provide all of the information included in 18 C.F.R. § 2.20 including but not limited to the following:

(i) The identity, address, telephone number and facsimile number of the entity requesting service;

(ii) A statement that the entity requesting service is, or will be upon commencement of service, an Eligible Customer under the Tariff;

(iii) The location of the Point(s) of Receipt and Point(s) of Delivery and the identities of the Delivering Parties and the Receiving Parties;

(iv) The location of the generating facility(ies) supplying the capacity and energy and the location of the load ultimately served by the capacity and energy transmitted. The Transmission Provider will treat this information as confidential except to the extent that disclosure of this information is required by this Tariff, by regulatory or judicial order, for reliability purposes pursuant to Good Utility Practice or pursuant to RTG transmission information sharing agreements. The Transmission Provider

shall treat this information consistent with the standards of conduct contained in Part 37 of the Commission's regulations;

(v) A description of the supply characteristics of the capacity and energy to be delivered;

(vi) An estimate of the capacity and energy expected to be delivered to the Receiving Party;

(vii) The Service Commencement Date and the term of the requested Transmission Service;

(viii) The transmission capacity requested for each Point of Receipt and each Point of Delivery on the Transmission Provider's Transmission System; customers may combine their requests for service in order to satisfy the minimum transmission capacity requirement;

(ix) A statement indicating that, if the Eligible Customer submits a Pre-Confirmed Application, the Eligible Customer will execute a Service Agreement upon receipt of notification that the Transmission Provider can provide the requested Transmission Service; and

(x) Any additional information required by the Transmission Provider's planning process established in Attachment N-1 or Attachment N-2, as applicable.

The Transmission Provider shall treat this information consistent with the standards of conduct contained in Part 37 of the Commission's regulations.

17.3 Deposit:

A Completed Application for Firm Point-To-Point Transmission Service also shall include a deposit of either one month's charge for Reserved Capacity or the full charge for Reserved Capacity for service requests of less than one month. If the Application is rejected by the Transmission Provider because it does not meet the conditions for service as set forth herein, or in the case of requests for service arising in connection with losing bidders in a Request For Proposals (RFP), said deposit shall be returned with interest less any reasonable costs incurred by the Transmission Provider in connection with the review of the losing bidder's

Application. The deposit also will be returned with interest less any reasonable costs incurred by the Transmission Provider if the Transmission Provider is unable to complete new facilities needed to provide the service. If an Application is withdrawn or the Eligible Customer decides not to enter into a Service Agreement for Firm Point-To-Point Transmission Service, the deposit shall be refunded in full, with interest, less reasonable costs incurred by the Transmission Provider to the extent such costs have not already been recovered by the Transmission Provider from the Eligible Customer. The Transmission Provider will provide to the Eligible Customer a complete accounting of all costs deducted from the refunded deposit, which the Eligible Customer may contest if there is a dispute concerning the deducted costs. Deposits associated with construction of new facilities are subject to the provisions of Section 19. If a Service Agreement for Firm Point-To-Point Transmission Service is executed, the deposit, with interest, will be returned to the Transmission Customer upon expiration or termination of the Service Agreement for Firm Point-To-Point Transmission Service. Applicable interest shall be computed in accordance with the Commission's regulations at 18 C.F.R. § 35.19a(a)(2)(iii), and shall be calculated from the day the deposit check is credited to the Transmission Provider's account. Notwithstanding the foregoing, the Transmission Provider shall on a non-discriminatory basis waive the requirement that a deposit accompany an Application for an Eligible Customer that has met the necessary conditions of Attachment O of this Tariff.

17.4 Notice of Deficient Application:

If an Application fails to meet the requirements of the Tariff, the Transmission Provider shall notify the entity requesting service within fifteen (15) days of receipt of the reasons for such failure. The Transmission Provider will attempt to remedy minor deficiencies in the Application through informal communications with the Eligible Customer. If such efforts are unsuccessful, the Transmission Provider shall return the Application, along with any deposit, with interest. Upon receipt of a new or revised Application that fully complies with the requirements of Part II of the Tariff, the Eligible Customer shall be assigned a new priority consistent with the date of the new or revised Application.

17.5 Response to a Completed Application:

Following receipt of a Completed Application for Firm Point-To-Point Transmission Service, the Transmission Provider shall make a determination of available transfer capability as required in Section 15.2. The Transmission Provider shall notify the Eligible Customer as soon as practicable, but not later than thirty (30) days after the date of receipt of a Completed Application either (i) if it will be able to provide service without performing a System Impact Study or (ii) if such a study is needed to evaluate the impact of the Application pursuant to Section 19.1. Responses by the Transmission Provider must be made as soon as practicable to all completed applications (including applications by its own merchant function) and the timing of such responses must be made on a non-discriminatory basis.

17.6 Execution of Service Agreement:

Whenever the Transmission Provider determines that a System Impact Study is not required and that the service can be provided, it shall notify the Eligible Customer as soon as practicable but no later than thirty (30) days after receipt of the Completed Application. Where a System Impact Study is required, the provisions of Section 19 will govern the execution of a Service Agreement. Failure of an Eligible Customer to execute and return the Service Agreement or request the filing of an unexecuted service agreement pursuant to Section 15.3, within fifteen (15) days after it is tendered by the Transmission Provider will be deemed a withdrawal and termination of the Application and any deposit submitted shall be refunded with interest. Nothing herein limits the right of an Eligible Customer to file another Application after such withdrawal and termination.

17.7 Extensions for Commencement of Service:

The Transmission Customer can obtain, subject to availability, up to <u>five (5) one-year extensions</u> for the commencement of service. The Transmission Customer may postpone service by paying a non-refundable annual reservation fee equal to one-month's charge for Firm Transmission Service for each year or fraction thereof within 15 days of notifying the Transmission Provider it intends to extend the commencement of service. If during any extension for the commencement of service an Eligible Customer submits a Completed Application for Firm Transmission Service, and such request can be satisfied only by releasing all or part of the Transmission Customer's Reserved Capacity, the original Reserved Capacity will be released unless the following condition is satisfied. Within thirty

(30) days, the original Transmission Customer agrees to pay the Firm Point-To-Point transmission rate for its Reserved Capacity concurrent with the new Service Commencement Date. In the event the Transmission Customer elects to release the Reserved Capacity, the reservation fees or portions thereof previously paid will be forfeited.

18 Procedures for Arranging Non-Firm Point-To-Point Transmission Service

18.1 Application:

Eligible Customers seeking Non-Firm Point-To-Point Transmission Service must submit a Completed Application to the Transmission Provider. Applications should be submitted by entering the information listed below on the Transmission Provider's OASIS.

18.2 Completed Application:

A Completed Application shall provide all of the information included in 18 C.F.R. § 2.20 including but not limited to the following:

(i) The identity, address, telephone number and facsimile number of the entity requesting service;

(ii) A statement that the entity requesting service is, or will be upon commencement of service, an Eligible Customer under the Tariff;

(iii) The Point(s) of Receipt and the Point(s) of Delivery;

(iv) The maximum amount of capacity requested at each Point of Receipt and Point of Delivery; and

(v) The proposed dates and hours for initiating and terminating transmission service hereunder.

In addition to the information specified above, when required to properly evaluate system conditions, the Transmission Provider also may ask the Transmission Customer to provide the following:

(vi) The electrical location of the initial source of the power to be transmitted pursuant to the Transmission Customer's request for service; and

(vii) The electrical location of the ultimate load.

The Transmission Provider will treat this information in (vi) and (vii) as confidential at the request of the Transmission Customer except to the extent that

disclosure of this information is required by this Tariff, by regulatory or judicial order, for reliability purposes pursuant to Good Utility Practice, or pursuant to RTG transmission information sharing agreements. The Transmission Provider shall treat this information consistent with the standards of conduct contained in Part 37 of the Commission's regulations.

(viii) A statement indicating that, if the Eligible Customer submits a Pre-Confirmed Application, the Eligible Customer will execute a Service Agreement upon receipt of notification that the Transmission Provider can provide the requested Transmission Service.

18.3 Reservation of Non-Firm Point-To-Point Transmission Service:

Requests for monthly service shall be submitted no earlier than sixty (60) days before service is to commence; requests for weekly service shall be submitted no earlier than fourteen (14) days before service is to commence, requests for daily service shall be submitted no earlier than two (2) days before service is to commence, and requests for hourly service shall be submitted no earlier than noon the day before service is to commence. Requests for service in the DEP Zone and requests for service in the DEC Zone received later than 2:00 p.m. prior to the day service is scheduled to commence will be accommodated if practicable. Requests for service in the DEF Zone received later than 15 minutes before the scheduled start of hourly service or twelve noon prior to the day longer term service is scheduled to commence will be accommodated if practicable.

18.4 Determination of Available Transfer Capability:

Following receipt of a tendered schedule the Transmission Provider will make a determination on a non-discriminatory basis of available transfer capability pursuant to Section 15.2. Such determination shall be made as soon as reasonably

practicable after receipt, but not later than the following time periods for the following terms of service: (i) in the DEP Zone and in the DEC Zone, thirty (30) minutes for hourly service, and in the DEF Zone, prior to the requested start of the transaction for hourly service; (ii) in all Zones, thirty (30) minutes for daily service; (iii) in all Zones, four (4) hours for weekly service; and (iv) in all Zones, two (2) days for monthly service.

19 Additional Study Procedures For Firm Point-To-Point Transmission Service Requests

19.1 Notice of Need for System Impact Study:

After receiving a request for service, the Transmission Provider shall determine on a non-discriminatory basis whether a System Impact Study is needed. A description of the Transmission Provider's methodology for completing a System Impact Study is provided in Attachment D. If the Transmission Provider determines that a System Impact Study is necessary to accommodate the requested service, it shall so inform the Eligible Customer, as soon as practicable. Once informed, the Eligible Customer shall timely notify the Transmission Provider if it elects to have the Transmission Provider study redispatch or conditional curtailment as part of the System Impact Study. If notification is provided prior to tender of the System Impact Study Agreement, the Eligible Customer can avoid the costs associated with the study of these options. The Transmission Provider shall within thirty (30) days of receipt of a Completed Application, tender a System Impact Study Agreement pursuant to which the Eligible Customer shall agree to reimburse the Transmission Provider for performing the required System Impact Study. For a service request to remain a Completed Application, the Eligible Customer shall execute the System Impact Study Agreement and return it to the Transmission Provider within fifteen (15) days. If the Eligible Customer elects not to execute the System Impact Study Agreement, its application shall be deemed withdrawn and its deposit, pursuant to Section 17.3, shall be returned with interest.

19.2 System Impact Study Agreement and Cost Reimbursement:

(i) The System Impact Study Agreement will clearly specify the Transmission Provider's estimate of the actual cost, and time for completion of the System Impact Study. The charge shall not exceed the actual cost of the study. In performing the System Impact Study, the Transmission Provider shall rely, to the extent reasonably practicable, on existing transmission planning studies. The Eligible Customer will not be assessed a charge for such existing studies; however, the Eligible Customer will be responsible for charges associated with any modifications to existing planning studies that are reasonably necessary to evaluate the impact of the Eligible Customer's request for service on the Transmission System.

(ii) If in response to multiple Eligible Customers requesting service in relation to the same competitive solicitation, a single System Impact Study is sufficient for the Transmission Provider to accommodate the requests for service, the costs of that study shall be pro-rated among the Eligible Customers.

(iii) For System Impact Studies that the Transmission Provider conducts on its own behalf, the Transmission Provider shall record the cost of the System Impact Studies pursuant to Section 20.

19.3 System Impact Study Procedures:

Upon receipt of an executed System Impact Study Agreement, the Transmission Provider will use due diligence to complete the required System Impact Study within a sixty (60) day period. The System Impact Study shall identify (1) any

system constraints identified with specificity by transmission element or flowgate, (2) redispatch options (when requested by an Eligible Customer) including an estimate of the cost of redispatch, (3) conditional curtailment options (when requested by an Eligible Customer) including the number of hours per year and the System Conditions during which conditional curtailment may occur, and (4) additional Direct Assignment Facilities or Network Upgrades required to provide the requested service. For customers requesting the study of redispatch options, the System Impact Study shall (1) identify all resources located within the Transmission Provider's Control Area that can significantly contribute toward relieving the system constraint and (2) provide a measurement of each resource's impact on the system constraint. If the Transmission Provider possesses information indicating that any resource outside its Control Area could relieve the constraint, it shall identify each such resource in the System Impact Study. In the event that the Transmission Provider is unable to complete the required System Impact Study within such time period, it shall so notify the Eligible Customer and provide an estimated completion date along with an explanation of the reasons why additional time is required to complete the required studies. A copy of the completed System Impact Study and related work papers shall be made available to the Eligible Customer as soon as the System Impact Study is complete. The Transmission Provider will use the same due diligence in completing the System Impact Study for an Eligible Customer as it uses when completing studies for itself. The Transmission Provider shall notify the Eligible Customer immediately upon completion of the System Impact Study if the Transmission System will be

adequate to accommodate all or part of a request for service or that no costs are likely to be incurred for new transmission facilities or upgrades. In order for a request to remain a Completed Application, within fifteen (15) days of completion of the System Impact Study the Eligible Customer must execute a Service Agreement or request the filing of an unexecuted Service Agreement pursuant to Section 15.3, or the Application shall be deemed terminated and withdrawn.

19.4 Facilities Study Procedures:

If a System Impact Study indicates that additions or upgrades to the Transmission System are needed to supply the Eligible Customer's service request, the Transmission Provider, within thirty (30) days of the completion of the System Impact Study, shall tender to the Eligible Customer a Facilities Study Agreement pursuant to which the Eligible Customer shall agree to reimburse the Transmission Provider for performing the required Facilities Study. For a service request to remain a Completed Application, the Eligible Customer shall execute the Facilities Study Agreement and return it to the Transmission Provider within fifteen (15) days. If the Eligible Customer elects not to execute the Facilities Study Agreement, its application shall be deemed withdrawn and its deposit, pursuant to Section 17.3, shall be returned with interest. Upon receipt of an executed Facilities Study Agreement, the Transmission Provider will use due diligence to complete the required Facilities Study within a sixty (60) day period. If the Transmission Provider is unable to complete the Facilities Study in the allotted time period, the Transmission Provider shall notify the Transmission Customer and provide an estimate of the time needed to reach a final determination along with an explanation of the reasons that additional time is

required to complete the study. When completed, the Facilities Study will include a good faith estimate of (i) the cost of Direct Assignment Facilities to be charged to the Transmission Customer, (ii) the Transmission Customer's appropriate share of the cost of any required Network Upgrades as determined pursuant to the provisions of Part II of the Tariff, and (iii) the time required to complete such construction and initiate the requested service. The Transmission Customer shall provide the Transmission Provider with a letter of credit or other reasonable form of security acceptable to the Transmission Provider equivalent to the costs of new facilities or upgrades consistent with commercial practices as established by the Uniform Commercial Code. The Transmission Customer shall have thirty (30) days to execute a Service Agreement or request the filing of an unexecuted Service Agreement and provide the required letter of credit or other form of security or the request will no longer be a Completed Application and shall be deemed terminated and withdrawn.

19.5 Facilities Study Modifications:

Any change in design arising from inability to site or construct facilities as proposed will require development of a revised good faith estimate. New good faith estimates also will be required in the event of new statutory or regulatory requirements that are effective before the completion of construction or other circumstances beyond the control of the Transmission Provider that significantly affect the final cost of new facilities or upgrades to be charged to the Transmission Customer pursuant to the provisions of Part II of the Tariff.

19.6 Due Diligence in Completing New Facilities:

The Transmission Provider shall use due diligence to add necessary facilities or upgrade its Transmission System within a reasonable time. The Transmission Provider will not upgrade its existing or planned Transmission System in order to provide the requested Firm Point-To-Point Transmission Service if doing so would impair system reliability or otherwise impair or degrade existing firm service.

19.7 Partial Interim Service:

If the Transmission Provider determines that it will not have adequate transfer capability to satisfy the full amount of a Completed Application for Firm Point-To-Point Transmission Service, the Transmission Provider nonetheless shall be obligated to offer and provide the portion of the requested Firm Point-To-Point Transmission Service that can be accommodated without addition of any facilities and through redispatch. However, the Transmission Provider shall not be obligated to provide the incremental amount of requested Firm Point-To-Point Transmission Service that requires the addition of facilities or upgrades to the Transmission System until such facilities or upgrades have been placed in service.

19.8 Expedited Procedures for New Facilities:

In lieu of the procedures set forth above, the Eligible Customer shall have the option to expedite the process by requesting the Transmission Provider to tender at one time, together with the results of required studies, an "Expedited Service Agreement" pursuant to which the Eligible Customer would agree to compensate the Transmission Provider for all costs incurred pursuant to the terms of the Tariff. In order to exercise this option, the Eligible Customer shall request in

writing an expedited Service Agreement covering all of the above-specified items within thirty (30) days of receiving the results of the System Impact Study identifying needed facility additions or upgrades or costs incurred in providing the requested service. While the Transmission Provider agrees to provide the Eligible Customer with its best estimate of the new facility costs and other charges that may be incurred, such estimate shall not be binding and the Eligible Customer must agree in writing to compensate the Transmission Provider for all costs incurred pursuant to the provisions of the Tariff. The Eligible Customer shall execute and return such an Expedited Service Agreement within fifteen (15) days of its receipt or the Eligible Customer's request for service will cease to be a Completed Application and will be deemed terminated and withdrawn.

19.9 Penalties for Failure to Meet Study Deadlines:

Sections 19.3 and 19.4 require a Transmission Provider to use due diligence to meet 60-day study completion deadlines for System Impact Studies and Facilities Studies.

(i) The Transmission Provider is required to file a notice with the Commission in the event that more than twenty (20) percent of non-Affiliates' System Impact Studies and Facilities Studies completed by the Transmission Provider in any two consecutive calendar quarters are not completed within the 60-day study completion deadlines. Such notice must be filed within thirty (30) days of the end of the calendar quarter triggering the notice requirement.

(ii) For the purposes of calculating the percent of non-Affiliates' System Impact Studies and Facilities Studies processed outside of the 60-day

study completion deadlines, the Transmission Provider shall consider all System Impact Studies and Facilities Studies that it completes for non-Affiliates during the calendar quarter. The percentage should be calculated by dividing the number of those studies which are completed on time by the total number of completed studies. The Transmission Provider may provide an explanation in its notification filing to the Commission if it believes there are extenuating circumstances that prevented it from meeting the 60-day study completion deadlines.

(iii) The Transmission Provider is subject to an operational penalty if it completes ten (10) percent or more of non-Affiliates' System Impact Studies and Facilities Studies outside of the 60-day study completion deadlines for each of the two calendar quarters immediately following the quarter that triggered its notification filing to the Commission. The operational penalty will be assessed for each calendar quarter for which an operational penalty applies, starting with the calendar quarter immediately following the quarter that triggered the Transmission Provider's notification filing to the Commission. The operational penalty will continue to be assessed each quarter until the Transmission Provider completes at least ninety (90) percent of all non-Affiliates' System Impact Studies and Facilities Studies within the 60-day deadline.

(iv) For penalties assessed in accordance with subsection (iii) above, the penalty amount for each System Impact Study or Facilities Study shall be equal to $500 for each day the Transmission Provider takes to complete that study beyond the 60-day deadline.

19.10 Credits for Late Study Penalty Revenues:

The Transmission Provider will provide credits back to Transmission Customers for the penalties assessed under Section 19.9. These credits will be provided in accordance with the below provisions.

The operational penalties pursuant to Section 19.9(iii) and (iv) shall be credited based on the ratio of the quarterly transmission revenues collected from each Network Transmission Customer (excluding any Transmission Provider Affiliates) or Point-To-Point Transmission Customer (excluding any Transmission Provider Affiliates) to the sum of the transmission revenues from all Transmission Customers (excluding any Transmission Provider Affiliates). The operational penalties will be refunded to the Transmission Customers based on the quarters the operational penalty applies.

The Transmission Provider will disburse accumulated operational penalty revenues, plus interest calculated in accord with 18 C.F.R. § 35.19a, within 60 days after the end of the quarter where a penalty was assessed.

20 Procedures if The Transmission Provider is Unable to Complete New Transmission Facilities for Firm Point-To-Point Transmission Service

20.1 Delays in Construction of New Facilities:

If any event occurs that will materially affect the time for completion of new facilities, or the ability to complete them, the Transmission Provider shall promptly notify the Transmission Customer. In such circumstances, the Transmission Provider shall within thirty (30) days of notifying the Transmission Customer of such delays, convene a technical meeting with the Transmission Customer to evaluate the alternatives available to the Transmission Customer. The Transmission Provider also shall make available to the Transmission Customer studies and work papers related to the delay, including all information that is in the possession of the Transmission Provider that is reasonably needed by the Transmission Customer to evaluate any alternatives.

20.2 Alternatives to the Original Facility Additions:

When the review process of Section 20.1 determines that one or more alternatives exist to the originally planned construction project, the Transmission Provider shall present such alternatives for consideration by the Transmission Customer. If, upon review of any alternatives, the Transmission Customer desires to maintain its Completed Application subject to construction of the alternative facilities, it may request the Transmission Provider to submit a revised Service Agreement for Firm Point-To-Point Transmission Service. If the alternative approach solely involves Non-Firm Point-To-Point Transmission Service, the Transmission Provider shall promptly tender a Service Agreement for Non-Firm Point-To-Point Transmission Service providing for the service. In the event the

Transmission Provider concludes that no reasonable alternative exists and the Transmission Customer disagrees, the Transmission Customer may seek relief under the dispute resolution procedures pursuant to Section 12 or it may refer the dispute to the Commission for resolution.

20.3 Refund Obligation for Unfinished Facility Additions:

If the Transmission Provider and the Transmission Customer mutually agree that no other reasonable alternatives exist and the requested service cannot be provided out of existing capability under the conditions of Part II of the Tariff, the obligation to provide the requested Firm Point-To-Point Transmission Service shall terminate and any deposit made by the Transmission Customer shall be returned with interest pursuant to Commission regulations 35.19a(a)(2)(iii). However, the Transmission Customer shall be responsible for all prudently incurred costs by the Transmission Provider through the time construction was suspended.

21 Provisions Relating to Transmission Construction and Services on the Systems of Other Utilities

21.1 Responsibility for Third-Party System Additions:

The Transmission Provider shall not be responsible for making arrangements for any necessary engineering, permitting, and construction of transmission or distribution facilities on the system(s) of any other entity or for obtaining any regulatory approval for such facilities. The Transmission Provider will undertake reasonable efforts to assist the Transmission Customer in obtaining such arrangements, including without limitation, providing any information or data required by such other electric system pursuant to Good Utility Practice.

21.2 Coordination of Third-Party System Additions:

In circumstances where the need for transmission facilities or upgrades is identified pursuant to the provisions of Part II of the Tariff, and if such upgrades further require the addition of transmission facilities on other systems, the Transmission Provider shall have the right to coordinate construction on its own system with the construction required by others. The Transmission Provider, after consultation with the Transmission Customer and representatives of such other systems, may defer construction of its new transmission facilities, if the new transmission facilities on another system cannot be completed in a timely manner. The Transmission Provider shall notify the Transmission Customer in writing of the basis for any decision to defer construction and the specific problems which must be resolved before it will initiate or resume construction of new facilities. Within sixty (60) days of receiving written notification by the Transmission Provider of its intent to defer construction pursuant to this section, the

Transmission Customer may challenge the decision in accordance with the dispute resolution procedures pursuant to Section 12 or it may refer the dispute to the Commission for resolution.

22 Changes in Service Specifications

22.1 Modifications On a Non-Firm Basis:

The Transmission Customer taking Firm Point-To-Point Transmission Service may request the Transmission Provider to provide transmission service on a non-firm basis over Receipt and Delivery Points other than those specified in the Service Agreement ("Secondary Receipt and Delivery Points"), in amounts not to exceed its firm capacity reservation, without incurring an additional Non-Firm Point-To-Point Transmission Service charge or executing a new Service Agreement, subject to the following conditions.

(a) Service provided over Secondary Receipt and Delivery Points will be non-firm only, on an as-available basis and will not displace any firm or non-firm service reserved or scheduled by third-parties under the Tariff or by the Transmission Provider on behalf of its Native Load Customers.

(b) The sum of all Firm and Non-Firm Point-To-Point Transmission Service provided to the Transmission Customer at any time pursuant to this section shall not exceed the Reserved Capacity in the relevant Service Agreement under which such services are provided.

(c) The Transmission Customer shall retain its right to schedule Firm Point-To-Point Transmission Service at the Receipt and Delivery Points specified in the relevant Service Agreement in the amount of its original capacity reservation.

(d) Service over Secondary Receipt and Delivery Points on a non-firm basis shall not require the filing of an Application for Non-Firm Point-To-Point Transmission Service under the Tariff. However, all other requirements of

Part II of the Tariff (except as to transmission rates) shall apply to transmission service on a non-firm basis over Secondary Receipt and Delivery Points.

22.2 Modification On a Firm Basis:

Any request by a Transmission Customer to modify Receipt and Delivery Points on a firm basis shall be treated as a new request for service in accordance with Section 17 hereof, except that such Transmission Customer shall not be obligated to pay any additional deposit if the capacity reservation does not exceed the amount reserved in the existing Service Agreement. While such new request is pending, the Transmission Customer shall retain its priority for service at the existing firm Receipt and Delivery Points specified in its Service Agreement.

23 Sale or Assignment of Transmission Service

23.1 Procedures for Assignment or Transfer of Service:

(a) A Transmission Custome r may sell, assign, or transfer all or a portion of its rights under its Service A greement, but only to another Eligible Customer (the Assignee). The Transmission Customer that sells, assigns or transfers its rights under its Service Agreement is hereafter referred to as the Reseller. Compensation to Resellers shall be at rates established by agreement between the Reseller and the Assignee.

(b) The Assignee must execute a service agreement with the Transmission Provider governing reassignments of transmission service prior to the date on which the reassigned service commences. The Transmission Provider shall charge the Reseller, as appropriate, at the rate stated in the Reseller's Service Agreement with the Transmission Provider or the associated OASIS schedule and credit the Reseller with the price reflected in the Assignee's Service Agreement with the Transmission Provider or the associated OASIS schedule; provided that, such credit shall be reversed in the event of non-payment by the Assignee. If the Assignee does not request any change in the Point(s) of Receipt or the Point(s) of Delivery, or a change in any other term or condition set forth in the original Service Agreement, the Assignee will receive the same services as did the Reseller and the priority of service for the Assignee will be the same as that of the Reseller. The Assignee will be subject to all terms and conditions of this Tariff. If the Assignee requests a change in service, the reservation

priority of service will be determined by the Transmission Provider pursuant to Section 13.2.

23.2 Limitations on Assignment or Transfer of Service:

If the Assignee requests a change in the Point(s) of Receipt or Point(s) of Delivery, or a change in any other specifications set forth in the original Service Agreement, the Transmission Provider will consent to such change subject to the provisions of the Tariff, provided that the change will not impair the operation and reliability of the Transmission Provider's generation, transmission, or distribution systems. The Assignee shall compensate the Transmission Provider for performing any System Impact Study needed to evaluate the capability of the Transmission System to accommodate the proposed change and any additional costs resulting from such change. The Reseller shall remain liable for the performance of all obligations under the Service Agreement, except as specifically agreed to by the Transmission Provider and the Reseller through an amendment to the Service Agreement.

23.3 Information on Assignment or Transfer of Service:

In accordance with Section 4, all sales or assignments of capacity must be conducted through or otherwise posted on the Transmission Provider's OASIS on or before the date the reassigned service commences and are subject to Section 23.1. Resellers may also use the Transmission Provider's OASIS to post transmission capacity available for resale.

24 Metering and Power Factor Correction at Receipt and Delivery Points(s)

24.1 Transmission Customer Obligations:

Unless otherwise agreed, the Transmission Customer shall be responsible for installing and maintaining compatible metering and communications equipment to accurately account for the capacity and energy being transmitted under Part II of the Tariff and to communicate the information to the Transmission Provider. Such equipment shall remain the property of the Transmission Customer.

24.2 Transmission Provider Access to Metering Data:

The Transmission Provider shall have access to metering data, which may reasonably be required to facilitate measurements and billing under the Service Agreement.

24.3 Power Factor:

Unless otherwise agreed, the Transmission Customer is required to maintain a power factor within the same range as the Transmission Provider pursuant to Good Utility Practices. The power factor requirements are specified in the Service Agreement where applicable.

25 Compensation for Transmission Service

Rates for Firm and Non-Firm Point-To-Point Transmission Service are provided in the Schedules appended to the Tariff: Firm Point-To-Point Transmission Service (Schedule 7); Non-Firm Point-To-Point Transmission Service (Schedule 8); and Distribution Substation Service in the DEF Zone (Schedule 11). The Transmission Provider shall use Part II of the Tariff to make its Third-Party Sales. The Transmission Provider shall account for such use at the applicable Tariff rates, pursuant to Section 8.

26 Stranded Cost Recovery

The Transmission Provider may seek to recover stranded costs from the Transmission Customer pursuant to this Tariff in accordance with the terms, conditions and procedures set forth in FERC Order No. 888. However, the Transmission Provider must separately file any specific proposed stranded cost charge under Section 205 of the Federal Power Act.

27 Compensation for New Facilities and Redispatch Costs

Whenever a System Impact Study performed by the Transmission Provider in connection with the provision of Firm Point-To-Point Transmission Service identifies the need for new facilities, the Transmission Customer shall be responsible for such costs to the extent consistent with Commission policy. Whenever a System Impact Study performed by the Transmission Provider identifies capacity constraints that may be relieved by redispatching the Transmission Provider's resources to eliminate such constraints, the Transmission Customer shall be responsible for the redispatch costs to the extent consistent with Commission policy.

III. NETWORK INTEGRATION TRANSMISSION SERVICE

Preamble

The Transmission Provider will provide Network Integration Transmission Service pursuant to the applicable terms and conditions contained in the Tariff and Service Agreement. Network Integration Transmission Service allows the Network Customer to integrate, economically dispatch and regulate its current and planned Network Resources to serve its Network Load in a manner comparable to that in which the Transmission Provider utilizes its Transmission System to serve its Native Load Customers. Network Integration Transmission Service also may be used by the Network Customer to deliver economy energy purchases to its Network Load from non-designated resources on an as-available basis without additional charge. Transmission Service for sales to non-designated loads will be provided pursuant to the applicable terms and conditions of Part II of the Tariff.

28 Nature of Network Integration Transmission Service

28.1 Scope of Service:

Network Integration Transmission Service is a transmission service that allows Network Customers to efficiently and economically utilize their Network Resources (as well as other non-designated generation resources) to serve their Network Load located in the Transmission Provider's Control Area and any additional load that may be designated pursuant to Section 31.3 of the Tariff. The Network Customer taking Network Integration Transmission Service must obtain or provide Ancillary Services pursuant to Section 3.

28.2 Transmission Provider Responsibilities:

The Transmission Provider will plan, construct, operate and maintain its Transmission System in accordance with Good Utility Practice and its planning obligations in Attachment N-1 or Attachment N-2, as applicable, in order to provide the Network Customer with Network Integration Transmission Service over the Transmission Provider's Transmission System. The Transmission Provider, on behalf of its Native Load Customers, shall be required to designate resources and loads in the same manner as any Network Customer under Part III of this Tariff. This information must be consistent with the information used by the Transmission Provider to calculate available transfer capability. The Transmission Provider shall include the Network Customer's Network Load in its Transmission System planning and shall, consistent with Good Utility Practice and Attachment N-1 or Attachment N-2, as applicable, endeavor to construct and place into service sufficient transfer capability to deliver the Network Customer's Network Resources to serve its Network Load on a basis comparable to the Transmission Provider's delivery of its own generating and purchased resources to its Native Load Customers.

28.3 Network Integration Transmission Service:

The Transmission Provider will provide firm transmission service over its Transmission System to the Network Customer for the delivery of capacity and energy from its designated Network Resources to service its Network Loads on a basis that is comparable to the Transmission Provider's use of the Transmission System to reliably serve its Native Load Customers.

28.4 Secondary Service:

The Network Customer may use the Transmission Provider's Transmission System to deliver energy to its Network Loads from resources that have not been designated as Network Resources. Such energy shall be transmitted, on an as- available basis, at no additional charge. Secondary service shall not require the filing of an Application for Network Integration Transmission Service under the Tariff. However, all other requirements of Part III of the Tariff (except for transmission rates) shall apply to secondary service. Deliveries from resources other than Network Resources will have a higher priority than any Non-Firm Point-To-Point Transmission Service under Part II of the Tariff. Because the Transmission Provider's business practices establish an earliest time by which requests for secondary service may be submitted, any requests for such service submitted within five minutes after that time shall be deemed to have been submitted simultaneously. If insufficient transfer capability is available to accommodate all such requests, after assigning priority to requests submitted within the simultaneous window based upon price, duration, and pre-confirmed status, the available transfer capability will be allocated to simultaneous, yet otherwise equivalent requests on the basis of a random lottery procedure, as described further in Transmission Provider's business practices.

28.5 Real Power Losses:

Real Power Losses are associated with all transmission service. The Transmission Provider is not obligated to provide Real Power Losses. The Network Customer is responsible for replacing losses associated with all

transmission service as calculated by the Transmission Provider.

For services provided on and after June 1, 2019, effective as of June 1, 2019 and thereafter on an annual basis the applicable Real Power Loss factor in the DEP Zone shall be calculated in accordance with the methodology for doing so set forth in Attachment W and in accordance with Section 1.l of Attachment H.2, DEP Formula Rate Implementation Protocols.

The applicable Real Power Loss factors in the DEF Zone are 1.18% for delivery at transmission voltages and 2.18% for delivery at distribution voltages. Procedures for annual changes to the Real Power Loss factors in the DEF Zone are set out in Attachment Q.

For services provided on and after June 1, 2019, effective as of June 1, 2019 and thereafter on an annual basis, the applicable Real Power Loss factor in the DEC Zone used to determine the amount of losses associated with the use of facilities at or above 44 kV shall be calculated in accordance with the methodology for doing so set forth in Attachment W and in accordance with Section 2(j) of Exhibit A to Schedule 10-B, Formula Rate Implementation Protocols. In the DEC and DEP Zones, the Transmission Provider and Transmission Customer may agree to have the Transmission Provider supply the capacity and/or energy necessary to compensate for losses in accordance with Schedule 9.

28.6 Restrictions on Use of Service:

The Network Customer shall not use Network Integration Transmission Service for (i) sales of capacity and energy to non-designated loads, or (ii) direct or indirect provision of transmission service by the Network Customer to third parties. All Network Customers taking Network Integration Transmission Service

shall use Point-To-Point Transmission Service under Part II of the Tariff for any Third-Party Sale which requires use of the Transmission Provider's Transmission System. The Transmission Provider shall specify any appropriate charges and penalties and all related terms and conditions applicable in the event that a Network Customer uses Network Integration Transmission Service or secondary service pursuant to Section 28.4 to facilitate a wholesale sale that does not serve a Network Load. Such use will be treated as an unreserved use of Point-To-Point Transmission Service and will be subject to the unreserved use penalties for such service set forth in Section 13.7.

29 Initiating Service

29.1 Condition Precedent for Receiving Service:

Subject to the terms and conditions of Part III of the Tariff, the Transmission Provider will provide Network Integration Transmission Service to any Eligible Customer, provided that (i) the Eligible Customer completes an Application for service as provided under Part III of the Tariff, (ii) the Eligible Customer and the Transmission Provider complete the technical arrangements set forth in Sections 29.3 and 29.4, (iii) the Eligible Customer executes a Service Agreement pursuant to Attachment F-1 or Attachment F-2, as applicable, for service under Part III of the Tariff or requests in writing that the Transmission Provider file a proposed unexecuted Service Agreement with the Commission, (iv) the Eligible Customer meets the Creditworthiness criteria set forth in Attachment O, and (v) the Eligible Customer executes a Network Operating Agreement with the Transmission Provider pursuant to Attachment G (in the DEC Zone, the Network Operating Agreement is Attachment E to the Form of Service Agreement for Network Integration Transmission Service (available at Attachment F-2 to the Tariff)), or requests in writing that Transmission Provider file a proposed unexecuted Network Operating Agreement.

29.2 Application Procedures:

An Eligible Customer requesting service under Part III of the Tariff must submit an Application, with a deposit approximating the charge for one month of service, to the Transmission Provider as far as possible in advance of the month in which service is to commence; provided that the Transmission Provider shall on a non-discriminatory basis waive the requirement that a deposit accompany an

Application for an Eligible Customer that has met the necessary conditions of Attachment O of this Tariff. Unless subject to the procedures in Section 2, Completed Applications for Network Integration Transmission Service will be assigned a priority according to the date and time the Application is received, with the earliest Application receiving the highest priority. Applications should be submitted by entering the information listed below on the Transmission Provider's OASIS. A Completed Application shall provide all of the information included in 18 C.F.R. § 2.20 including but not limited to the following:

(i) The identity, address, telephone number and facsimile number of the party requesting service;

(ii) A statement that the party requesting service is, or will be upon commencement of service, an Eligible Customer under the Tariff;

(iii) A description of the Network Load at each delivery point. This description should separately identify and provide the Eligible Customer's best estimate of the total loads to be served at each transmission voltage level, and the loads to be served from each Transmission Provider substation at the same transmission voltage level. The description should include a ten (10) year forecast of summer and winter load and resource requirements beginning with the first year after the service is scheduled to commence;

(iv) The amount and location of any interruptible loads included in the Network Load. This shall include the summer and winter capacity requirements for each interruptible load (had such load not been interruptible), that portion of the load subject to interruption, the conditions under which an interruption can be implemented and any limitations on the amount and frequency of interruptions. An Eligible Customer should identify the amount of interruptible customer load (if any) included in the 10 year load forecast provided in response to (iii) above;

(v) A description of Network Resources (current and 10-year projection). For each on-system Network Resource, such description shall include:

- Unit size and amount of capacity from that unit to be designated as Network Resource

- VAR capability (both leading and lagging) of all generators
- Operating restrictions
    - Any periods of restricted operations throughout the year
    - Maintenance schedules
    - Minimum loading level of unit
    - Normal operating level of unit
    - Any must-run unit designations required for system reliability or contract reasons
- Approximate variable generating cost ($/MWH) for redispatch computations
- Arrangements governing sale and delivery of power to third parties from generating facilities located in the Transmission Provider Control Area, where only a portion of unit output is designated as a Network Resource;

For each off-system Network Resource, such description shall include:

- Identification of the Network Resource as an off-system resource
- Amount of power to which the customer has rights
- Identification of the control area from which the power will originate
- Delivery point(s) to the Transmission Provider's Transmission System
- Transmission arrangements on the external transmission system(s)
- Operating restrictions, if any
    - Any periods of restricted operations throughout the year
    - Maintenance schedules
    - Minimum loading level of unit
    - Normal operating level of unit
    - Any must-run unit designations required for system reliability or contract reasons
- Approximate variable generating cost ($/MWH) for redispatch computations;

(vi) Description of Eligible Customer's transmission system:

- Load flow and stability data, such as real and reactive parts of the load, lines, transformers, reactive devices and load type, including normal and emergency ratings of all transmission equipment in a load flow format compatible with that used by the Transmission Provider
- Operating restrictions needed for reliability
- Operating guides employed by system operators
- Contractual restrictions or committed uses of the Eligible Customer's transmission system, other than the Eligible Customer's Network Loads and Resources
- Location of Network Resources described in subsection (v) above

- 10 year projection of system expansions or upgrades
- Transmission System maps that include any proposed expansions or upgrades
- Thermal ratings of Eligible Customer's Control Area ties with other Control Areas;

(vii) Service Commencement Date and the term of the requested Network Integration Transmission Service. The minimum term for Network Integration Transmission Service is one year;

(viii) A statement signed by an authorized officer from or agent of the Network Customer attesting that all of the network resources listed pursuant to Section 29.2(v) satisfy the following conditions: (1) the Network Customer owns the resource, has committed to purchase generation pursuant to an executed contract, or has committed to purchase generation where execution of a contract is contingent upon the availability of transmission service under Part III of the Tariff; and (2) the Network Resources do not include any resources, or any portion thereof, that are committed for sale to non-designated third party load or otherwise cannot be called upon to meet the Network Customer's Network Load on a non-interruptible basis, except for purposes of fulfilling obligations under a reserve sharing program; and

(ix) Any additional information required of the Transmission Customer as specified in the Transmission Provider's planning process established in Attachment N-1 or Attachment N-2, as applicable.

Unless the Parties agree to a different time frame, the Transmission Provider must acknowledge the request within ten (10) days of receipt. The acknowledgment must include a date by which a response, including a Service Agreement, will be sent to the Eligible Customer. If an Application fails to meet the requirements of this section, the Transmission Provider shall notify the Eligible Customer requesting service within fifteen (15) days of receipt and specify the reasons for such failure. Wherever possible, the Transmission Provider will attempt to remedy deficiencies in the Application through informal communications with the Eligible Customer. If such efforts are unsuccessful, the Transmission Provider shall return the Application without prejudice to the Eligible Customer filing a

new or revised Application that fully complies with the requirements of this section. The Eligible Customer will be assigned a new priority consistent with the date of the new or revised Application. The Transmission Provider shall treat this information consistent with the standards of conduct contained in Part 37 of the Commission's regulations.

29.3 Technical Arrangements to be Completed Prior to Commencement of Service:

Network Integration Transmission Service shall not commence until the Transmission Provider and the Network Customer, or a third party, have completed installation of all equipment specified under the Network Operating Agreement consistent with Good Utility Practice and any additional requirements reasonably and consistently imposed to ensure the reliable operation of the Transmission System. The Transmission Provider shall exercise reasonable efforts, in coordination with the Network Customer, to complete such arrangements as soon as practicable taking into consideration the Service Commencement Date.

29.4 Network Customer Facilities:

The provision of Network Integration Transmission Service shall be conditioned upon the Network Customer's constructing, maintaining and operating the facilities on its side of each delivery point or interconnection necessary to reliably deliver capacity and energy from the Transmission Provider's Transmission System to the Network Customer. The Network Customer shall be solely responsible for constructing or installing all facilities on the Network Customer's side of each such delivery point or interconnection.

29.5 Filing of Service Agreement:

The Transmission Provider will file Service Agreements with the Commission in compliance with applicable Commission regulations.

30 Network Resources

30.1 Designation of Network Resources:

Network Resources shall include all generation owned, purchased or leased by the Network Customer designated to serve Network Load under the Tariff. Network Resources may not include resources, or any portion thereof, that are committed for sale to non-designated third party load or otherwise cannot be called upon to meet the Network Customer's Network Load on a non-interruptible basis, except for purposes of fulfilling obligations under a reserve sharing program. Any owned or purchased resources that were serving the Network Customer's loads under firm agreements entered into on or before the Service Commencement Date shall initially be designated as Network Resources until the Network Customer terminates the designation of such resources.

30.2 Designation of New Network Resources:

The Network Customer may designate a new Network Resource by providing the Transmission Provider with as much advance notice as practicable. A designation of a new Network Resource must be made through the Transmission Provider's OASIS by a request for modification of service pursuant to an Application under Section 29. This request must include a statement that the new network resource satisfies the following conditions: (1) the Network Customer owns the resource, has committed to purchase generation pursuant to an executed contract, or has committed to purchase generation where execution of a contract is contingent upon the availability of transmission service under Part III of the Tariff; and (2) The Network Resources do not include any resources, or any portion thereof, that are committed for sale to non-designated third party load or otherwise cannot be

called upon to meet the Network Customer's Network Load on a non-interruptible basis, except for purposes of fulfilling obligations under a reserve sharing program. The Network Customer's request will be deemed deficient if it does not include this statement and the Transmission Provider will follow the procedures for a deficient application as described in Section 29.2 of the Tariff. One day is the minimum term for a Network Resource designation.

Because the Transmission Provider's business practices establish an earliest time by which Long-Term Firm Requests may be submitted (transmission reservation period), any requests for Applications to designate Network Resources made within the first five minutes after the transmission reservation period opens for the service will be considered to have been submitted simultaneously. If the transmission reservation period for Network Resource designations is the same as the transmission reservation period for Long-Term Firm Requests, such Network Resource designations requests made within the first five minutes after the transmission reservation period opens also will be considered to have been submitted simultaneously with the Long-Term Firm Requests. If sufficient transfer capability is not available to meet all Long-Term Firm Requests and Network Resource designation requests that are considered to have been submitted simultaneously, available transfer capability first will be allocated based on pre-confirmation status (Pre-Confirmed or not confirmed). If insufficient transfer capability is available to accommodate all Pre-Confirmed Applications, then Pre-Confirmed Applications will be allocated available transfer

capability on the basis of a random lottery procedure, as described further in Transmission Provider's business practices.

If sufficient transfer capability is available to accommodate all Pre-Confirmed Applications but not enough to accommodate all other requests, then the Pre-Confirmed Applications will be accepted and the remaining available transfer capability will be allocated to the other requests on the basis of a random lottery procedure, as described further in Transmission Provider's business practices.

30.3 Termination of Network Resources:

The Network Customer may terminate the designation of all or part of a generating resource as a Network Resource by providing notification to the Transmission Provider through OASIS no later than 10:00 a.m. of the day prior to the commencement of the termination. Requests to terminate Network Resources submitted after 10:00 a.m. of the day prior to the commencement of the termination will be accommodated, if practicable. Any request for termination of Network Resource status must be submitted on OASIS, and should indicate whether the request is for indefinite or temporary termination. A request for indefinite termination of Network Resource status must indicate the date and time that the termination is to be effective, and the identification and capacity of the resource(s) or portions thereof to be indefinitely terminated. If the indefinite termination of the Network Resource is associated with an approved Generating Facility Replacement processed under Section 4.9 of Attachment K (LGIP), and the termination request identifies the related new Network Resource request associated with the Replacement Generating Facility, the related service

requests must be approved as a single request and the Designated Network Resource status of the Existing Generating Facility shall be transferred to the Replacement Generating Facility.

A request for temporary termination of Network Resource status must include the following:

(i) Effective date and time of temporary termination;

(ii) Effective date and time of redesignation, following period of temporary termination;

(iii) Identification and capacity of resource(s) or portions thereof to be temporarily terminated;

(iv) Resource description and attestation for redesignating the network resource following the temporary termination, in accordance with Section 30.2; and

(v) Identification of any related transmission service requests to be evaluated concomitantly with the request for temporary termination, such that the requests for undesignation and the request for these related transmission service requests must be approved or denied as a single request. The evaluation of these related transmission service requests must take into account the termination of the network resources identified in (iii) above, as well as all competing transmission service requests of higher priority.

As part of a temporary termination, a Network Customer may only redesignate the same resource that was originally designated, or a portion thereof. Requests to redesignate a different resource and/or a resource with increased capacity will

be deemed deficient and the Transmission Provider will follow the procedures for a deficient application as described in Section 29.2 of the Tariff.

30.4 Operation of Network Resources:

The Network Customer shall not operate its designated Network Resources located in the Network Customer's or Transmission Provider's Control Area such that the output of those facilities exceeds its designated Network Load, plus Non-Firm Sales delivered pursuant to Part II of the Tariff, plus losses, plus power sales under a reserve sharing program, plus sales that permit curtailment without penalty to serve its designated Network Load. This limitation shall not apply to changes in the operation of a Transmission Customer's Network Resources at the request of the Transmission Provider to respond to an emergency or other unforeseen condition which may impair or degrade the reliability of the Transmission System. For all Network Resources not physically connected with the Transmission Provider's Transmission System, the Network Customer may not schedule delivery of energy in excess of the Network Resource's capacity, as specified in the Network Customer's Application pursuant to Section 29, unless the Network Customer supports such delivery within the Transmission Provider's Transmission System by either obtaining Point-To-Point Transmission Service or utilizing secondary service pursuant to Section 28.4. The Transmission Provider shall specify the rate treatment and all related terms and conditions applicable in the event that a Network Customer's schedule at the delivery point for a Network Resource not physically interconnected with the Transmission Provider's Transmission System exceeds the Network Resource's designated capacity, excluding energy delivered using secondary service or Point-To-Point

Transmission Service. In the DEC Zone, such delivery will be treated as an unreserved use of Point-To-Point Transmission Service and subject to the unreserved use penalties for such service set forth in Section 13.7.

30.5 Network Customer Redispatch Obligation:

As a condition to receiving Network Integration Transmission Service, the Network Customer agrees to redispatch its Network Resources as requested by the Transmission Provider pursuant to Section 33.2. To the extent practical, the redispatch of resources pursuant to this section shall be on a least cost, non-discriminatory basis between all Network Customers and the Transmission Provider.

30.6 Transmission Arrangements for Network Resources Not Physically Interconnected With The Transmission Provider:

The Network Customer shall be responsible for any arrangements necessary to deliver capacity and energy from a Network Resource not physically interconnected with the Transmission Provider's Transmission System. The Transmission Provider will undertake reasonable efforts to assist the Network Customer in obtaining such arrangements, including without limitation, providing any information or data required by such other entity pursuant to Good Utility Practice.

30.7 Limitation in Designation of Network Resources:

The Network Customer must demonstrate that it owns or has committed to purchase generation pursuant to an executed contract in order to designate a generating resource as a Network Resource. Alternatively, the Network Customer

may establish that execution of a contract is contingent upon the availability of transmission service under Part III of the Tariff.

30.8 Use of Interface Capacity by the Network Customer:

There is no limitation upon a Network Customer's use of the Transmission Provider's Transmission System at any particular interface to integrate the Network Customer's Network Resources (or substitute economy purchases) with its Network Loads. However, a Network Customer's use of the Transmission Provider's total interface capacity with other transmission systems may not exceed the Network Customer's Load.

30.9 Network Customer Owned Transmission Facilities:

The Network Customer that owns existing transmission facilities that are integrated with the Transmission Provider's Transmission System may be eligible to receive consideration either through a billing credit or some other mechanism. In order to receive such consideration the Network Customer must demonstrate that its transmission facilities are integrated into the plans or operations of the Transmission Provider to serve its power and transmission customers. For facilities added by the Network Customer subsequent to July 13, 2007, the Network Customer shall receive credit for such transmission facilities added if such facilities are integrated into the operations of the Transmission Provider's facilities; provided however, the Network Customer's transmission facilities shall be presumed to be integrated if such transmission facilities, if owned by the Transmission Provider, would be eligible for inclusion in the Transmission Provider's annual transmission revenue requirement as specified in Attachment H. Calculation of any credit under this subsection shall be addressed in either the

Network Customer's Service Agreement or any other agreement between the Parties.

31 Designation of Network Load

31.1 Network Load:

The Network Customer must designate the individual Network Loads on whose behalf the Transmission Provider will provide Network Integration Transmission Service. The Network Loads shall be specified in the Service Agreement.

31.2 New Network Loads Connected With the Transmission Provider:

The Network Customer shall provide the Transmission Provider with as much advance notice as reasonably practicable of the designation of new Network Load that will be added to its Transmission System. A designation of new Network Load must be made through a modification of service pursuant to a new Application. The Transmission Provider will use due diligence to install any transmission facilities required to interconnect a new Network Load designated by the Network Customer. The costs of new facilities required to interconnect a new Network Load shall be determined in accordance with the procedures provided in Section 32.4 and shall be charged to the Network Customer in accordance with Commission policies.

31.3 Network Load Not Physically Interconnected With the Transmission Provider:

This section applies to both initial designation pursuant to Section 31.1 and the subsequent addition of new Network Load not physically interconnected with the Transmission Provider. To the extent that the Network Customer desires to obtain transmission service for a load outside the Transmission Provider's Transmission System, the Network Customer shall have the option of (1) electing to include the entire load as Network Load for all purposes under Part III of the

Tariff and designating Network Resources in connection with such additional Network Load, or (2) excluding that entire load from its Network Load and purchasing Point-To-Point Transmission Service under Part II of the Tariff. To the extent that the Network Customer gives notice of its intent to add a new Network Load as part of its Network Load pursuant to this section the request must be made through a modification of service pursuant to a new Application.

31.4 New Interconnection Points:

To the extent the Network Customer desires to add a new Delivery Point or interconnection point between the Transmission Provider's Transmission System and a Network Load, the Network Customer shall provide the Transmission Provider with as much advance notice as reasonably practicable.

31.5 Changes in Service Requests:

Under no circumstances shall the Network Customer's decision to cancel or delay a requested change in Network Integration Transmission Service (e.g., the addition of a new Network Resource or designation of a new Network Load) in any way relieve the Network Customer of its obligation to pay the costs of transmission facilities constructed by the Transmission Provider and charged to the Network Customer as reflected in the Service Agreement. However, the Transmission Provider must treat any requested change in Network Integration Transmission Service in a non-discriminatory manner.

31.6 Annual Load and Resource Information Updates:

The Network Customer shall provide the Transmission Provider with annual updates of Network Load and Network Resource forecasts consistent with those included in its Application for Network Integration Transmission Service under

Part III of the Tariff including but not limited to, any information provided under section 29.2(ix) pursuant to the Transmission Provider's planning process in Attachment N-1 or Attachment N-2, as applicable. The Network Customer also shall provide the Transmission Provider with timely written notice of material changes in any other information provided in its Application relating to the Network Customer's Network Load, Network Resources, its transmission system or other aspects of its facilities or operations affecting the Transmission Provider's ability to provide reliable service.

32 Additional Study Procedures For Network Integration Transmission Service Requests

32.1 Notice of Need for System Impact Study:

After receiving a request for service, the Transmission Provider shall determine on a non-discriminatory basis whether a System Impact Study is needed. A description of the Transmission Provider's methodology for completing a System Impact Study is provided in Attachment D. If the Transmission Provider determines that a System Impact Study is necessary to accommodate the requested service, it shall so inform the Eligible Customer, as soon as practicable. In such cases, the Transmission Provider shall within thirty (30) days of receipt of a Completed Application, tender a System Impact Study Agreement pursuant to which the Eligible Customer shall agree to reimburse the Transmission Provider for performing the required System Impact Study. For a service request to remain a Completed Application, the Eligible Customer shall execute the System Impact Study Agreement and return it to the Transmission Provider within fifteen (15) days. If the Eligible Customer elects not to execute the System Impact Study Agreement, its Application shall be deemed withdrawn and its deposit shall be returned with interest.

32.2 System Impact Study Agreement and Cost Reimbursement:

(i) The System Impact Study Agreement will clearly specify the Transmission Provider's estimate of the actual cost, and time for completion of the System Impact Study. The charge shall not exceed the actual cost of the study. In performing the System Impact Study, the Transmission Provider shall rely, to the extent reasonably practicable, on existing transmission planning studies. The Eligible Customer will not be assessed a charge for such existing studies; however, the Eligible Customer will be responsible for charges associated with any modifications to existing planning studies that are reasonably necessary to evaluate the impact of the Eligible Customer's request for service on the Transmission System.

(ii) If in response to multiple Eligible Customers requesting service in relation to the same competitive solicitation, a single System Impact Study is sufficient for the Transmission Provider to accommodate the service requests, the costs of that study shall be pro-rated among the Eligible Customers.

(iii) For System Impact Studies that the Transmission Provider conducts on its own behalf, the Transmission Provider shall record the cost of the System Impact Studies pursuant to Section 8.

32.3 System Impact Study Procedures:

Upon receipt of an executed System Impact Study Agreement, the Transmission Provider will use due diligence to complete the required System Impact Study within a sixty (60) day period. The System Impact Study shall identify (1) any

system constraints, identified with specificity by transmission element or flowgate, (2) redispatch options (when requested by an Eligible Customer) including, to the extent possible, an estimate of the cost of redispatch, (3) available options for installation of automatic devices to curtail service (when requested by an Eligible Customer), and (4) additional Direct Assignment Facilities or Network Upgrades required to provide the requested service. For customers requesting the study of redispatch options, the System Impact Study shall (1) identify all resources located within the Transmission Provider's Control Area that can significantly contribute toward relieving the system constraint and (2) provide a measurement of each resource's impact on the system constraint. If the Transmission Provider possesses information indicating that any resource outside its Control Area could relieve the constraint, it shall identify each such resource in the System Impact Study. In the event that the Transmission Provider is unable to complete the required System Impact Study within such time period, it shall so notify the Eligible Customer and provide an estimated completion date along with an explanation of the reasons why additional time is required to complete the required studies. A copy of the completed System Impact Study and related work papers shall be made available to the Eligible Customer as soon as the System Impact Study is complete. The Transmission Provider will use the same due diligence in completing the System Impact Study for an Eligible Customer as it uses when completing studies for itself. The Transmission Provider shall notify the Eligible Customer immediately upon completion of the System Impact Study if the Transmission System will be adequate to

accommodate all or part of a request for service or that no costs are likely to be incurred for new transmission facilities or upgrades. In order for a request to remain a Completed Application, within fifteen (15) days of completion of the System Impact Study the Eligible Customer must execute a Service Agreement or request the filing of an unexecuted Service Agreement, or the Application shall be deemed terminated and withdrawn.

32.4 Facilities Study Procedures:

If a System Impact Study indicates that additions or upgrades to the Transmission System are needed to supply the Eligible Customer's service request, the Transmission Provider, within thirty (30) days of the completion of the System Impact Study, shall tender to the Eligible Customer a Facilities Study Agreement pursuant to which the Eligible Customer shall agree to reimburse the Transmission Provider for performing the required Facilities Study. For a service request to remain a Completed Application, the Eligible Customer shall execute the Facilities Study Agreement and return it to the Transmission Provider within fifteen (15) days. If the Eligible Customer elects not to execute the Facilities Study Agreement, its Application shall be deemed withdrawn and its deposit shall be returned with interest. Upon receipt of an executed Facilities Study Agreement, the Transmission Provider will use due diligence to complete the required Facilities Study within a sixty (60) day period. If the Transmission Provider is unable to complete the Facilities Study in the allotted time period, the Transmission Provider shall notify the Eligible Customer and provide an estimate of the time needed to reach a final determination along with an explanation of the reasons that additional time is required to complete the study. When completed,

the Facilities Study will include a good faith estimate of (i) the cost of Direct Assignment Facilities to be charged to the Eligible Customer, (ii) the Eligible Customer's appropriate share of the cost of any required Network Upgrades, and (iii) the time required to complete such construction and initiate the requested service. The Eligible Customer shall provide the Transmission Provider with a letter of credit or other reasonable form of security acceptable to the Transmission Provider equivalent to the costs of new facilities or upgrades consistent with commercial practices as established by the Uniform Commercial Code. The Eligible Customer shall have thirty (30) days to execute a Service Agreement or request the filing of an unexecuted Service Agreement and provide the required letter of credit or other form of security or the request no longer will be a Completed Application and shall be deemed terminated and withdrawn.

32.5 Penalties for Failure to Meet Study Deadlines:

Section 19.9 defines penalties that apply for failure to meet the 60-day study completion due diligence deadlines for System Impact Studies and Facilities Studies under Part II of the Tariff. These same requirements and penalties apply to service under Part III of the Tariff.

33 Load Shedding and Curtailments

33.1 Procedures:

Prior to the Service Commencement Date, the Transmission Provider and the Network Customer shall establish Load Shedding and Curtailment procedures pursuant to the Network Operating Agreement with the objective of responding to contingencies on the Transmission System and on systems directly and indirectly interconnected with the Transmission Provider's Transmission System. The Parties will implement such programs during any period when the Transmission Provider determines that a system contingency exists and such procedures are necessary to alleviate such contingency. The Transmission Provider will notify all affected Network Customers in a timely manner of any scheduled Curtailment.

33.2 Transmission Constraints:

During any period when the Transmission Provider determines that a transmission constraint exists on the Transmission System, and such constraint may impair the reliability of the Transmission Provider's system, the Transmission Provider will take whatever actions, consistent with Good Utility Practice, that are reasonably necessary to maintain the reliability of the Transmission Provider's system. To the extent the Transmission Provider determines that the reliability of the Transmission System can be maintained by redispatching resources, the Transmission Provider will initiate procedures pursuant to the Network Operating Agreement to redispatch all Network Resources of Network Customers and the Transmission Provider's own resources on a least-cost basis without regard to the ownership of such resources. Any redispatch under this section may not unduly discriminate between the Transmission Provider's use of the Transmission System

on behalf of its Native Load Customers, any Network Customer's use of the Transmission System to serve its designated Network Load.

33.3 Cost Responsibility for Relieving Transmission Constraints:

Whenever the Transmission Provider implements least-cost redispatch procedures in response to a transmission constraint, the Transmission Provider and Network Customers will each bear a proportionate share of the total redispatch cost based on their respective Load Ratio Shares, as appropriate.

33.4 Curtailments of Scheduled Deliveries:

If a transmission constraint on the Transmission Provider's Transmission System cannot be relieved through the implementation of least-cost redispatch procedures and the Transmission Provider determines that it is necessary to Curtail scheduled deliveries, the Parties shall Curtail such schedules in accordance with the Network Operating Agreement or pursuant to the Transmission Loading Relief procedures specified in Attachment L.

33.5 Allocation of Curtailments:

The Transmission Provider shall, on a non-discriminatory basis, Curtail the transaction(s) that effectively relieve the constraint. However, to the extent practicable and consistent with Good Utility Practice, any Curtailment will be shared by the Transmission Provider and Network Customer in proportion to their respective Load Ratio Shares. The Transmission Provider shall not direct the Network Customer to Curtail schedules to an extent greater than the Transmission Provider would Curtail the Transmission Provider's schedules under similar circumstances.

33.6 Load Shedding:

To the extent that a system contingency exists on the Transmission Provider's Transmission System and the Transmission Provider determines that it is necessary for the Transmission Provider and Network Customers to shed load, the Parties shall shed load in accordance with previously established procedures under the Network Operating Agreement.

33.7 System Reliability:

Notwithstanding any other provisions of this Tariff, the Transmission Provider reserves the right, consistent with Good Utility Practice and on a not unduly discriminatory basis, to Curtail Network Integration Transmission Service without liability on the Transmission Provider's part for the purpose of making necessary adjustments to, changes in, or repairs on its lines, substations and facilities, and in cases where the continuance of Network Integration Transmission Service would endanger persons or property. In the event of any adverse condition(s) or disturbance(s) on the Transmission Provider's Transmission System or on any other system(s) directly or indirectly interconnected with the Transmission Provider's Transmission System, the Transmission Provider, consistent with Good Utility Practice, also may Curtail Network Integration Transmission Service in order to (i) limit the extent or damage of the adverse condition(s) or disturbance(s), (ii) prevent damage to generating or transmission facilities, or (iii) expedite restoration of service. The Transmission Provider will give the Network Customer as much advance notice as is practicable in the event of such Curtailment. Any Curtailment of Network Integration Transmission Service will

be not unduly discriminatory relative to the Transmission Provider's use of the Transmission System on behalf of its Native Load Customers.

In the DEP Zone, the DEC Zone, and in the DEF Zone, in the event that the Network Customer fails to respond to established Load Shedding and Curtailment procedures, the Customer shall pay, in addition to any other charges for service, a charge equal to two times the amount of transmission service which the Customer fails to curtail multiplied by the monthly charge for Network Integration Transmission Service.

34 Rates and Charges

The Network Customer shall pay the Transmission Provider for any Direct Assignment Facilities, Ancillary Services, and applicable study costs, consistent with Commission policy, along with the following:

34.1 Monthly Demand Charge:

The Network Customer whose Network Load is located in or served from the DEP Zone shall pay a monthly Demand Charge which shall be determined by multiplying its load at the time of the monthly transmission peak times the Transmission Provider's monthly transmission rate for the DEP and Zone as specified in Attachment H.

The Network Customer whose Network Load is located in or served from the DEF Zone shall pay a monthly Demand Charge, which shall be determined as provided in Schedules 10-A and 11.

The Network Customer whose Network Load is located in or served from the DEC Zone by facilities at or above 44 kV shall pay a monthly Demand Charge, which shall be determined by multiplying its Load Ratio Share times one twelfth (1/12) of the Transmission Provider's Annual Transmission Revenue Requirement determined pursuant to Schedule 10-B, Exhibit B.

A Network Customer utilizing Network Integration Transmission Service under this Tariff, or Long-Term Firm or Short-Term Firm Point-To-Point Transmission Service in any Zone to serve Network Load located in another Zone, shall pay only the applicable charge of the Zone in which the Network Load is located.

34.2 Determination of Network Customer's Monthly Network Load:

In the DEP Zone and in the DEF Zone, the Network Customer's monthly Network Load in a Zone is its hourly load (including its designated Network Load not physically interconnected with the Transmission Provider under Section 31.3) that is located in or connected to that Zone coincident with the Transmission Provider's Monthly Transmission System Peak in that Zone.

In the DEC Zone, the Network Customer's monthly Network Load is its hourly load (including its designated Network Load not physically interconnected with the Transmission Provider under Section 31.3) that is located in or connected to the DEC Zone coincident with the Transmission Provider's Monthly Transmission System Peak, plus the output of the Network Customer's behind the load-meter generation at the time of the Transmission Provider's Monthly Transmission Peak.

34.3 Determination of Transmission Provider's Monthly Transmission System Peak:

The Transmission Provider's monthly Transmission System load in the DEP Zone and in the DEF Zone is the Transmission Provider's Monthly Transmission System Peak in that Zone minus the coincident peak usage of all Firm Point-To-Point Transmission Service Customers in that Zone pursuant to Part II of this Tariff plus the Reserved Capacity of all Firm Point-To-Point Transmission Service Customers taking service in that Zone.

The Transmission Provider's Monthly Transmission System Peak in the DEC Zone is the highest hourly total (single hour coincident amount of the following: (a) the Transmission Provider's Net Energy for Load, plus (b) the

output of all behind-the-load-meter generation of Network Customers, plus (c) the amount of firm loads that have been pseudo-tied out of the Transmission Provider's Control Area, minus (d) the usage of all Point-To-Point Transmission Service customers pursuant to Part II of this Tariff that has not already been accounted for in the Net Energy for Load calculation, plus (e) the Reserved Capacity of all Long-Term Firm Point-To-Point Transmission Service customers.

34.4 Redispatch Charge:

The Network Customer shall pay a proportionate share of any redispatch costs for the Zone in which it is taking service, allocated among Network Customers and the Transmission Provider pursuant to Section 33. To the extent that the Transmission Provider incurs an obligation to the Network Customer for redispatch costs in accordance with Section 33, such amounts shall be credited against the Network Customer's bill for the applicable month.

34.5 Stranded Cost Recovery:

The Transmission Provider may seek to recover stranded costs from the Network Customer pursuant to this Tariff in accordance with the terms, conditions and procedures set forth in FERC Order No. 888. However, the Transmission Provider must separately file any proposal to recover stranded costs under Section 205 of the Federal Power Act.

IV. RESERVED

36 Reserved

37 Reserved

38 Reserved

39 Reserved

40 Reserved

41 Reserved

42 Reserved

43 Reserved

44 Reserved

45 Reserved

46 Reserved

SCHEDULE 1

SCHEDULING, SYSTEM CONTROL AND DISPATCH SERVICE

This service is required to schedule the movement of power through, out of, within, or into a Control Area. This service can be provided only by the operator of the Control Area in which the transmission facilities used for transmission service are located. Scheduling, System Control and Dispatch Service is to be provided directly by the Transmission Provider (if the Transmission Provider is the Control Area operator) or indirectly by the Transmission Provider making arrangements with the Control Area operator that performs this service for the Transmission Provider's Transmission System. The Transmission Customer must purchase this service from the Transmission Provider or the Control Area operator. The charges for Scheduling, System Control and Dispatch Service are to be based on the rates set forth below. To the extent the Control Area operator performs this service for the Transmission Provider, charges to the Transmission Customer are to reflect only a pass-through of the costs charged to the Transmission Provider by that Control Area operator.

Charges:

The charge for Scheduling, System Control and Dispatch Service shall be based on the Zone in which the load is located or, if the energy is transmitted to an interface with another transmission provider, the last Zone in which transmission service is reserved by the Transmission Customer, except in the case of energy being transmitted to serve Network Load under Part III of this Tariff in which case the applicable charge will be under Section 34 of the Tariff.

The applicable zonal charges are set out below.

A. DEP Zone

A.1.1 The base rates for scheduling and dispatch services are as follows:

A.1.1.1 For Point-to-Point service reserved for an Annual Period or a Monthly Period, the charge for service supplied in a Monthly Period shall not exceed the Transmission Customer's Monthly Period transmission reservation multiplied by $36.50 per MW-month. For a Network Integration Transmission Service Customer, the charge for service supplied in a month shall be the Customer's load coincident with the hour of the DEP monthly Transmission System Peak during the month, multiplied by $36.50 per MW.

A.1.1.2 For service reserved for a Weekly Period, the charge for service supplied in a Weekly Period shall not exceed the Transmission Customer's Weekly Period transmission reservation multiplied by $8.42 per MW-week. However, the sum of the charges for Weekly Period service supplied in a Monthly Period shall not exceed the charges for the same amount of capacity reserved for a Monthly Period.

A.1.1.3 For service reserved for a Daily Period, the charge for service supplied in a Daily Period shall not exceed the Transmission Customer's Daily Period transmission reservation multiplied by $1.68 per MW-day for on-peak days and $1.20 per MW-day for off-peak days. However, the sum of the charges for Daily Period service supplied in a Weekly Period shall not exceed the charges for the same amount of capacity reserved for a Weekly Period.

A.1.1.4 For service reserved for an Hourly Period, the charge for service supplied in an Hourly Period shall not exceed the Transmission Customer's Hourly Period

transmission reservation multiplied by $0.11 per MW-hour for on-peak hours and $0.05/MW-hour for off-peak hours. However, the sum of the charges for Hourly Period service supplied in a Daily Period shall not exceed the charges for the same amount of capacity reserved for a Daily Period.

A.1.2 The billing determinant shall be the Transmission Customer's Reserved Capacity for Point-To-Point Transmission Service or the Transmission Customer's Network Load for the applicable month for Network Integration Transmission Service.

B. DEF Zone

B.1.1 The charge for Scheduling, System Control and Dispatch Service is

B.1.1.1 $105.87/MW month for service in a Monthly Period or an Annual Period.

B.1.1.2 $24.43/MW week for service in a Weekly Period.

B.1.1.3 $4.89/MW day, for service in a Daily Period for on-peak days and $3.49/MW day for off-peak days, provided that the maximum charge in any Weekly Period shall be no greater than the product of the maximum service reserved in any Daily Period in that Weekly Period and the maximum charge for Weekly Period service.

B.1.1.4 $0.31/MW hour for service in an Hourly Period for on-peak hours and $0.15/MW hour for off-peak hours. The maximum charge in any Daily Period shall not exceed the product of the maximum service reserved in any Hourly Period in that Daily Period and the maximum charge for Daily Period service; and the maximum charge in any Weekly Period shall not exceed the product of the maximum service reserved in any Hourly Period in that Weekly Period and the maximum charge for Weekly Period service.

B.1.2 The billing determinant shall be the Transmission Customer's Point-To-Point Transmission Service or the Transmission Customer's Network Load for the applicable month for Network Integration Transmission Service.

C. DEC Zone

C.1.1 The Point to Point Transmission Service Customer shall compensate the Transmission Provider each month for Scheduling, System Control and Dispatch Service at the sum of the applicable charges set forth below:

C.1.1.1 For Yearly service, one-twelfth of the Annual Schedule 1 Rate determined pursuant to Exhibit A to this Schedule, multiplied by the amount of Reserved Capacity per year (expressed in kW).

C.1.1.2 For Monthly service, the Monthly Schedule 1 Rate determined pursuant to Exhibit A to this Schedule, multiplied by the amount of Reserved Capacity per month (expressed in kW).

C.1.1.3 For Weekly service, the Weekly Schedule 1 Rate determined pursuant to Exhibit A to this Schedule, multiplied by the amount of Reserved Capacity per week (expressed in kW).

C.1.1.4 For service on on-peak days, the Daily Schedule 1 On-Peak Rate determined pursuant to Exhibit A to this Schedule, multiplied by the amount of Reserved Capacity per day (expressed in kW).

C.1.1.5 For service on off-peak days, the Daily Schedule 1 Off-Peak Rate determined pursuant to Exhibit A to this Schedule, multiplied by the amount of Reserved Capacity per day (expressed in kW).

C.1.1.6 For service on on-peak hours, the Hourly Schedule 1 On-Peak Rate determined pursuant to Exhibit A to this Schedule, multiplied by the amount of Reserved Capacity per hour (expressed in kW).

C.1.1.7 For service on off-peak hours, the Hourly Schedule 1 Off-Peak Rate determined pursuant to Exhibit A to this Schedule, multiplied by the amount of Reserved Capacity per hour (expressed in kW).

The Schedule 1 Annual Revenue Requirement for purposes of Scheduling, System Control and Dispatch Service for Network Integration Transmission Service shall be as determined in Schedule 10-B, Exhibit B. The Network Integration Transmission Service Customer shall compensate the Transmission Provider each month at the Transmission Customer's monthly Load Ratio Share calculated on a rolling twelve month basis multiplied by one-twelfth of the annual revenue requirements as determined in Schedule 10-B, Exhibit B.

Exhibit A to Schedule 1

Scheduling, System Control and Dispatch Service Rates in the DEC Zone

1. The Annual Schedule 1 Rate for a calendar year is equal to A / B, where:

   - A = the Schedule 1 Annual Revenue Requirement for the calendar year as determined in Schedule 10-B, Exhibit B

   - B = the average of the Transmission Provider's twelve Monthly Transmission System Peaks (expressed in kilowatts) for the calendar year as defined in Section 34.3 of the Tariff

2. The Monthly Schedule 1 Rate is equal to the Annual Schedule 1 Rate divided by twelve (12).

3. The Weekly Schedule 1 Rate is equal to the Annual Schedule 1 Rate divided by fifty-two (52).

4. The Daily Schedule 1 On-Peak Rate is equal to the Weekly Schedule 1 Rate divided by five (5).

5. The Daily Schedule 1 Off-Peak Rate is equal to the Weekly Schedule 1 Rate divided by seven (7).

6. The Hourly Schedule 1 On-Peak Rate is equal to the Daily Schedule 1 On-Peak Rate divided by sixteen (16).

7. The Hourly Schedule 1 Off-Peak Rate is equal to the Daily Schedule 1 Off-Peak Rate divided by twenty-four (24).

SCHEDULE 2

REACTIVE SUPPLY AND VOLTAGE CONTROL FROM GENERATION OR OTHER SOURCES SERVICE

In order to maintain transmission voltages on the Transmission Provider's transmission facilities within acceptable limits, generation facilities and non-generation resources capable of providing this service that are under the control of the control area operator are operated to produce (or absorb) reactive power. Thus, Reactive Supply and Voltage Control from Generation or Other Sources Service must be provided for each transaction on the Transmission Provider's transmission facilities. The amount of Reactive Supply and Voltage Control from Generation or Other Sources Service that must be supplied with respect to the Transmission Customer's transaction will be determined based on the reactive power support necessary to maintain transmission voltages within limits that are generally accepted in the region and consistently adhered to by the Transmission Provider.

Reactive Supply and Voltage Control from Generation or Other Sources Service is to be provided directly by the Transmission Provider (if the Transmission Provider is the Control Area operator) or indirectly by the Transmission Provider making arrangements with the Control Area operator that performs this service for the Transmission Provider's Transmission System. The Transmission Customer must purchase this service from the Transmission Provider or the Control Area operator. The charges for such service will be based on the rates set forth below. To the extent the Control Area operator performs this service for the Transmission Provider, charges to the Transmission Customer are to reflect only a pass-through of the costs charged to the Transmission Provider by the Control Area operator. Although the Transmission Customer is required to take this ancillary service from the Transmission Provider, the Transmission Customer may reduce the charge for this service to the extent that the Transmission Customer

can supply reactive power and voltage control to the Transmission Provider's Transmission System.

Charges:

The charge for Reactive Supply and Voltage Control from Generation Sources Service shall be based on the Zone in which the energy being transmitted is consumed or, if the energy is transmitted to an interface with another transmission provider, the Zone in which transmission service is last provided by the Transmission Provider, except in the case of energy being transmitted to serve Network Load under Part III of this Tariff in which case the applicable charge will be under Section 34 of the Tariff.

The applicable zonal charges are set out below.

A. DEP Zone

A.2.1 The applicable rates for Reactive Supply and Voltage Control from Generation Sources (RSVC) Service shall be as follows:

A.2.1.1 For service reserved for an Annual Period or a Monthly Period, the rate shall not exceed $88.80 per MW-month.

A.2.1.2 For service reserved for a Weekly Period, the rate shall not exceed $20.49 per MW-week.

A.2.1.3 For service reserved for a Daily Period, the rate shall not exceed $4.10 per MW-day for on-peak days and $2.93 per MW-day for off-peak days.

A.2.1.4 For service reserved for an Hourly Period, the rate shall not exceed $0.26 per MW-hour for on-peak hours and $0.12 per MW-hour for off-peak hours.

A.2.2 The charge for RSVC Service required for a customer will be as follows:

A.2.2.1 For a Network Integration Transmission Service customer, the charge in a month shall be the customer's load coincident with the hour of the DEP Monthly Transmission System Peak during the month multiplied by the monthly rate for RSVC Service.

A.2.2.2 For a Point-to-Point reservation, the charge shall be as follows:

A.2.2.2.1 For service reserved for an Annual Period or a Monthly Period, the charge for service supplied in a Monthly Period shall be the customer's Monthly Period transmission reservation multiplied by the Monthly Period rate for RSVC Service.

A.2.2.2.2 For service reserved for a Weekly Period, the charge for service supplied in a Weekly Period shall be the customer's Weekly Period transmission reservation multiplied by the Weekly Period rate for RSVC Service. However, the sum of the charges for Weekly Period service supplied in a Monthly Period shall not exceed the charges for the same amount of capacity reserved for a Monthly Period.

A.2.2.2.3 For service reserved for a Daily Period, the charge for service supplied in a Daily Period shall be the Customer's Daily Period transmission reservation multiplied by the Daily Period rate for RSVC Service. However, the sum of the charges for Daily Period service supplied in a Weekly Period shall not exceed the charges for the same amount of capacity reserved for a Weekly Period.

A.2.2.2.4 For service reserved for an Hourly Period, the charge for service supplied in an Hourly Period shall be the Customer's Hourly Period transmission reservation multiplied by the Hourly Period rate for RSVC Service. However, the sum of the charges for Hourly Period service supplied in a Daily Period shall not exceed the charges for the same amount of capacity reserved for a Daily Period.

A.2.3 A Transmission Customer purchasing Reactive Supply and Voltage Control from Generating Sources Service shall purchase an amount of service equal to the Transmission Customer's Reserved Capacity for Point-To-Point Transmission Service or the Transmission Customer's Network Load for the applicable month for Network Integration Transmission Service.

B. DEF Zone

B.2.1 A Transmission Customer purchasing Reactive Supply and Voltage Control from Generating Sources Service shall purchase an amount of service equal to the Transmission Customer's Point-To-Point Transmission Service or the Transmission Customer's Network Load for the applicable month for Network Integration Transmission Service.

B.2.2 The charge for Reactive Supply and Voltage Control from Generation Sources Service is no greater than:

B.2.2.1 $212.96/MW month for service for an Annual Period or a Monthly Period, which is the sum of the following unit-specific rates:

Line No.	Power Station	Unit	Rate per MW/Mo.

Line No.	Power Station	Unit	Rate per MW/Mo.
1	Crystal River	North Unit 4	$ 4.66
2	Crystal River	North Unit 5	$ 5.19
3	Anclote	Unit 1	$ 1.57
4	Anclote	Unit 2	$ 1.75
5	Bayboro	Unit 1	$ 0.13
6	Bayboro	Unit 2	$ 0.14
7	Bayboro	Unit 3	$ 0.08
8	Bayboro	Unit 4	$ 0.13
9	Bartow CTs	Unit 1	$ 0.23
10	Bartow CTs	Unit 2	$ 0.23
11	Bartow CTs	Unit 3	$ 0.23
12	Bartow CTs	Unit 4	$ 0.23
13	Bartow CC	4A	$ 4.17
14	Bartow CC	4B	$ 4.17
15	Bartow CC	4C	$ 4.17
16	Bartow CC	4D	$ 4.17
17	Bartow CC	4S	$ 5.86
18	Citrus CC	PB1-CTA	$ 11.49
19	Citrus CC	PB1-CTB	$ 11.49
20	Citrus CC	PB1-ST1	$ 12.68
21	Citrus CC	PB2-CTA	$ 9.44
22	Citrus CC	PB2-CTB	$ 9.44
23	Citrus CC	PB2-ST2	$ 10.43
24	Debary	Unit 2	$ 0.22
25	Debary	Unit 3	$ 0.21
26	Debary	Unit 4	$ 0.23
27	Debary	Unit 5	$ 0.21
28	Debary	Unit 6	$ 0.20
29	Debary	Unit 7	$ 1.41
30	Debary	Unit 8	$ 1.38
31	Debary	Unit 9	$ 1.43
32	Debary	Unit 10	$ 1.34
33	Hines CC	PB1-CTA	$ 6.88
34	Hines CC	PB1-CTB	$ 6.88
35	Hines CC	PB1-STS	$ 7.39
36	Hines CC	PB2-CTA	$ 6.39
37	Hines CC	PB2-CTB	$ 6.39
38	Hines CC	PB2-STS	$ 6.09

Line No.	Power Station	Unit	Rate per MW/Mo.
39	Hines CC	PB3-CTA	$ 7.74
40	Hines CC	PB3-CTB	$ 7.74
41	Hines CC	PB3-STS	$ 7.91
42	Hines CC	PB4-CTA	$ 6.29
43	Hines CC	PB4-CTB	$ 6.29
44	Hines CC	PB4-STS	$ 7.33
45	Intercession City	Unit 1	$ 0.13
46	Intercession City	Unit 2	$ 0.12
47	Intercession City	Unit 3	$ 0.11
48	Intercession City	Unit 4	$ 0.10
49	Intercession City	Unit 5	$ 0.11
50	Intercession City	Unit 6	$ 0.20
51	Intercession City	Unit 7	$ 1.45
52	Intercession City	Unit 8	$ 1.19
53	Intercession City	Unit 9	$ 1.45
54	Intercession City	Unit 10	$ 1.54
55	Intercession City	Unit 11	$ 1.37
56	Intercession City	Unit 12	$ 2.25
57	Intercession City	Unit 13	$ 2.25
58	Intercession City	Unit 14	$ 2.25
59	Suwannee River CTs	Unit 1	$ 0.35
60	Suwannee River CTs	Unit 2	$ 0.33
61	Suwannee River CTs	Unit 3	$ 0.44
62	Tiger Bay	CT1	$ 3.12
63	Tiger Bay	ST1	$ 1.24
64	Univ. Fla.	CT1	$ 0.93
	DEF Fleet		**$ 212.96**

B.2.2.2 $49.14/MW week for service for a Weekly Period.

B.2.2.3 $9.83/MW day for service in a Daily Period for on-peak days and $7.02/MW day for off-peak days; provided that the maximum charge in any Weekly Period shall be no greater than the product of the maximum service reserved in any Daily Period in that Weekly Period and the maximum charge for Weekly Period service.

B.2.2.4 $0.61/MW hour for service in an Hourly Period for on-peak hours and $0.29/MW hour for off-peak hours. The maximum charge in any Daily Period shall not exceed the product of the maximum service reserved in any Hourly Period in that Daily Period and the maximum charge for Daily Period service; and the maximum charge in any Weekly Period shall not exceed the product of the maximum service reserved in any Hourly Period in that Weekly Period and the maximum charge for Weekly Period service.

B.2.3 **Removal of Unit-Specific Schedule 2 Rate.** In the event a unit listed in Section B.2.2.1 is retired, mothballed, ceases to operate, or transferred to an owner different than DEF, DEF will submit to the Commission a filing under Section 205 of the Federal Power Act to remove that unit's rate for supplying Reactive Supply and Voltage Control Service under this Schedule 2. In the Section 205 filing to remove the unit-specific rate, DEF will request an effective date that coincides with the date the unit will be retired, mothballed, cease to operate, or transferred to an owner different than DEF. If DEF submits a Section 205 filing to remove a unit-specific rate listed in Section B.2.2.1, challenges to such filing shall be limited to the changes required to remove the unit-specific rate or rates identified in the Section 205 filing from Section B.2.2.1 and may not challenge other unit-specific rates listed in Section B.2.2.1 that are unchanged; provided however, that the Schedule 2 charges in Sections B.2.2.1 through B.2.2.4 will be updated to reflect the removal of the unit-specific rate identified in the Section 205 filing. Nothing in this Section B.2.3 shall be construed as affecting the right of any Transmission Customer under this Tariff, or any other entity, to protest, comment, or otherwise exercise its rights under the Federal Power Act with respect to such unit-specific Section

205 filing except as specifically limited above, or to seek to modify prospectively under Section 206 of the Federal Power Act, in whole or in part, the DEF rates set forth in Section B.2.2 of this Schedule 2.

B.2.4 **Addition of Unit-Specific Schedule 2 Rate.** DEF may submit a filing under Section 205 of the Federal Power Act to add a new unit(s) and associated unit-specific Schedule 2 rate(s) to the list in Section B.2.2.1. If DEF submits a Section 205 filing to add a unit-specific rate to the list in Section B.2.2.1, challenges to such filings shall be limited to the new unit-specific rate or rates proposed and may not be used to revise, update, or challenge any of the existing unit-specific rates in Section B.2.2.1; provided however, that the additional unit-specific Schedule 2 rate will be added to the table of unit-specific rates in Section B.2.2.1 and the Schedule 2 charges in Sections B.2.2.1 through B.2.2.4 will be updated to reflect the additional unit-specific rate. For avoidance of doubt, DEF has the right to propose the new unit-specific rate or rates based on any rate methodology and use a divisor reflecting updated annual billing demands for the test period reflected in the costs contained in the numerator of the new unit-specific rate(s) being added to Section B.2.2.1, provided that nothing in this Section B.2.4 shall be construed as affecting the right of any Transmission Customer under this Tariff, or any other entity, to protest, comment, or otherwise exercise its rights under the Federal Power Act with respect to such unit-specific Section 205 filing, except as specifically limited in the second sentence above, or to seek to modify prospectively under Section 206 of the Federal Power Act, in whole or in part, the DEF rates set forth in Section B.2.2 of this Schedule 2.

C. DEC Zone

C.2.1 The Point to Point Transmission Service Customer shall compensate the Transmission Provider each month for Reactive Supply and Voltage Control from Generation Sources Service at the sum of the applicable charges set forth below:

C.2.1.1 For Monthly service, $.20/kW of Reserved Capacity per month.

C.2.1.2 For Weekly service, $.046/kW of Reserved Capacity per week.

C.2.1.3 For service on on-peak days, $.009/kW of Reserved Capacity per on peak days.

C.2.1.4 For service on off-peak days, $.0066/kW of Reserved Capacity per off peak days.

C.2.1.5 For service on on-peak hours, $.0006/kW of Reserved Capacity per on peak hours.

C.2.1.6 For service on off-peak hours, $.00027/kW of Reserved Capacity per off peak hours.

The annual revenue requirements for purposes of Reactive Supply and Voltage Control from Generation Sources Service for Network Integration Transmission Service shall be $40,152,000. The Network Integration Transmission Service Customer shall compensate the Transmission Provider each month at the sum of the Transmission Customer's monthly Load Ratio Share calculated on a rolling twelve month basis multiplied by one-twelfth of the annual revenue requirements of $40,152,000.

SCHEDULE 3

REGULATION AND FREQUENCY RESPONSE SERVICE

Regulation and Frequency Response Service is necessary to provide for the continuous balancing of resources (generation and interchange) with load and for maintaining scheduled Interconnection frequency at sixty cycles per second (60 Hz). Regulation and Frequency Response Service is accomplished by committing on-line generation whose output is raised or lowered (predominantly through the use of automatic generating control equipment) and by other non-generation resources capable of providing this service as necessary to follow the moment-by-moment changes in load. The obligation to maintain this balance between resources and load lies with the Transmission Provider (or the Control Area operator that performs this function for the Transmission Provider). The Transmission Provider must offer this service when the transmission service is used to serve load within its Control Area. The Transmission Customer must either purchase this service from the Transmission Provider or make alternative comparable arrangements to satisfy its Regulation and Frequency Response Service obligation. The Transmission Provider will take into account the speed and accuracy of regulation resources in its determination of Regulation and Frequency Response reserve requirements, including as it reviews whether a self-supplying Transmission Customer has made alternative comparable arrangements. Upon request by the self-supplying Transmission Customer, the Transmission Provider will share with the Transmission Customer its reasoning and any related data used to make the determination of whether the Transmission Customer has made alternative comparable arrangements. The amount of and charges for Regulation and Frequency Response Service are set forth below. To the extent the Control Area operator performs this service for the Transmission Provider, charges to the Transmission Customer are to reflect only a pass-through

of the costs charged to the Transmission Provider by that Control Area operator. If the Transmission Customer elects to provide this service itself or by contracting with a third party, the Transmission Customer or the third party provider shall meet the applicable NERC, SERC, and VACAR requirements for this service.

Charges:

The charge for Regulation and Frequency Response Service shall be based on the Zone in which the load is located. The applicable zonal charges are set out below.

A. DEP Zone

A.3.1 A Transmission Customer purchasing Regulation and Frequency Response Service will be required to purchase an amount of Customer Regulation and Frequency Response Capacity (TCLoad) equal to 1.2 percent of the Transmission Customer's reserved capacity for Point-to-Point Transmission Service or 1.2 percent of the Network Integration Transmission Customer's maximum hourly network load responsibility during each service period (e.g., Daily Period or Weekly Period) for service periods of less than one month or 1.2 percent of the Network Integration Transmission Customer's hourly network load coincident with the hour of the Transmission Provider's monthly transmission peak for Network Integration Transmission Customers subscribing to service periods of a month or longer. The billing determinants for this service shall be reduced by any portion of the 1.2 percent purchase obligation that a Transmission Customer obtains from third parties or supplies itself; provided, however, that the Transmission Customer shall be responsible for installing any telemetering or other equipment necessary for multiple parties to provide Regulation and Frequency Response Service in a manner that is consistent with Good Utility Practice.

A.3.2 The maximum rates for Regulation and Frequency Response (RFR) Service shall be as follows for the service periods indicated:

a. For service provided for an Annual or Monthly Period, the rate shall not exceed $3,960 per MW-month.

b. For service provided for a Weekly Period, the rate shall not exceed $913.85 per MW-week.

c. For service provided for a Daily Period, the rate shall not exceed $182.77 per MW-day for on-peak days and $130.55 per MW-day for off-peak days.

A.3.3 The charge for Regulation and Frequency Response Service will be as follows:

RFRC = RFRR x TCLoad

Where: RFRC is the charge the Transmission Customer would pay for Regulation and Frequency Response Service.

RFRR is the applicable Regulation and Frequency Response capacity rate.

TCLoad is 1.2% of Transmission Customer's load or reservation for which DEP is supplying Regulation and Frequency Response Service during the service period as determined in Section A.3.1.

1.2% is the percentage of regulating reserves that DEP carries for the DEP system.

A.3.3.1 The sum of the charges for Weekly Period service supplied during a Monthly Period shall not exceed the charges for the same amount of TCLoad purchased for a Monthly Period.

A.3.3.2 The sum of the charges for Daily Period service supplied during a Weekly Period shall not exceed the charges for the same amount of TCLoad purchased for a Weekly Period.

A.3.4 Regulation Service with Customer Dispatch of Customer Resource

A.3.4.1 A Transmission Customer who wishes to assume dispatch responsibilities for all or a portion of the Transmission Customer's resource(s) must demonstrate that it supplies such service in accordance with NERC and SERC criteria. The Transmission Customer will be charged as stated in Section A.3.3 above. If DEP reasonably believes that the Transmission Customer's Regulation and Frequency Response requirement is excessive, such that the Transmission Customer will impose costs that are substantially dissimilar to those imposed by other Transmission Customers and DEP, DEP may file for approval of a separate Regulation and Frequency Response charge, pursuant to § 205 of the Federal Power Act; such separate charge to be set out in the Transmission Customer's Service Agreement. DEP will provide the requested transmission service to the Transmission Customer pending a final determination as to the proposed charges.

A.3.4.2 Telemetry of load and generation information to DEP's Energy Control Center (ECC), or its successor facility, for the purposes of control and metering of services is required for Transmission Customer dispatch of resources. The Transmission Customer may provide a means to minimize the amount of Regulation and Frequency Response Service required through the installation and use of automatic generating controls and load control computers at the Transmission Customer's facilities to match the Transmission Customer's generation and load in real time. DEP will make reasonable efforts to accommodate such Transmission Customer equipment. Expenses associated

with telemetry of information to the ECC and any other accommodation of a Transmission Customer's control system shall be covered under Direct Assignment Facilities. The Transmission Customer's load and resource energy shall be telemetered and measured regardless of whether the Transmission Customer purchases Regulation and Frequency Response Service from DEP or contracts with another entity for such service unless otherwise mutually agreed upon by DEP and the Transmission Customer in which case such arrangements will be included in the Service Agreement. Continuous measurement is necessary to ensure that DEP is compensated for any Regulation and Frequency Response Service provided, either as a contracted service or as a service provided to make up for loss of such service from another source.

A.3.5 Regulation Service with Dynamic Scheduling

A.3.5.1 In some instances a Transmission Customer may have a resource supply agreement which permits all or a portion of its load to be served from another control area. In such instances and with the cooperation and assistance of such control area operator, the Transmission Customer may employ dynamic scheduling to serve its load from such control area provided the required technical and operating agreements can be reached and approved by the applicable regulatory agencies. For a Transmission Customer with dynamic scheduling of all or a portion of its load to another control area, the following cost allocations shall apply for Regulation and Frequency Response service:

A.3.5.1.1 For normal operation, Regulation and Frequency Response service is not required for a Transmission Customer with dynamic scheduling as described herein, provided that telemetry is operational and transmission paths are available to the supplying control area.

A.3.5.1.2 For telemetry failures as defined in the Transmission Customer's Service Agreement, the Transmission Customer must rely on manually implemented power schedules to meet its estimated load. The Service Agreement shall set out the terms and conditions under which DEP will, upon such telemetry system failure, provide the Transmission Customer with Regulation and Frequency Response Service at those telemetry point(s) experiencing the failure.

A.3.5.1.3 Telemetry of load and generation information to the ECC, for the purposes of control and metering of services is required for dynamic scheduling of resources. DEP will make reasonable efforts to accommodate such Transmission Customer equipment required for dynamic scheduling. Expenses associated with telemetry of information to the ECC and any other accommodation of a Transmission Customer's control system shall be covered under Direct Assignment Facilities.

B. DEF Zone

B.3.1 The charge for Regulation and Frequency Response Service shall be no greater than the applicable rate below per MW of Point-To-Point Transmission Service or of the Transmission Customer's Network Load for the applicable month for Network Integration Transmission Service:

B.3.1.1 $177.85/MW month for service in an Annual Period or a Monthly Period.

B.3.1.2 $41.04/MW week for service in a Weekly Period.

B.3.1.3 $8.21/MW day for service in a Daily Period for on-peak days and $5.86/MW day for off-peak days, provided that the maximum charge in any Weekly Period shall be no greater than the product of the maximum service reserved in any Daily Period in that Weekly Period and the maximum charge for Weekly Period service.

B.3.1.4 $0.51/MW hour for service in an Hourly Period for on-peak hours and $0.24/MW hour for off-peak hours. The maximum charge in any Daily Period shall not exceed the product of the maximum service reserved in any Hourly Period in that Daily Period and the maximum charge for Daily Period service; and the maximum charge in any Weekly Period shall not exceed the product of the maximum service reserved in any Hourly Period in that Weekly Period and the maximum charge for Weekly Period service.

B.3.2 Self-Supply of Service

A Transmission Customer located in the Transmission Provider's Control Area shall purchase Regulation and Frequency Response Service from the Transmission Provider

unless it provides the service itself or purchases it from a third party through automatic generation control or dynamic scheduling.

C. DEC Zone

C.3.1 The Point to Point Transmission Service Customer shall compensate the Transmission Provider each month for Regulation and Frequency Response Service provided by the Transmission Provider at the sum of the applicable charges set forth below:

C.3.1.1 For Monthly service, $.038/kW of Reserved Capacity per month.

C.3.1.2 For Weekly service, $.009/kW of Reserved Capacity per week.

C.3.1.3 For service on on-peak days, $.002/kW of Reserved Capacity per on peak days.

C.3.1.4 For service on off-peak days, $.0013/kW of Reserved Capacity per off peak days.

C.3.1.5 For service on on-peak hours, $.0001/kW of Reserved Capacity per on peak hours.

C.3.1.6 For service on off-peak hours, $.00005/kW of Reserved Capacity per off peak hours.

The annual revenue requirements for purposes of Regulation and Frequency Response Service for Network Integration Transmission Service shall be $7,628,880. The Network Integration Transmission Service Customer shall compensate the Transmission Provider each month for Regulation and Frequency Response Service provided by the Transmission Provider at the sum of the Transmission Customer's monthly Load Ratio Share calculated on a rolling twelve month basis multiplied by one-twelfth of the annual revenue requirements of $7,628,880.

SCHEDULE 3A

Generator Regulation Service

[DEF Zone]

Generator Regulation Service is necessary to provide for on-line generation which is available to respond to schedule ramps required to start, change or end a transmission schedule to another Control Area and for maintaining scheduled interconnection frequency at sixty cycles per second (60 Hz). Generator Regulation Service is accomplished by committing on-line generation whose output is raised or lowered (predominantly through the use of automatic on-line generation equipment) as necessary to follow the moment-by-moment differences between the generator's output and the ramping transmission schedule. The obligation to provide on-line resources to implement schedules with other Control Areas lies with the Transmission Provider (or the Control Area operator that performs this function for the Transmission Provider). The Transmission Provider must offer this service when transmission service is provided for a generator located in the Control Area that is not identified in Appendix 1 to this Schedule to an interface with another Control Area. The Transmission Customer that schedules service from a generator located in the Transmission Provider's Control Area that is not identified in Appendix 1 to an interface with another Control Area must either purchase this service from the Transmission Provider or make alternative comparable arrangements to satisfy its Generator Regulation Service obligation. The amount of and charges for Generator Regulation Service are set forth below. To the extent the Control Area operator performs this service for the Transmission Provider, charges to the Transmission Customer are to reflect only a pass-through of the costs charged to the Transmission Provider by that Control Area operator.

Charges:

The charge for Generator Regulation Service shall be made at the applicable rate below per MW of Point-To-Point Transmission Service or of the Transmission Customer's Network Load for the applicable month for Network Integration Transmission Service:

$177.85/MW month for service in an Annual Period or a Monthly Period.

$41.04/MW week for service in a Weekly Period.

$8.21/MW day for service in a Daily Period for on-peak days and

$5.86/MW day for off-peak days; provided that the maximum charge in any Weekly Period shall be no greater than the product of the maximum service reserved in any Daily Period in that Weekly Period and the maximum charge for Weekly Period service.

$0.51/MW hour for service in an Hourly Period for on-peak hours and $0.24/MW hour for off-peak hours. The maximum charge in any Daily Period shall not exceed the product of the maximum service reserved in any Hourly Period in that Daily Period and the maximum charge for Daily Period service; and the maximum charge in any Weekly Period shall not exceed the product of the maximum service reserved in any Hourly Period in that Weekly Period and the maximum charge for Weekly Period service.

Appendix 1 to Schedule 3A

Generators in the DEF Zone for Which Generator Regulation Service Is Provided Pursuant to a Separate Agreement

The Transmission Provider has entered into agreements with the following generators that provide for the continuous balancing of generation with energy schedules to other Control Areas:

Orange Cogeneration Limited Partnership

Central Power & Lime, Inc.

City of Tallahassee (C.H. Corn Hydro)

Southeastern Power Administration (Woodruff Dam)

SCHEDULE 4

ENERGY IMBALANCE SERVICE

Energy Imbalance Service is provided when a difference occurs between the scheduled and the actual delivery of energy to a load located within a Control Area over a single hour. The Transmission Provider must offer this service when the transmission service is used to serve load within its Control Area. The Transmission Customer must either purchase this service from the Transmission Provider or make alternative comparable arrangements, which may include use of non-generation resources capable of providing this service, to satisfy its Energy Imbalance Service obligation. To the extent the Control Area operator performs this service for the Transmission Provider, charges to the Transmission Customer are to reflect only a pass-through of the costs charged to the Transmission Provider by that Control Area operator. The Transmission Provider may charge a Transmission Customer a penalty for either hourly energy imbalances under this Schedule or a penalty for hourly generator imbalances under Schedule 13 for imbalances occurring during the same hour, but not both unless the imbalances aggravate rather than offset each other.

4.1 The Transmission Provider shall establish charges for energy imbalance based on the deviation bands as follows: (i) deviations within +/- 1.5 percent (with a minimum of 2 MW) of the scheduled transaction to be applied hourly to any energy imbalance that occurs as a result of the Transmission Customer's scheduled transaction(s) will be netted on a monthly basis and settled financially, at the end of the month, at 100 percent of incremental or decremental cost; (ii) deviations greater than +/- 1.5 percent up to 7.5 percent (or greater than 2 MW up to 10 MW) of the scheduled transaction to be applied hourly to any energy imbalance that occurs as a result of the Transmission Customer's scheduled transaction(s) will be settled financially, at the end of

each month, at 110 percent of incremental cost or 90 percent of decremental cost, and (iii) deviations greater than +/- 7.5 percent (or 10 MW) of the scheduled transaction to be applied hourly to any energy imbalance that occurs as a result of the Transmission Customer's scheduled transaction(s) will be settled financially, at the end of each month, at 125 percent of incremental cost or 75 percent of decremental cost.

4.2

For purposes of this Schedule, incremental cost and decremental cost represent the Transmission Provider's actual average hourly cost of the last 10 MW dispatched for any purpose, e.g., to supply the Transmission Provider's Native Load Customers, correct imbalances, or make off-system sales, based on the replacement cost of fuel, unit heat rates, start-up costs (including any commitment and redispatch costs), shut down costs, emissions and other environmental costs, incremental operation and maintenance costs, transmission losses, and purchased and interchange power costs and taxes, as applicable. Start-up cost will also include the cost to cycle a unit back on-line that was removed from service to accommodate an excess Energy Imbalance purchase. Transmission Provider utilizes PCI production cost modeling software to determine the incremental and decremental cost. Transmission Provider uses actual generation and load parameters and spot value of relevant commodities as data inputs to the production cost model.

4.2.1 Credits for Energy Imbalance Revenues

The Transmission Provider will credit revenues that it receives in excess of the incremental costs it incurs to accommodate energy imbalances ("penalty revenues") to all non-offending Transmission Customers (including Affiliated Transmission Customers)

and to the Transmission Provider on behalf of its own customers (Native Load Customers). The credits shall be calculated and allocated as set out below.

The penalty revenues for which the Transmission Provider provides credits consist of the following: for each undersupply energy imbalance in excess of the deviation band in an hour, the amount by which the Transmission Provider's revenues for such imbalance pursuant to Section 4.1 exceed the incremental cost incurred to supply that imbalance.

The imbalance penalty revenues calculated for each hour shall be credited based on the ratio of the transmission revenues from each Network Transmission Customer or Point-to-Point Transmission Customer that did not experience an energy imbalance in excess of the deviation band in an hour to the sum of the transmission revenues from all Transmission Customers that did not experience energy imbalances in the hour. A Transmission Customer that experiences an energy imbalance in excess of the first tier deviation band in an hour shall not receive a credit for that hour.

4.2.2 The Transmission Provider shall disburse accumulated penalty revenues, plus interest calculated in accord with 18 C.F.R. § 35.19a, when the accumulated amount of penalty revenues collected under Section 4.1 of this Schedule and Schedule 13 reaches $100,000. However, effective as of April 1, 2009 and every April 1st thereafter, if a distribution has not been made within the previous twelve-month period, a distribution will be made no later than April 1 of that calendar year.

SCHEDULE 5

OPERATING RESERVE - SPINNING RESERVE SERVICE

Spinning Reserve Service is needed to serve load immediately in the event of a system contingency. Spinning Reserve Service may be provided by generating units that are on-line and loaded at less than maximum output and by non-generation resources capable of providing this service. The Transmission Provider must offer this service when the transmission service is used to serve load within its Control Area. The Transmission Customer must either purchase this service from the Transmission Provider or make alternative comparable arrangements to satisfy its Spinning Reserve Service obligation. The amount of and charges for Spinning Reserve Service are set forth below. To the extent the Control Area operator performs this service for the Transmission Provider, charges to the Transmission Customer are to reflect only a pass-through of the costs charged to the Transmission Provider by that Control Area operator. If the Transmission Customer elects to provide this service itself or by contracting with a third party, the Transmission Customer or the third party provider shall meet the applicable NERC, SERC, and VACAR requirements for this service.

Charges:

The charge for Spinning Reserve Service shall be based on the Zone in which the load is located. The applicable zonal charges are set out below.

A. DEP Zone

A.5.1 Spinning Reserve Capacity

A Transmission Customer purchasing Spinning Reserve Service will be required to purchase an amount of Customer Spinning Reserve Capacity (CSR) equal to 1.77 percent of the Transmission Customer's reserved capacity for Point-to-Point Transmission

Service or 1.77 percent of the Network Integration Transmission Customer's maximum hourly network load responsibility during each service period (e.g., Daily Period or Weekly Period) for service periods less than one month or 1.77 percent of the Network Integration Transmission Customer's hourly network load coincident with the hour of the Transmission Provider's monthly transmission peak for Network Integration Transmission Customers subscribing to service periods of a month or longer. The billing determinants for this service shall be reduced by any portion of the 1.77 percent purchase obligation that a Transmission Customer obtains from third parties or supplies itself.

A.5.2 Spinning Reserve Capacity Rate

The maximum rates for Spinning Reserve Capacity Rate (SRR) shall be as follows for the service periods indicated:

a. For service provided for an Annual or Monthly Period, the rate shall not exceed $3,960 per MW-month.

b. For service provided for Weekly Period, the rate shall not exceed $913.85 per MW-week.

c. For service provided for a Daily Period, the rate shall not exceed $182.77 per MW-day for on-peak days and $130.55 per MW-day for off-peak days.

A.5.3 Spinning Reserve Capacity Charges

The Transmission Customer's Spinning Reserve Capacity Charge for the Monthly Period is as follows:

SRC = CSR X SRR

Where:

SRC is the Transmission Customer's Spinning Reserve Capacity Charge.
CSR is the amount of Spinning Reserve Capacity purchased by the

Transmission Customer during the service period as determined in Section A.5.1.
SRR is the applicable Spinning Reserve Capacity Rate.

A.5.3.1 The sum of the charges for Weekly Period service supplied during a Monthly Period shall not exceed the charges for the same amount of capacity purchased for a Monthly Period.

A.5.3.2 The sum of the charges for Daily Period service supplied during a Weekly Period shall not exceed the charges for the same amount of capacity purchased for a Weekly Period.

A.5.4 Availability and Application of Spinning Reserve Capacity

Spinning reserve capacity shall be available in an amount up to 50% of the Transmission Customer's capacity reservation for Point-to-Point service or up to the Network Integration Customer's peak network load for network service for the first ten (10) minutes immediately following an unplanned outage of a Transmission Customer's generation resource. If Spinning Reserve Service is purchased from multiple suppliers or self-supplied by the Transmission Customer, the amount of spinning reserve service capacity that DEP must keep on line shall be reduced by the amount of spinning reserve service purchased elsewhere or self-supplied. A Transmission Customer must purchase or provide both Spinning Reserve and Supplemental Reserve Service in order to cover 100% of the Transmission Customer's load for the first ten (10) minutes following a system contingency.

A.5.5 Notification Requirements

In the event of a system contingency that causes the interruption or curtailment of deliveries from a Transmission Customer's owned or purchased generating resource (i)

that is electrically within DEP's control area and/or (ii) for which the Transmission Customer has made arrangements with DEP to provide Spinning Reserve Service, the Transmission Customer must use best efforts to notify DEP within 10 minutes of the occurrence of the contingency or as soon as practicable thereafter.

A.5.6 Energy Accounting for Spinning Reserve Service

In the event of a system contingency for which DEP provides Spinning Reserve Service hereunder, any energy provided to the Transmission Customer without prior scheduling shall be treated as follows:

A.5.6.1 If the Transmission Customer has provided the required notification, contained in Section A.5.5, following the contingency,

A.5.6.1.1 Spinning reserve energy provided to the Transmission Customer during the initial 10-minute period will be offset or credited against Energy Imbalances so that the net Energy Imbalance accounts such that Energy Imbalance for that 10-minute period is zero, and

A.5.6.1.2 Spinning reserve energy provided to the Transmission Customer for periods longer than the initial 10-minute period will be handled as Energy Imbalance Service under Schedule 4 of this Tariff unless other arrangements exist between DEP and the Transmission Customer for backup service, or

A.5.6.2 If the Transmission Customer has not provided the required notification, contained in Section A.5.5, following a contingency, all energy provided by DEP will be handled as Energy Imbalance Service under Schedule 4 of this Tariff.

B. DEF Zone

B.5.1 Charges

The charges for Operating Reserve - Spinning Reserve Service shall be made at the applicable rate below per MW of Reserved Capacity for Point-To-Point Transmission Service or of the Transmission Customer's Network Load for the applicable month for Network Integration Transmission Service:

B.5.1.1 $58.52/MW month for service in an Annual Period or a Monthly Period.

B.5.1.2 $13.50/MW week for service in a Weekly Period.

B.5.1.3 $2.70/MW day for service in a Daily Period for on-peak days and $1.93/MW day for off-peak days; provided that the maximum charge in any Weekly Period shall be no greater than the product of the maximum service reserved in any Daily Period in that Weekly Period and the maximum charge for Weekly Period service.

B.5.1.4 $0.17/MW hour for service in an Hourly Period for on-peak hours and $0.08/MW hour for off-peak hours. The maximum charge in any Daily Period shall not exceed the product of the maximum service reserved in any Hourly Period in that Daily Period and the maximum charge for Daily Period service; and the maximum charge in any Weekly Period shall not exceed the product of the maximum service reserved in any Hourly Period in that Weekly Period and the maximum charge for Weekly Period service.

C. DEC Zone

C.5.1 The Point to Point Transmission Service Customer shall compensate the Transmission Provider each month for Operating Reserve - Spinning Reserve Service provided by the

Transmission Provider at the sum of the applicable charges set forth below:

C.5.1.1 For Monthly service, $.0815/kW of Reserved Capacity per month.

C.5.1.2 For Weekly service, $.019/kW of Reserved Capacity per week.

C.5.1.3 For service on on-peak days, $.004/kW of Reserved Capacity per on peak days.

C.5.1.4 For service on off-peak days, $.0027/kW of Reserved Capacity per off peak days.

C.5.1.5 For service on on-peak hours, $.00025/kW of Reserved Capacity per on peak hours.

C.5.1.6 For service on off-peak hours, $.00011/kW of Reserved Capacity per off peak hours.

The annual revenue requirements for purposes of Operating Reserve - Spinning Reserve Service for Network Integration Transmission Service shall be $16,361,940. The Network Integration Transmission Service Customer shall compensate the Transmission Provider each month for Operating Reserve - Spinning Reserve Service provided by the Transmission Provider at the sum of the Transmission Customer's monthly Load Ratio Share calculated on a rolling twelve month basis multiplied by one-twelfth of the annual revenue requirements of $16,361,940.

If, in the event of a system contingency, energy must be provided beyond a 10-minute period due to system or unit rampdown, such energy will be priced in accordance with the penalty provisions of Schedule 4, Energy Imbalance Service, unless other arrangements with the Transmission Provider are in place for backup service.

SCHEDULE 6

OPERATING RESERVE
SUPPLEMENTAL RESERVE SERVICE

Supplemental Reserve Service is needed to serve load in the event of a system contingency; however, it is not available immediately to serve load but rather within a short period of time. Supplemental Reserve Service may be provided by generating units that are on-line but unloaded, by quick-start generation or by interruptible load or other non-generation resources capable of providing this service. The Transmission Provider must offer this service when the transmission service is used to serve load within its Control Area. The Transmission Customer must either purchase this service from the Transmission Provider or make alternative comparable arrangements to satisfy its Supplemental Reserve Service obligation. The amount of and charges for Supplemental Reserve Service are set forth below. To the extent the Control Area operator performs this service for the Transmission Provider, charges to the Transmission Customer are to reflect only a pass-through of the costs charged to the Transmission Provider by that Control Area operator. If the Transmission Customer elects to provide this service itself or by contracting with a third party, the Transmission Customer or the third party provider shall meet the applicable NERC, SERC, and VACAR requirements for this service.

Charges:

The charge for Supplemental Reserve Service shall be based on the Zone in which the load is located. The applicable zonal charges are set out below.

A. DEP Zone

A.6.1 Supplemental Reserve Capacity

A Transmission Customer purchasing Supplemental Reserve Service will be required to purchase an amount of Customer Supplemental Reserve Capacity (CSUR) equal to 1.77 percent of the Transmission Customer's reserved capacity for Point-to-Point Transmission Service or 1.77 percent of the Network Integration Transmission Customer's maximum hourly network load responsibility during each service period (e.g., Daily Period or Weekly Period) for service periods less than one month or 1.77 percent of the Network Integration Transmission Customer's hourly network load coincident with the hour of the Transmission Provider's monthly transmission peak for Network Integration Transmission Customers subscribing to service periods of a month or longer. The billing determinants for this service shall be reduced by any portion of the 1.77 percent purchase obligation that a Transmission Customer obtains from third parties or supplies itself.

A.6.2 Supplemental Reserve Capacity Rate

The maximum rates for Supplemental Reserve Capacity Rate (SURR) shall be as follows for the service periods indicated:

A.6.2.1 For service provided for an Annual or Monthly Period, the rate shall not exceed $2,830 per MW-month.

A.6.2.2 For service provided for a Weekly Period, the rate shall not exceed $653.08 per MW-week.

A.6.2.3 For service provided for a Daily Period, the rate shall not exceed $130.62 per MW-day for on-peak days and $93.30 per MW-day for off-peak days.

A.6.3 Supplemental Reserve Capacity Charges

The Transmission Customer's Supplemental Reserve Capacity Charge for the Monthly Period is as follows:

SURC = CSUR X SURR

Where: SURC is the Transmission Customer's Supplemental Reserve Capacity Charge.

CSUR is the amount of Supplemental Reserve Capacity purchased by the Transmission Customer during the service period as determined in Section A.6.1.

SURR is the applicable Supplemental Reserve Capacity Rate.

A.6.3.1 The sum of the charges for Weekly Period service supplied during a Monthly Period shall not exceed the charges for the same amount of capacity purchased for a Monthly Period.

A.6.3.2 The sum of the charges for Daily Period service supplied during a Weekly Period shall not exceed the charges for the same amount of capacity purchased for a Weekly Period.

A.6.4 Availability and Application of Supplemental Reserve Capacity

Supplemental reserve capacity shall be available in an amount up to 50% of the Transmission Customer's capacity reservation for Point-to-Point service or up to the Network Integration Customer's peak network load for network service for the first ten (10) minutes immediately following an unplanned outage of a Transmission Customer's generation resource. If Supplemental Reserve Service is purchased from multiple suppliers or self-supplied by the Transmission Customer, the amount of supplemental reserve capacity provided by DEP shall be reduced by the amount of supplemental

reserve capacity purchased elsewhere or self-supplied. A Transmission Customer must purchase or provide both Spinning Reserve and Supplemental Reserve Service in order to cover 100% of the Transmission Customer's load for the first ten (10) minutes following a system contingency.

A.6.5 Notification Requirements

In the event of a system contingency that causes the interruption or curtailment of deliveries from a Transmission Customer's owned or purchased generating resource (i) that is electrically within DEP's control area and/or (ii) for which the Transmission Customer has made arrangements with DEP to provide Supplemental Reserve Service, the Transmission Customer must use best efforts to notify DEP within 10 minutes of the occurrence of the contingency or as soon as practicable thereafter.

A.6.6 Energy Accounting for Supplemental Reserve Service

In the event of a system contingency for which DEP provides Supplemental Reserve Service hereunder, any energy provided to the Transmission Customer without prior scheduling shall be treated as follows:

A.6.6.1 If the Transmission Customer has provided the required notification, contained in Section A.6.5, following the contingency,

A.6.6.1.1 Supplemental reserve energy provided to the Transmission Customer during the initial 10-minute period will be offset or credited against Energy Imbalances so that the net Energy Imbalance for that 10-minute period is zero, and

A.6.6.1.2 Supplemental reserve energy provided to the Transmission Customer for periods longer than the initial 10-minute period will

be handled as Energy Imbalance Service under Schedule 4 of this Tariff unless other arrangements exist between DEP and the Transmission Customer for backup service, or

A.6.6.2 If the Transmission Customer has not provided the required notification, contained in Section A.6.5, following a contingency, all energy provided by DEP will be handled as Energy Imbalance Service under Schedule 4 of this Tariff.

B. DEF Zone

B.6.1 Charges:

The charges for Operating Reserve - Supplemental Reserve Service shall be made at the applicable rate below per MW of Reserved Capacity for Point-To-Point Transmission Service or of the Transmission Customer's Network Load for the applicable month for Network Integration Transmission Service:

B.6.1.1 $179.80/MW month for service in an Annual Period or a Monthly Period.

B.6.1.2 $41.49/MW week for service in a Weekly Period.

B.6.1.3 $8.30/MW day for service in a Daily Period for on-peak days and $5.93/MW day for off-peak days; provided that the maximum charge in any Weekly Period shall be no greater than the product of the maximum service reserved in any Daily Period in that Weekly Period and the maximum charge for Weekly Period service.

B.6.1.4 $0.52/MW hour for service in an Hourly Period for on-peak hours and $0.25/MW hour for off-peak hours. The maximum charge in any Daily Period shall not exceed the product of the maximum service reserved in any

Hourly Period in that Daily Period and the maximum charge for Daily Period service; and the maximum charge in any Weekly Period shall not exceed the product of the maximum service reserved in any Hourly Period in that Weekly Period and the maximum charge for Weekly Period service.

C. DEC Zone

C.6.1 The Point to Point Transmission Service Customer shall compensate the Transmission Provider each month for Operating Reserve - Supplemental Reserve Service provided by the Transmission Provider at the sum of the applicable charges set forth below:

C.6.1.1 For Monthly service, $.0815/kW of Reserved Capacity per month.

C.6.1.2 For Weekly service, $.019/kW of Reserved Capacity per week.

C.6.1.3 For service on on-peak days, $.004/kW of Reserved Capacity per on peak days.

C.6.1.4 For service on off-peak days, $.0027/kW of Reserved Capacity per off peak days.

C.6.1.5 For service on on-peak hours, $.00025/kW of Reserved Capacity per on peak hours.

C.6.1.6 For service on off-peak hours, $.00011/kW of Reserved Capacity per off peak hours.

C.6.2 The annual revenue requirements for purposes of Operating Reserve - Supplemental Reserve Service for Network Integration Transmission Service shall be $16,361,940. The Network Integration Transmission Service Customer shall compensate the Transmission Provider each month for Operating Reserve - Supplemental Reserve Service provided by the Transmission Provider at the sum of the Transmission Customer's monthly Load

Ratio Share calculated on a rolling twelve month basis multiplied by one-twelfth of the annual revenue requirements of $16,361,940.

C.6.3 If, in the event of a system contingency, energy must be provided beyond a 10-minute period due to system or unit rampdown, such energy will be priced in accordance with the penalty provisions of Schedule 4, Energy Imbalance Service, unless other arrangements with the Transmission Provider are in place for backup service.

SCHEDULE 7

LONG-TERM FIRM AND SHORT-TERM FIRM POINT-TO-POINT TRANSMISSION SERVICE

The Transmission Customer shall compensate the Transmission Provider each month for Reserved Capacity at the sum of the applicable charges for a zone set forth below:

Charges:

The charges for Long-Term Firm and Short-Term Firm Point-To-Point Transmission Service shall be based on the Zone in which the energy being transmitted is consumed or, if the energy is transmitted to an interface with another transmission provider, the Zone in which transmission service is last provided by the Transmission Provider, except in the case of energy being transmitted to serve Network Load under Part III of this Tariff in which case the applicable charge will be under Section 34 of the Tariff.

The applicable zonal charges are set out below.

A. DEP Zone

A.7.1 Annual, Monthly, Weekly and Daily Periods: The rates for the Annual Period, the Monthly Period, the Daily Period for on-peak days and the Daily Period for off-peak days are derived from the Formula Rate, which is set forth in OATT Attachment H.1. The Formula Rate is implemented in accordance with the OATT Attachment H.2 Formula Rate Implementation Protocols.

A.7.2 Daily Period: The total demand charge in any Weekly Period, pursuant to a reservation for Daily Period delivery, shall not exceed the Weekly Period rate times the highest amount in kilowatts of Reserved Capacity in any Daily Period during such Weekly Period.

A.7.3 Annual Update: The rates for Schedule 7 shall be updated annually on June 1st of each year in accordance with the OATT Attachment H.2 Formula Rate Implementation Protocols.

A.7.4 Discounts: Three principal requirements apply to discounts for transmission service as follows: (1) any offer of a discount made by the Transmission Provider must be announced to all Eligible Customers solely by posting on the OASIS, (2) any customer-initiated requests for discounts (including requests for use by one's wholesale merchant or an Affiliate's use) must occur solely by posting on the OASIS, and (3) once a discount is negotiated, details must be immediately posted on the OASIS. For any discount agreed upon for service on a path from point(s) of receipt to point(s) of delivery, the Transmission Provider must offer the same discount transmission service rate for the same time period to all Eligible Customers on all unconstrained transmission paths that go to the same point(s) of delivery on the Transmission System.

A.7.5 Unauthorized Use: In the event that the Transmission Customer's use of the Transmission System during any hour of that day exceeds the amount of the Transmission Customer's Reserved Capacity, the Transmission Customer shall pay the Transmission Provider a penalty charge based on a rate equal to 200% of the applicable rate for Firm Point-to-Point Transmission Service. For unreserved use within a single day, the penalty charge shall be based on the daily rate. For unreserved use in two or more days within a calendar week, the penalty charge shall be based on the weekly rate. For multiple instances of unreserved use in more than one calendar week in a calendar month, the penalty charge shall be based on the monthly rate. Losses delivered to the

DEP Zone by the Transmission Customer will not be included in the Transmission Customer's usage for determination of the charge set out herein.

A.7.6 Credits for Unreserved Use Penalty Revenues: The Transmission Provider shall credit revenues that are collected for unreserved use to all non-offending Transmission Customers (including Affiliated Transmission Customers) and to the Transmission Provider on behalf of its own customers (Native Load Customers). The credits shall be calculated and allocated as set forth below.

The penalty revenues collected pursuant to Section A.7.6 of this schedule shall be credited based on the ratio of the transmission revenues collected from each Network Transmission Customer or Point-to-Point Transmission Customer that did not experience unreserved use in an hour to the sum of the transmission revenues collected from all Transmission Customers that did not experience unreserved use in the hour. A Transmission Customer that experiences unreserved use in an hour shall not receive a credit for that hour.

The Transmission Provider shall disburse accumulated penalty revenues, plus interest calculated in accord with 18 C.F.R. § 35.19a, when the accumulated amount of penalty revenues collected under Section A.7.6 of this schedule and Section A.8.6 of Schedule 8 reaches $50,000. However, if a distribution has not been made within the previous 12 month period, a distribution will be made no later than April 1 of that calendar year.

A.7.7 Additional Charges: The Transmission Customer will compensate DEP for any facility additions or redispatch costs in accordance with Sections 13.5, 27 and 45.2 of the Tariff.

A.7.8 Losses: For purposes of billing, the Reserved Capacity to be applied under Sections A.7.1 through A.7.4 of this schedule shall not include losses purchased or provided by the Transmission Customer.

A.7.9 Resales: The rates and rules governing charges and discounts stated above shall not apply to resales of transmission service, compensation for which shall be governed by Section 23.1 of the Tariff.

B. DEF Zone

B.7.1 Monthly, Weekly and Daily Periods: The rates for the Monthly Period, the Weekly Period and the Daily Period for on-peak days and the Daily Period for off-peak days are derived from the Formula Rate, which is set forth in OATT Schedules 10-A.2 and 10-A.3. The resulting rates are posted on the Transmission Provider's OASIS. The Formula Rate is implemented in accordance with the OATT Schedule 10-A.1 Formula Rate Implementation Protocols.

B.7.2 Daily Period: The total demand charge in any Weekly Period, pursuant to a reservation for Daily Period delivery, shall not exceed the Weekly Period rate times the highest amount in kilowatts of Reserved Capacity in any Daily Period during such Weekly Period.

NOTE: All quantities used in calculating the Transmission Customer's Reserved Capacity shall be established at the transmission system input level, i.e., shall include the transmission capacity amount associated with any losses.

B.7.3 Annual Update: The rates for Schedule 7 shall be updated annually on June 1st of each year in accordance with the OATT Schedule 10-A.1 Formula Rate Implementation Protocols.

B.7.4 Discounts: Three principal requirements apply to discounts for transmission service as follows: (1) any offer of a discount made by the Transmission Provider must be announced to all Eligible Customers solely by posting on the OASIS, (2) any customer-initiated requests for discounts (including requests for use by one's wholesale merchant or an Affiliate's use) must occur solely by posting on the OASIS, and (3) once a discount is negotiated, details must be immediately posted on the OASIS. For any discount agreed upon for service on a path from point(s) of receipt to point(s) of delivery, the Transmission Provider must offer the same discount transmission service rate for the same time period to all Eligible Customers on all unconstrained transmission paths that go to the same point(s) of delivery on the Transmission System.

B.7.5 Unauthorized Use: In the event a Transmission Customer's use of the Transmission System during any hour of that day exceeds the amount of the Transmission Customer's Reserved Capacity, the Transmission Customer shall pay the Transmission Provider a penalty charge based on a rate equal to 200% of the applicable rate for Firm Point-to-Point Transmission Service. For unreserved use within a single day, the penalty charge shall be based on the daily rate. For unreserved use in two or more days within a calendar week, the penalty charge shall be based on the weekly rate. For multiple instances of unreserved use in more than one calendar week in a calendar month, the penalty charge shall be based on the monthly rate.

B.7.6 Credits for Unreserved Use Penalty Revenues: The Transmission Provider shall credit revenues that are collected for unreserved use to all non-offending Transmission Customers (including Affiliated Transmission Customers) and to the Transmission

Provider on behalf of its own customers (Native Load Customers). The credits shall be calculated and allocated as set forth below.

The penalty revenues collected pursuant to Section B.7.5 of this schedule shall be credited based on the ratio of the transmission revenues collected from each Network Transmission Customer or Point-to-Point Transmission Customer that did not experience unreserved use in an hour to the sum of the transmission revenues collected from all Transmission Customers that did not experience unreserved use in the hour. A Transmission Customer that experiences unreserved use in an hour shall not receive a credit for that hour.

The Transmission Provider shall disburse accumulated penalty revenues, plus interest calculated in accord with 18 C.F.R. § 35.19a, when the accumulated amount of penalty revenues collected under Section B.7.5 of this schedule and Section B.8.6 of Schedule 8 reaches $50,000. However, if a distribution has not been made within the previous 12 month period, a distribution will be made no later than April 1 of that calendar year.

B.7.7 Regulatory Assessment: The portion of the charge by FERC pursuant to 18 C.F.R. § 382.201 related to service under this Tariff. The Regulatory Assessment shall be allocated to the Transmission Customer on an annual basis in the year following the year in which transmission service is rendered, based on the megawatt-hours of service provided to the Transmission Customer or based upon such other method as these fees are assessed by FERC.

B.7.8 Resales: The rates and rules governing charges and discounts stated above shall not apply to resales of transmission service, compensation for which shall be governed by Section 23.1 of the Tariff.

C. DEC Zone

The Transmission Customer shall compensate the Transmission Provider each month for Reserved Capacity at the sum of the applicable charges set forth below:

C.7.1 Yearly delivery: one-twelfth of the Annual Demand Charge determined pursuant to Exhibit A to this Schedule, multiplied by the amount of Reserved Capacity per year.

C.7.2 Monthly delivery: the Monthly Demand Charge determined pursuant to Exhibit A to this Schedule, multiplied by the amount of Reserved Capacity per month.

C.7.3 Weekly delivery: the Weekly Demand Charge determined pursuant to Exhibit A to this Schedule, multiplied by the amount of Reserved Capacity per week.

C.7.4 Daily on-peak delivery: the Daily On-Peak Demand Charge determined pursuant to Exhibit A to this Schedule, multiplied by the amount of Reserved Capacity per on-peak days.

C.7.5 Daily off-peak delivery: the Daily Off-Peak Demand Charge determined pursuant to Exhibit A to this Schedule, multiplied by the amount of Reserved Capacity per off-peak days. The total demand charge in any week, pursuant to a reservation for Daily delivery, shall not exceed the rate specified in section (3) above times the highest amount in kilowatts of Reserved Capacity in any day during such week.

C.7.6 Discounts: Three principal requirements apply to discounts for transmission service as follows (1) any offer of a discount made by the Transmission Provider must be announced to all Eligible Customers solely by posting on the OASIS, (2) any customer-

initiated requests for discounts (including requests for use by one's wholesale merchant or an Affiliate's use) must occur solely by posting on the OASIS, and (3) once a discount is negotiated, details must be immediately posted on the OASIS. For any discount agreed upon for service on a path, from point(s)of receipt to point(s) of delivery, the Transmission Provider must offer the same discounted transmission service rate for the same time period to all Eligible Customers on all unconstrained transmission paths that go to the same point(s) of delivery on the Transmission System.

C.7.7 **Resales:** The rates and rules governing charges and discounts stated above shall not apply to resales of transmission service, compensation for which shall be governed by Section 23.1 of the Tariff.

C.7.8 In the event that the Transmission Customer exceeds its firm Reserved Capacity at any Point of Receipt and/or Point of Delivery (or any combination of such points, together with any Secondary Points of Receipt and Delivery pursuant to Section 22.1), the Transmission Customer shall pay two times the charge under Schedule 7 for the maximum amount during the relevant time period that the Transmission Customer exceeds its firm Reserved Capacity at any Point of Receipt and/or Point of Delivery. The unreserved use penalty for one hour of unreserved use within the same day will be based on the rate for daily firm point-to-point service. If the Transmission Customer incurs more than one assessment for a given duration the penalty period will be increased to the next longest duration. Pursuant to Section 3, Ancillary Services charges will be based on the amount of transmission service used but not reserved for each hour of unreserved use.

Exhibit A to Schedule 7

Long-Term Firm and Short-Term Firm Point-to-Point Transmission Service Rates in the DEC Zone

1. The Annual Demand Charge for a calendar year is equal to A / B, where:

   - A = the Transmission Revenue Requirement for the calendar year as determined in Schedule 10-B, Exhibit B.

   - B = the average of the Transmission Provider's twelve Monthly Transmission System Peaks (expressed in kilowatts) for the calendar year as defined in Section 34.3 of the Tariff.

2. The Monthly Demand Charge is equal to the Annual Demand Charge divided by twelve (12).

3. The Weekly Demand Charge is equal to the Annual Demand Charge divided by fifty-two (52).

4. The Daily On-Peak Demand Charge is equal to the Weekly Demand Charge divided by five (5).

5. The Daily Off-Peak Demand Charge is equal to the Weekly Demand Charge divided by seven (7).

SCHEDULE 8

NON-FIRM POINT-TO-POINT TRANSMISSION SERVICE

The Transmission Customer shall compensate the Transmission Provider for Non-Firm Point-To-Point Transmission Service up to the sum of the applicable charges set forth below:

Charges:

The charge for Non-Firm Point-To-Point Transmission Service shall be based on the Zone in which the energy being transmitted is consumed or, if the energy is transmitted to an interface with another transmission provider, the Zone in which transmission service is last provided by the Transmission Provider, except in the case of energy being transmitted to serve Network Load under Part III of this Tariff in which case the applicable charge will be under Section 34 of the Tariff.

The applicable zonal charges are set out below.

A. DEP Zone

A.8.1 Monthly, Weekly, Daily and Hourly Periods: The rates for the Annual Period, the Monthly Period, the Daily Period for on-peak days and the Daily Period for off-peak days, the Hourly Period for on-peak hours and the Hourly Period for off-peak hours are derived from the Formula Rate, which is set forth in OATT Attachment H.1 and Attachment H.2 Formula Rate Implementation Protocols.

A.8.2 Daily Period: The total demand charge in any Weekly Period, pursuant to a reservation for Daily Period delivery, shall not exceed the Weekly rate times the highest amount in kilowatts of Reserved Capacity in any Daily Period during such Weekly Period.

A.8.3 Hourly Period: The total demand charge in any Daily Period, pursuant to a reservation for Hourly Period delivery, shall not exceed the Daily Period rate times the highest

amount in kilowatts of Reserved Capacity in any Hourly Period during such Daily Period. In addition, the total demand charge in any Weekly Period, pursuant to a reservation for Hourly Period or Daily Period delivery, shall not exceed the Weekly Period rate times the highest amount in kilowatts of Reserved Capacity in any Hourly Period during such Weekly Period.

A.8.4 Annual Update: The rates for Schedule 8 shall be updated annually on June 1st of each year in accordance with the OATT Attachment H.2 Formula Rate Implementation Protocols.

A.8.5 Discounts: Three principal requirements apply to discounts for transmission service as follows: (1) any offer of a discount made by the Transmission Provider must be announced to all Eligible Customers solely by posting on the OASIS, (2) any customer-initiated requests for discounts (including requests for use by one's wholesale merchant or an Affiliate's use) must occur solely by posting on the OASIS, and (3) once a discount is negotiated, details must be immediately posted on the OASIS. For any discount, agreed upon for service on a path, from point(s) of receipt to point(s) of delivery, the Transmission Provider must offer the same discount transmission service rate for the same time period to all Eligible Customers on all unconstrained transmission paths that go to the same point(s) of delivery on the Transmission System.

A.8.6 Unauthorized Use: In the event that the Transmission Customer's use of the Transmission System during any hour of that day exceeds the amount of the Transmission Customer's Reserved Capacity, the Transmission Customer shall pay the Transmission Provider a penalty charge based on a rate equal to 200% of the applicable rate for Firm Point-to-Point Transmission Service. For unreserved use within a single

day, the penalty charge shall be based on the daily Firm Point-to-Point Transmission Service rate. For unreserved use in two or more days within a calendar week, the penalty charge shall be based on the weekly Firm Point-to-Point Transmission Service rate. For multiple instances of unreserved use in more than one calendar week in a calendar month, the penalty charge shall be based on the monthly Firm Point-to-Point Transmission Service rate.

Losses delivered to the DEP Zone by the Transmission Customer will not be included in the Transmission Customer's usage for determination of the charge set out herein.

A.8.7 Credits for Unreserved Use Penalty Revenues: The Transmission Provider shall credit revenues that are collected for unreserved use to all non-offending Transmission Customers (including Affiliated Transmission Customers) and to the Transmission Provider on behalf of its own customers (Native Load Customers). The credits shall be calculated and allocated as set forth below.

The penalty revenues collected pursuant to Section A.8.6 of this schedule shall be credited based on the ratio of the transmission revenues collected from each Network Transmission Customer or Point-to-Point Transmission Customer that did not experience unreserved use in an hour to the sum of the transmission revenues collected from all Transmission Customers that did not experience unreserved use in the hour. A Transmission Customer that experiences unreserved use in an hour shall not receive a credit for that hour.

The Transmission Provider shall disburse accumulated penalty revenues, plus interest calculated in accord with 18 C.F.R. § 35.19a, when the accumulated amount of penalty revenues collected under Section A.8.6 of this schedule and Section A.7.6 of

Schedule 7 reaches $50,000. However, if a distribution has not been made within the previous 12 month period, a distribution will be made no later than April 1 of that calendar year.

A.8.8 Additional Charges: The Transmission Customer will compensate DEP for any facility additions or redispatch costs in accordance with Sections 13.5, 27 and 45.2 of the Tariff.

A.8.9 Losses: For purposes of billing, the Reserved Capacity to be applied under Sections A.8.1 through A.8.4 of this schedule shall not include losses purchased or provided by the Transmission Customer.

A.8.10 Resales: The rates and rules governing charges and discounts stated above shall not apply to resales of transmission service, compensation for which shall be governed by Section 23.1 of the Tariff.

B. DEF Zone

B.8.1 Monthly, Weekly, Daily and Hourly Periods: The rates for the Monthly Period, the Weekly Period, the Daily Period for on-peak days, the Daily Period for off-peak days, the Hourly Period for on-peak hours and the Hourly Period for off-peak hours are derived from the Formula Rate, which is set forth in OATT Schedules 10-A.2 and 10-A.3. The resulting rates are posted on the Transmission Provider's OASIS. The Formula Rate is implemented in accordance with the OATT Schedule 10-A.1 Formula Rate Implementation Protocols.

B.8.2 Daily Period: The total demand charge in any Weekly Period, pursuant to a reservation for Daily Period delivery, shall not exceed the Weekly Period rate times the highest amount in kilowatts of Reserved Capacity in any Daily Period during such Weekly Period.

B.8.3 Hourly Period: The total demand charge in any Daily Period, pursuant to a reservation for Hourly Period delivery, shall not exceed the Daily Period rate times the highest amount in kilowatts of Reserved Capacity in any Hourly Period during such Daily Period. In addition, the total demand charge in any Weekly Period, pursuant to a reservation for Hourly Period or Daily Period delivery, shall not exceed the Weekly Period rate times the highest amount in kilowatts of Reserved Capacity in any Hourly Period during such Weekly Period.

NOTE: All quantities used in calculating the Transmission Customer's Reserved Capacity shall be established at the transmission system input level, i.e., shall include the transmission capacity amount associated with any losses.

B.8.4 Annual Update: The rates for Schedule 8 shall be updated annually on June 1st of each year in accordance with the OATT Schedule 10-A.1 Formula Rate Implementation Protocols.

B.8.5 Discounts: Three principal requirements apply to discounts for transmission service as follows: (1) any offer of a discount made by the Transmission Provider must be announced to all Eligible Customers solely by posting on the OASIS, (2) any customer-initiated requests for discounts (including requests for use by one's wholesale merchant or an Affiliate's use) must occur solely by posting on the OASIS, and (3) once a discount is negotiated, details must be immediately posted on the OASIS. For any discount agreed upon for service on a path, from point(s) of receipt to point(s) of delivery, the Transmission Provider must offer the same discounted transmission service rate for the same time period to all Eligible Customers on all unconstrained transmission paths that go to the same point(s) of delivery on the Transmission System.

B.8.6 Unauthorized Use: In the event a Transmission Customer's use of the Transmission System exceeds the amount of the Transmission Customer's Reserved Capacity, the Transmission Customer shall pay the Transmission Provider a penalty charge based on a rate equal to 200% of the applicable rate for Firm Point-to-Point Transmission Service. For unreserved use within a single day, the penalty charge shall be based on the daily Firm Point-to-Point Transmission Service rate. For unreserved use in two or more days within a calendar week, the penalty charge shall be based on the weekly Firm Point-to-Point Transmission Service rate. For multiple instances of unreserved use in more than one calendar week in a calendar month, the penalty charge shall be based on the monthly Firm Point-to-Point Transmission Service rate.

B.8.7 Credits for Unreserved Use Penalty Revenues: The Transmission Provider shall credit revenues that are collected for unreserved use to all non-offending Transmission Customers (including Affiliated Transmission Customers) and to the Transmission Provider on behalf of its own customers (Native Load Customers). The credits shall be calculated and allocated as set forth below.

The penalty revenues collected pursuant to Section B.8.6 of this schedule shall be credited based on the ratio of the transmission revenues collected from each Network Transmission Customer or Point-to-Point Transmission Customer that did not experience unreserved use in an hour to the sum of the transmission revenues collected from all Transmission Customers that did not experience unreserved use in the hour. A Transmission Customer that experiences unreserved use in an hour shall not receive a credit for that hour.

The Transmission Provider shall disburse accumulated penalty revenues, plus interest calculated in accord with 18 C.F.R. § 35.19a, when the accumulated amount of penalty revenues collected under Section B.8.6 of this schedule and Section B.7.5 of Schedule 7 reaches $50,000. However, if a distribution has not been made within the previous 12 month period, a distribution will be made no later than April 1 of that calendar year.

B.8.8 Regulatory Assessment: The Transmission Customer shall pay a portion of the charge by FERC pursuant to 18 C.F.R. § 382.201 related to service under this Tariff. The Regulatory Assessment shall be allocated to the Transmission Customer on an annual basis in the year following the year in which transmission service is rendered, based on the megawatt-hours of service provided to the Transmission Customer or based upon such other method as these fees are assessed by FERC.

B.8.9 Resales: The rates and rules governing charges and discounts stated above shall not apply to resales of transmission service, compensation for which shall be governed by Section 23.1 of the Tariff.

C. DEC Zone

The Transmission Customer shall compensate the Transmission Provider for Non-Firm Point-To-Point Transmission Service up to the sum of the applicable charges set forth below:

C.8.1 Monthly delivery: the Monthly Demand Charge determined pursuant to Exhibit A to this Schedule, multiplied by the amount of Reserved Capacity per month.

C.8.2 Weekly delivery: the Weekly Demand Charge determined pursuant to Exhibit A to this Schedule, multiplied by the amount of Reserved Capacity per week.

C.8.3 Daily on-peak delivery: the Daily On-Peak Demand Charge determined pursuant to Exhibit A to this Schedule, multiplied by the amount of Reserved Capacity per on-peak days.

C.8.4 Daily off-peak delivery: the Daily Off-Peak Demand Charge determined pursuant to Exhibit A to this Schedule, multiplied by the amount of Reserved Capacity per off-peak days. The total demand charge in any week, pursuant to a reservation for Daily delivery, shall not exceed the rate specified in section (2) above times the highest amount in kilowatts of Reserved Capacity in any day during such week.

C.8.5 Hourly delivery: The basic charge shall be that agreed upon by the Parties at the time this service is reserved. For service during On-Peak hours, in no event shall the charge exceed the Hourly On-Peak Demand charge determined pursuant to Exhibit A to this Schedule, multiplied by the amount of Reserved Capacity per on peak hours. For service during Off-Peak hours, in no event shall the charge exceed the Hourly Off-Peak Demand charge determined pursuant to Exhibit A to this Schedule, multiplied by the amount of Reserved Capacity per off-peak hours. The total demand charge in any day, pursuant to a reservation for Hourly delivery, shall not exceed the rate specified in section (3) above times the highest amount in kilowatts of Reserved Capacity in any hour during such day. In addition, the total demand charge in any week, pursuant to a reservation for Hourly or Daily delivery, shall not exceed the rate specified in section (2) above times the highest amount in kilowatts of Reserved Capacity in any hour during such week.

C.8.6 Discounts: Three principal requirements apply to discounts for transmission service as follows (1) any offer of a discount made by the Transmission Provider must be announced to all Eligible Customers solely by posting on the OASIS, (2) any customer-

initiated requests for discounts (including requests for use by one's wholesale merchant or an Affiliate's use) must occur solely by posting on the OASIS, and (3) once a discount is negotiated, details must be immediately posted on the OASIS. For any discount agreed upon for service on a path, from point(s) of receipt to point(s) of delivery, the Transmission Provider must offer the same discounted transmission service rate for the same time period to all Eligible Customers on all unconstrained transmission paths that go to the same point(s) of delivery on the Transmission System.

C.8.7 Resales: The rates and rules governing charges and discounts stated above shall not apply to resales of transmission service, compensation for which shall be governed by Section 23.1 of the Tariff.

C.8.8 Billing Credits for Interrupted Non-Firm Point-to-Point Service: Billing relief is provided to Non-Firm Point-to-Point Transmission Customers whose reservations are displaced by higher priority reservations. In these instances, the Transmission Customer's bill (including required Ancillary Services) shall be determined by the percentage of the reservation that was served.

C.8.9 In the event that the Transmission Customer exceeds its non-firm Reserved Capacity at any Point of Receipt and/or Point of Delivery, the Transmission Customer shall pay, for the contract period (i.e., monthly, weekly, daily, or hourly) for which the Transmission Customer reserves capacity, the charge under Schedule 8 (subject to applicable caps) for the maximum amount that the Transmission Customer exceeds its non-firm Reserved Capacity at any Point of Receipt and/or Point of Delivery. Non-Firm Point-To-Point Transmission Service shall include transmission of energy on an hourly basis and

transmission of scheduled short-term capacity and energy on a daily, weekly or monthly basis, but not to exceed one month's reservation for any one Application, under Schedule 8.

Exhibit A to Schedule 8

Non-Firm Point-to-Point Transmission Service Rates for the DEC Zone

1. The Monthly Demand Charge during any month of a calendar year is equal to A / B, where:

   - A = the Annual Transmission Revenue Requirement for the calendar year as determined in Schedule 10-B, Exhibit B.

   - B = the total of the Transmission Provider's twelve Monthly Transmission System Peaks (expressed in kilowatts) for the calendar year as defined in Section 34.3 of the Tariff.

2. The Weekly Demand Charge is equal to the Monthly Demand Charge multiplied by twelve (12) and divided by fifty-two (52).

3. The Daily On-Peak Demand Charge is equal to the Weekly Demand Charge divided by five (5).

4. The Daily Off-Peak Demand Charge is equal to the Weekly Demand Charge divided by seven (7).

5. The Hourly On-Peak Demand Charge is equal to the Daily On-Peak Demand Charge divided by sixteen (16).

6. The Hourly Off-Peak Demand Charge is equal to the Daily Off-Peak Demand Charge divided by twenty-four (24).

SCHEDULE 9

LOSS COMPENSATION SERVICE

[DEC, DEP AND DEF Zones]

Capacity and energy losses occur when a Transmission Provider delivers electricity across its transmission facilities for a Transmission Customer. A Transmission Customer may elect to (1) supply the capacity and/or energy necessary to compensate the Transmission Provider for such losses, (2) receive an amount of electricity at delivery points that is reduced by the amount of losses incurred by the Transmission Provider, or (3) with the concurrence of the Transmission Provider, have the Transmission Provider supply the capacity and/or energy necessary to compensate for such losses.

For services provided by DEC on and after June 1, 2019, the Real Power Loss factor used to determine the amount of losses associated with the use of facilities shall be calculated effective as of June 1, 2019 and thereafter on an annual basis in accordance with the methodology for doing so set forth in Attachment W and in accordance with Section 2(j) of Exhibit A to Schedule 10-B, Formula Rate Implementation Protocols. For Services provided by DEP, the Real Power Loss factor used to determine the amount of losses associated with the use of facilities shall be calculated on an annual basis in accordance with the methodology for doing so set forth in Attachment W and in accordance with Section 1.l of Attachment H.2. For services provided by DEF, the Real Power Loss factor in the DEF Zone used to determine the amount of losses associated with the use of facilities shall be calculated as defined in Section 15.7 for the DEF Zone.

The Transmission Provider will determine such losses by multiplying the sum of hourly energy scheduled to be delivered to the Transmission Customer's Points of Delivery by the

applicable Real Power Loss factor. Determination of losses to be supplied by the Transmission Customer by coincident schedules will be done on a daily basis for each schedule. If the Transmission Provider and Transmission Customer agree to have the Transmission Provider compensate for losses under option 3 above, the Transmission Customer shall be charged for Loss Compensation Service at a rate not to exceed 100 percent of the Transmission Provider's incremental cost to produce energy after serving all other obligations (including economy and opportunity transactions) and a Generation Capacity Loss Adder of $.006 per kWh.

SCHEDULE 10-A

NETWORK INTEGRATION TRANSMISSION SERVICE

[DEF Zone]

The Transmission Customer shall compensate the Transmission Provider each month for its Network Load for the applicable month as follows:

10.1 Monthly delivery: The charge for Network Integration Transmission Service is derived from the Formula Rate, which is set forth in OATT Schedules 10-A.2 and 10-A.3. The resulting rate is posted on the Transmission Provider's OASIS. The Formula Rate is implemented in accordance with the OATT Schedule 10-A.1 Formula Rate Implementation Protocols. The charge for Network Integration Transmission Service shall be updated annually on June 1st of each year in accordance with the OATT Schedule 10-A.1 Formula Rate Implementation Protocols.

NOTE: All quantities used in calculating the Network Integration Customer's Network Load shall be adjusted to the transmission system input level, i.e., shall include the transmission capacity amount associated with any applicable losses.

10.2 Regulatory Assessment: The Transmission Customer shall pay a portion of the charge by FERC pursuant to 18 C.F.R. § 382.201 related to service under this Tariff. The Regulatory Assessment shall be allocated to the Transmission Customer on an annual basis in the year following the year in which transmission service is rendered, based on the megawatt-hours of service provided to the Transmission Customer or based upon such other method as these fees are assessed by FERC.

SCHEDULE 10-A.1

Formula Rate Implementation Protocols

[DEF Zone]

Section 1 **The Annual Update Process**

a. The unit charges for transmission service under Schedules 7, 8, 10-A and 12 of the Tariff shall be determined and updated annually through the application of the Formula Rate comprising Schedules 10-A.2 and 10-A.3 of the Tariff in the following manner:

(i) Subject to Sections 1.a(iii) and 4 below, the initial unit charges for transmission service shall apply to service provided during the period January 1, 2008 through May 31, 2008 (inclusive), which unit charges reflect the Transmission Provider's actual costs and demands for calendar year 2006. The unit charges for transmission service shall be changed annually beginning June 1, 2008, in accordance with the process set forth in the following Sections 1.a(ii) and 1.a(iii).

(ii) Beginning in 2008 and continuing each year thereafter, on or before May 15 of each year, DEF shall calculate unit charges for transmission service reflecting its actual costs and demands for the prior calendar year. Such calculation ("Annual Update") shall be made in accordance with the Formula Rate comprising Schedules 10-A.2 and 10-A.3. The transmission unit charges determined in the Annual Update shall be placed into effect beginning on June 1 of the year in which the Annual Update is performed (i.e., beginning June 1 of the year following the calendar year upon which

the Annual Update is based). Such transmission unit charges shall continue in effect through May 31 of the following year, unless changed as provided in Section 4. (To put this in a calendar-year context, for any given calendar year, the amounts billed for transmission service provided during the period of January 1 through May 31 of that calendar year shall be computed using the unit charges determined in the Annual Update performed in the prior calendar (reflecting actual costs and demands for the second preceding calendar year), except as such unit charges may be changed as provided in Section 4, and such billed amounts for transmission service provided during the period of June 1 through December 31 of that calendar year shall be computed using the unit charges determined in the Annual Update performed in that calendar year (reflecting actual costs and demands for the preceding calendar year), except as such unit charges may be changed as provided in Section 4.)

(iii) At the time of, and in conjunction with, each Annual Update (beginning in calendar year 2009), amounts billed to all Transmission Customers for Network Integration Transmission Service and Long-Term Firm Point-to-Point Transmission Service (i.e., but not for Short-Term Firm Point-to-Point Transmission Service or Non-Firm Point-to-Point Transmission Service) provided during the calendar year upon which the Annual Update is based (i.e., the calendar year preceding the year in which the Annual Update is performed) shall be "trued up" as follows: (1) The monthly amounts billed to each Transmission Customer for Network Integration

Transmission Service and Long-Term Point-to-Point Transmission Service for service provided during all twelve months of such prior calendar year (i.e., the year being trued-up) shall be recomputed using the transmission unit charges reflecting actual costs and demands, as determined in the Annual Update. (2) The resulting recomputed monthly amounts to each such Transmission Customer shall be compared to the amounts that had been included in that Transmission Customer's monthly billings for service during that calendar year (which shall have been determined using the transmission unit charges that shall have been in effect pursuant to Sections 1.a(i) and 1.a(ii) above). (3) The difference between the recomputed amounts and the previously billed amounts, together with interest determined in accordance with 18 C.F.R. § 35.19, shall, as appropriate, be refunded to the Transmission Customer within 30 days, or charged to the Transmission Customer on the next monthly bill to that Transmission Customer, following the Publication Date (as hereinafter defined) of the Annual Update.

(iv) In the event that the Formula Rate shall have changed one or more times during a calendar year, the Annual True-Up for that year shall have multiple parts, one part for each period in which a different Formula Rate was in effect. Each part shall accomplish the true-up of charges for the portion of the year during which the respective Formula Rate was in effect. For purposes of such true-up, (1) the annual revenue requirements for the entire year shall be determined as if the respective Formula Rate

was in effect for the entire year, (2) the resulting per-unit rates shall be determined from those revenue requirements and billing determinants for the entire year in accordance with the respective Formula Rate, and (3) the resulting unit prices shall be applied to Transmission Customers' billing determinants for the same portion of the year during which the respective Formula Rate was in effect in order to determine the trued-up charges for that time period (i.e., what the charges reflecting actual costs should have been for such time period). Each set of trued-up charges shall be compared to the actual monthly charges for respective Customers during the corresponding time periods to determine refunds or additional charges, along with appropriate interest determined in accordance with the Formula Rate.

b. Promptly after preparing each Annual Update, but in no event later than May 15 of the year in which the Annual Update is performed (except as provided in Section 1.c below), the Transmission Provider shall:

(i) post the results of such Annual Update on Transmission Provider's Internet website via link to the Transmission Services page or a similar successor page in both a Portable Document Format and fully-functioning Excel file; and

(ii) file the results of such Annual Update with the Federal Energy Regulatory Commission ("FERC" or "Commission") as an informational filing ("Informational Filing"). Consistent with FERC procedures concerning informational filings, the Informational Filing will not be noticed for filing

and FERC need not issue an acceptance or approval of the Informational Filing for the rates to go into effect. If the Commission issues a Notice in response to the Informational Filings, the Parties shall advise the Commission of the challenge process in the Formula Rate Implementation Protocols ("Protocols") and shall seek an abeyance of the Commission proceeding to permit that challenge process to proceed.

c. If the May 15 deadline set forth above for making the Annual Update posting/filing should fall on a weekend or a holiday recognized by the FERC, then the posting/filing shall be due on the next business day.

d. Subject to Section 4.e, the date that is the later of (i) the last of the events listed in Sections 1.b and 1.c, above, or (ii) the date of the actual posting of the Transmission Provider's Annual Update shall be the "Publication Date" of that Annual Update.

e. The Formula Rate is premised upon the following predicates:

(i) the FERC's Uniform System of Accounts ("USoA"),

(ii) FERC Form No. 1[1] reporting requirements as applicable,

(iii) FERC's orders establishing generally applicable transmission ratemaking policies (including, but not limited to, FERC's policy that all charges billed under formula rates are subject to prudence challenges and after-the-fact refund)[2] and

[1] If the referenced form is superseded, the successor form(s) shall be utilized and supplemented as necessary to provide equivalent information as that provided in the superseded form. If the referenced form(s) is (are) discontinued, equivalent information as that provided in the discontinued form(s) shall be utilized.

(iv) the Transmission Provider's accounting policies, practices and procedures that are consistent with Section 1.e(i) above, as each of such predicates ("Fundamental Predicates") exists as of the date of the initial filing by the Transmission Provider of the Formula Rate, subject to such Fundamental Predicate(s) being changed in accordance with the procedures provided for in this Schedule 10-A.1 or by the FERC.

f. The Annual Update and the Transmission Provider's associated Informational Filing:

(i) shall be based upon the data properly recordable and recorded in (a) the Transmission Provider's FERC Form No. 1 report (to the extent the Formula Rate specifies Form 1 data as the input source) and (b) the books and records of the Transmission Provider maintained in accordance with the USoA (as defined above) and other FERC accounting policies (to the extent the Formula Rate specifies such data as the input source);

(ii) shall, as and to the extent specified in the Formula Rate, provide supporting documentation for data not otherwise available in the FERC Form No. 1 that are used in the Formula Rate;

(iii) shall provide notice of material changes in the Transmission Provider's accounting policies, practices and procedures from those in effect for the calendar year upon which the immediately preceding Annual Update was based ("Material Accounting Changes");[3]

---

[2] Challenges to prudency of costs shall apply the then-existing criteria and evidentiary burdens established in FERC policy. Nothing in these Protocols alters or changes those criteria and evidentiary burdens. See also Section 3.c. of the Protocols.

[3] Such notice may also incorporate by reference applicable disclosure statements filed with the Securities and

(iv) shall be subject to review and challenge, in accordance with the procedures set forth in this Schedule 10-A.1, to verify that the input data is properly recordable and recorded, and otherwise consistent with Section 1.f.(i) and the Fundamental Predicates, and that the Formula Rate has been applied according to its terms and the procedures in this Schedule 10-A.1 (including terms and procedures related to challenges concerning consistency with and changes in Fundamental Predicates); and

(v) shall not seek to amend the Formula Rate, and except as provided in Section 1.h, below, shall not be subject to Preliminary or Formal Challenge seeking to amend the Formula Rate (i.e., all amendments to the Formula Rate (including return on common equity and other items specified in Section 1.i, below) shall require, as applicable, a Federal Power Act Section 205 or Section 206 filing).

g. All change(s) to the Fundamental Predicates set forth in Section 1.e, above, (other than through Ministerial Filings pursuant to Section 5 hereof that update FERC Form 1 or USoA references and do not make substantive changes to the Formula Rate), subsequent to the date specified in Section 1.e, shall warrant a re-assessment of all of the elements of the Formula Rate that are affected by the change or changes in one or more Fundamental Predicates to ensure that the Formula Rate operates together to produce a just, reasonable and not unduly discriminatory or preferential Formula Rate. Changes to the Fundamental Predicates that require a change to the Formula Rate will be perfected by the Transmission Provider through a filing under Federal Power Act Section 205.

Exchange Commission ("SEC").

h. Any interested party seeking changes in the application of the Formula Rate (including a change to the Formula Rate itself) due to a change in one or more of the Fundamental Predicates shall raise the matter with the Transmission Provider. If such changes to the application of the Formula Rate for the current Annual Update are not resolved within one hundred and twenty (120) days of the Publication Date, any interested party shall have the right to challenge such application of the Formula Rate, in the manner otherwise provided pursuant to this Schedule 10-A.1, due to the change(s) in such Fundamental Predicates. The final resolution of any such challenge(s), including interest calculated in accordance with 18 C.F.R. § 35.19a, (a) shall be effective on June 1 of the year in which the Annual Update was performed; and, (b) shall be applied to the true up for the calendar year upon which the Annual Update is based.

i. The values for (i) rate of return on common equity, (ii) depreciation rates, and (iii) annual storm damage accruals and the maximum storm damage reserve level are deemed an integral part of the Formula Rate, not subject to change except pursuant to an FPA Section 205 or 206 filing.

j. All data provided pursuant to and in accordance with the procedures set forth in this Schedule 10-A.1 may be used in any challenge to the Annual Update of the Formula Rate.

k. It is the intent of the Formula Rate, including the supporting explanations and allocations described therein, that each input to the Formula Rate will be either taken directly from the FERC Form No. 1 or reconcilable to the FERC Form No. 1 by the application of clearly identified and supported information. Where the

reconciliation is provided through a worksheet included in the filed Formula Rate template, the inputs to the worksheet must meet this transparency standard, and doing so will satisfy this transparency requirement for the amounts that are output from the worksheet and input to the main body of the Formula Rate.

Section 2 Annual Review Procedures

Each Annual Update shall be subject to the following review procedures ("Annual Review Procedures"):

a. Each year the Transmission Provider shall organize a meeting or conference call among interested parties ("Customer Meeting") during which the Transmission Provider shall present details about its Annual Update. The Customer Meeting shall also provide interested parties the chance to seek information and clarifications from the Transmission Provider about the Annual Update. The Customer Meeting shall take place no later than thirty (30) days after the Publication Date, at a date and time posted on the Transmission Provider's internet website on or before the Publication Date but in no event less than fifteen (15) days before such Customer Meeting.

b. In addition to the informal means of requesting and sharing information about the Annual Update set forth in Section 2.a, any interested party shall have up to one hundred twenty (120) days after the Publication Date (unless such period is extended with the written consent of the Transmission Provider) to review the calculations ("Review Period") and to notify the Transmission Provider in writing of any specific challenges, including challenges related to changes in Fundamental Predicates, to the application of the Formula Rate ("Preliminary

Challenge"). Notice of such Preliminary Challenges shall be promptly posted (at the same location as the Annual Update) by the Transmission Provider.

c. Interested parties shall have up to ninety (90) days after each annual Publication Date (unless such period is extended with the written consent of the Transmission Provider) to serve reasonable information requests on the Transmission Provider. Such information requests shall be limited to what is necessary to determine that the input data is properly recordable and recorded, consistent with Section 1.f.(i) and the Fundamental Predicates and with the application of the Formula Rate and the procedures in this Schedule 10-A.1, and to determine the extent and effect(s) of changes in the Fundamental Predicates. In addition, except as to allocation of intangible plant and prepayments, such information requests shall not solicit information that solely relates to inputs that are stated values or cost allocation methods that have been determined by any final order by the FERC pursuant to FPA Sections 205, 206, or 306 with respect to the Transmission Provider (including an order approving a settlement), except that such information requests shall be permitted if they seek to determine if there have been material changed circumstances and to confirm consistency with the applicable order (and associated settlement, if any).

d. The Transmission Provider shall make a good faith effort to respond to information requests pertaining to the Annual Update within fifteen (15) business days of receipt of such requests. Such data responses shall be served on all customers and other parties identifying themselves to the Transmission Provider as interested.

e. Subject to the limitations in Section 3.e, the failure to make a Preliminary Challenge to an Annual Update shall not act as a bar with respect to making a Formal Challenge as to that Annual Update nor shall failure to make a Preliminary Challenge or Formal Challenge as to any Annual Update act as a bar to a Preliminary Challenge or Formal Challenge related to any subsequent Annual Update.

Section 3 Resolution of Challenges and Correction of Errors or Mistakes

a. If the Transmission Provider and an interested party who has raised a Preliminary Challenge have not resolved a Preliminary Challenge to an Annual Update, the interested party shall have the right to make a Formal Challenge with the FERC, pursuant to 18 C.F.R. § 385.206, and Sections 206 and/or 306 of the Federal Power Act, at any time after thirty (30) days after the Review Period, subject, however, to Sections 3.e and 3.f below. Otherwise, interested parties shall have the right to make a Formal Challenge at any time as provided in these Protocols, subject also to Sections 3.e and 3.f below. Each Formal Challenge shall be served on the Transmission Provider by electronic service on the date of such filing. However, there shall be no need to make a Formal Challenge or to await conclusion of the time periods in Section 2 if the FERC already has initiated a proceeding to consider the Annual Update.

b. Any response by the Transmission Provider to a Formal Challenge must be submitted to the FERC within thirty (30) days of the date of the filing of the Formal Challenge, and shall be served on the filing party(ies) by electronic service on the date of such filing.

c. In any proceeding initiated by the FERC concerning the Annual Update or in response to a Formal Challenge, the Transmission Provider shall bear the burden of proving that it has reasonably applied the terms of the Formula Rate (including, but not limited to, consistency with the Fundamental Predicates), and the applicable procedures in this Schedule 10-A.1, for that year's Annual Update; provided, however, that challenges to the prudency of costs shall apply then-existing criteria and evidentiary burdens established in FERC policy applicable to prudence challenges in a Section 205 context.

d. In any proceeding initiated under Federal Power Act Section 206 to change the Formula Rate (as distinguished from a Formal Challenge under these Protocols), the filing party shall bear the burden of proof. Changes to the Formula Rate that result from such a Section 206 proceeding shall not be effective before the refund effective date that is assigned to such proceeding. Refunds resulting from a Formal Challenge, on the other hand, are controlled by Section 4.d.

e. Subject to judicial review of FERC orders, each Annual Update shall become final and hence no longer subject to challenge or to change pursuant to these Formula Rate Implementation Protocols, except as provided in Sections 3.f and 4, by the FERC or by any entity (including the Transmission Provider), twelve (12) months following the Publication Date (or extended period, if applicable), except that an Annual Update may thereafter be changed in accordance with the resolution of any Formal Challenges or FERC-initiated proceedings related to the Annual Update that have been initiated prior to but are outstanding and

unresolved as of 12 months following the Publication Date (or extended period if applicable).

f. Notwithstanding the finality provisions of Section 3.e with respect to each Annual Annual Update, if an error or mistake in an Annual Update ("Year X Update") is discovered by an interested party or the Transmission Provider within two (2) years of the end of the year in which the Year X Update was posted, and the Transmission Provider agrees with the correction, the Transmission Provider shall promptly file a Revised Annual Update for the Year X Update, as provided in Section 4 below, to reflect the correction of such error or mistake.[4] If the Transmission Provider disagrees with any proposed correction, then (i) the Transmission Provider shall promptly notify in writing the party or parties raising the need for that correction and all Transmission Customers of such disagreement, and (ii) any interested party may within sixty (60) days following such notification file or initiate a Formal Challenge seeking such correction, notwithstanding the provisions of Section 3.e above. Any errors or mistakes discovered by either an interested party or the Transmission Provider to an Annual Update beyond the two-year period will not be corrected. However, both the Transmission Customer and the Transmission Provider retain their respective rights under the Federal Power Act. For the avoidance of doubt, an example

[4] With respect to any given Annual Update or Annual True-up, an error or mistake is defined as any error or mistake in implementing the Formula Rate, including but not limited to (i) making or using an invalid numerical calculation or using a calculation that is otherwise inconsistent with the Formula Rate, and (ii) an error or mistake in one or more input values used in the calculation of the Annual Update or Annual True-Up, including (without limitation) an error or mistake reflected in the FERC Form No. 1 or underlying books and records of the Transmission Provider.

reflecting the application of this provision is provided in the margin below.[5] Consistent with Section 4 of these Protocols, appropriate refunds or additional amounts billed hereunder will include interest in accordance with 18 C.F.R. § 35.19a. For purposes of this section, an error or mistake will be deemed "discovered" when the entity that identifies the error or mistake gives written notice to the Transmission Provider and/or the interested parties, as applicable, of the error or mistake.

g. Except as provided in Section 1.h, no interested party may seek to amend the Formula Rate by means of a Preliminary or Formal Challenge. Except as specifically provided herein, nothing herein shall be deemed to limit in any way (i) the right of the Transmission Provider to file unilaterally, pursuant to FPA Section 205 and the regulations thereunder, proposed changes to the Formula Rate or any of its inputs that are stated values, or (ii) the right of any interested party to request such changes pursuant to FPA Section 206 and the regulations thereunder.

h. It is recognized that resolution of Formal Challenges concerning changes in Fundamental Predicates shall necessitate adjustments to the Formula Rate input data for the applicable Annual Update or changes to the Formula Rate that are affected by the change or changes in one or more Fundamental Predicates to ensure that all elements of the Formula Rate that are affected by the change in the

[5] If in 2016 an error or mistake is discovered by any interested party or the Transmission Provider regarding the 2014 Annual Update, the 2014 Annual Update would be amended to reflect the correction of such error or mistake, i.e., the true-up for calendar year 2013 would be adjusted and revised billings issued for that year; if, however, the error or mistake regarding the 2014 Annual Update were discovered by any interested party or the Transmission Provider in 2017 (or thereafter), neither the interested party nor the Transmission Provider would have a basis for seeking relief regarding the 2014 Annual Update.

Fundamental Predicate(s) operate together to produce a just, reasonable and not unduly discriminatory or preferential Formula Rate.

Section 4 **Changes to Annual Informational Filings**

Following the publication of an Annual Update, the Annual Update and the unit charges resulting therefrom may be changed (i) to correct errors or mistakes therein, subject to the finality and error correction provisions in Sections 3.e and 3.f, (ii) to reflect the resolution of Preliminary Challenges or Formal Challenges by settlement, or (iii) to reflect actions by FERC, and the resulting changed Annual Update shall be referred to as a "Revised Annual Update." As to each such Revised Annual Update:

a. If the unit charges resulting from the Annual Update performed pursuant to Section 1.a(i) or (ii) hereof or previous revisions thereto (referred to as the "Then-Current Annual Update") are still in effect, the unit charges shall be changed to reflect the Revised Annual Update beginning with the next monthly billing cycle for which it is practical to do so.

b. For Network Integration Transmission Service and Long-Term Firm Point-to-Point Transmission Service:

(i) If, at the time of the revision to an Annual Update pursuant to Section 4.a above, the amounts billed using the unit charges from such Then-Current Annual Update have not been trued-up to reflect actual costs and demands pursuant to Section 1.a(iii) hereof, such billed amounts shall be recomputed using the unit charges resulting from the Revised Annual Update, and appropriate refunds provided, or additional amounts billed, as soon as practical following the change.

(ii) If, at the time of the Revised Annual Update, the amounts billed using the unit charges from the Then-Current Annual Update shall have been trued up to reflect actual costs and demands pursuant to Section 1.a(iii) hereof, such true-up shall be recomputed on the basis of each Revised Annual Update, and appropriate additional refunds made or amounts billed as soon as practical following the subject change.

c. For Short-Term Firm Point-to-Point Transmission Service and Non-Firm Point-to-Point Transmission Service:

(i) All billed amounts made to Transmission Customers that shall have been computed using the unit charges resulting from the Then-Current Annual Update at issue (i.e., charges for service provided during the period beginning June 1 immediately following the original preparation of the Annual Update at issue) shall be recomputed using the unit charges resulting from the Revised Annual Update, and appropriate refunds provided, or additional amounts billed, as soon as practical following the change.

d. All refunds and additional charges to Transmission Customers resulting from changes to an Annual Update shall include interest determined in accordance with 18 C.F.R. § 35.19a and (a) shall be effective on June 1 of the year in which the Annual Update was performed; and, (b) shall be applied to the true up for the calendar year upon which the Annual Update is based. All such refunds and additional charges shall also appropriately take into account refunds and additional charges, if any, that shall have previously been made in connection

with prior changes, if any, to the subject Annual Update.

e. If the subject change set forth in Section 4.d above is not the direct result of an order by FERC, the Transmission Provider shall promptly file with FERC the Revised Annual Update in connection with the subject Annual Update and shall promptly update its internet posting associated therewith. The aspects of the Revised Annual Update that are different from the subject Annual Update and any elements affecting those changes or that are affected by such changes will obtain a new Publication Date, which shall be the date of filing of the Revised Annual Update at FERC.

Section 5 Update of Formula Rate for FERC Form No. 1 and USoA References

At such time as the Transmission Provider finds appropriate, it may make a filing with FERC under Section 205 that updates the FERC Form No. 1 and USoA references in its Formula Rate to reflect any FERC-mandated changes in the format for the FERC Form No. 1 or USoA that do not affect the rates for Transmission Service derived from the Annual Update (the "Ministerial Filing"), which proceeding may not be used to raise issues unrelated to the proposed changes ("Limited 205 Proceeding"). Alternatively, the Form 1 and USoA reference changes that could be made in a Ministerial Filing may be filed as part of a filing under Federal Power Act Section 205 to otherwise amend the Formula Rate, in which proceeding any issues related to the Formula Rate may be raised ("Normal 205 Proceeding"). Prior to or between any such Limited 205 Proceeding or Normal 205 Proceeding, to the extent changes in the FERC-mandated format of the Form 1 or USoA cause the then current Form 1 or USoA to depart from the Form 1 or USoA referenced in the Formula Rate but does not affect the rates for Transmission Service

derived from the Annual Update, the Transmission Provider's Annual Update shall include a reconciliation so that interested parties can confirm that the Formula Rate is being applied consistent with the as-filed Formula Rate.

Schedule 10-A.2 Formula Rate Template
[DEF Zone]

DUKE ENERGY FLORIDA, LLC
OATT Transmission Non-Levelized Rate Formula Template Using Form-1 Data

Summary of Rates

Line		Reference	Total	Allocator	OATT Transmission
1	**Gross DEF Revenue Requirement**	Page 3, Line 37			0
	Revenue Credits:				
2	Acct 454 - Transmission Related	Exhibit DEF - 3	0	D/A 1.00000	0
3	Acct 456 - NF + STF Service (x/ Ancillaries)	Exhibit DEF - 3	0	D/A 1.00000	0
4	**Total Revenue Credits**		0		0
5	**Interest Disbursed with Network Prepayment Refunds**				0
6	**Revenue Req't - Customer Owned Facilities**				0
7	**Net Revenue Requirements** (Line 1 - Line 4 + Line 5 + Line 6)				0
8	**Divisor - Sum of Monthly MW Transmission System Peaks (Excludes STF)**	p.5, line 15 Total			0
9	**Trans. Rev Req't Rate $/MW-Mon.**	Line 7 / Line 8			0
10	**Storm Reserve Adder**	Page 5, Line 9			219
11	**Total Firm Monthly Trans. $/MW-Month**	Line 9 + Line 10			0
12	**Annual Firm Trans $/MW-year**	Line 11 * 12			0
13	**Weekly Firm/Non-Firm PTP Rate $/MW-Week**	Line 12 / 52			0.00
	Daily Firm/Non-Firm PTP Rates ($/MW):				
14	On-Peak Days	Line 13 / 5			0.00
15	Off-Peak Days	Line 13 / 7			0.00
	Non-Firm Hourly PTP Rates ($/MWh):				
16	On-Peak Hours	Line 14 / 16			0.00
17	Off-Peak Hours	Line 15 / 24			0.00

DUKE ENERGY FLORIDA, LLC
OATT Transmission Non-Levelized Rate Formula Template Using Form-1 Data

Development of Rate Base and Capital Structure

Line	RATE BASE:	Reference	Beginning Balance	Ending Balance	B/E Average	Allocator		OATT Transmission
	Gross Plant in Service (Note A):							
1	Production Plant	204&205.46.b&g	0	0	0	N/A		
2	Transmission Plant (Note V)	206&207.58.b&g	0	0	0			
2A	Less Direct Assign Radials	DEF - 7, ll 1&5	0	0	0			
2B	Trans. Plant w/o Direct Assign Radials					TP	0.00000	0
3	Distribution Plant	206&207.75.b&g	0	0	0	N/A		
4	General Plant	206&207.99.b&g	0	0	0	OATT LABOR	0.00000	0
5	Intangible Plant	204&205.5.b&g	0	0	0	OATT LABOR	0.00000	0
6	**Total Gross Plant**				0	GP =	0.00000	0
	Accumulated Depreciation:							
7	Production Depr. Reserve	219.20 thru 24.c	0	0	0	N/A		
8	Transmission Depr. Reserve (Note V)	219.25.c	0	0	0			
8A	Less Direct Assign Radials	DEF - 7, ll 7&10	0	0	0			
8B	Trans. Reserve w/o Direct Assign Radials		0	0	0	TP	0.00000	0
9	Distribution Depr. Reserve	219.26.c	0	0	0	N/A		
10	General Depr. Reserve	219.28.c	0	0	0	OATT LABOR	0.00000	0
11	Intangible Amort. Reserve	200.21.c	0	0	0	OATT LABOR	0.00000	0
12	**Total Accumulated Depr.**				0			0
	Net Plant in Service							
13	Net Production Plant	Line 1 - Line 7			0			
14	Net Transmission Plant	Line 2 - Line 8			0			0
15	Net Distribution Plant	Line 3 - Line 9			0			
16	Net General Plant	Line 4 - Line 10			0			0
17	Net Intangible Plant	Line 5 - Line 11			0			0
18	**Total Net Plant**				0	NP =	0.00000	0
	Adjustments to Rate Base - Deferred Taxes & Net (Excess) / Deficient Deferred Tax Adj							
19	ADIT - 190	234.8.b&c	0	0	0	Exhibit DEF - 5		-
20	ADIT - 281 (Negative)	272&273.8.b&k	0	0	0	Exhibit DEF - 5		0
21	ADIT - 282 (Negative)	274&275.2.b&k	0	0	0	Exhibit DEF - 5		0
22	ADIT - 283 (Negative)	276&277.9.b&k	0	0	0	Exhibit DEF - 5		0
23	Net (Excess) / Deficient Deferred Tax Adj	Exh DEF - 5, pg 5, ln 7	0	0	0	Exhibit DEF - 5		0
24	**Total Deferred Tax Adjustments**				0			0
25	**Unfunded Reserves**	Note U	0	0	0	Exhibit DEF-5A		0
26	**Net 182.1 (+) / Storm Reserve (-) - Wholesale**	230a.5.f	0	0	0	p. 5, l. 15	3.00491	0
27	**Plant Held for Future Use**	214.47.d	0	0	0	Note C		0
28	**Transmission Related CWIP - Identified Projects (Note V):**		0	0	0		0.50000	0
	Rate Base Adjustments - Network Upgrade Prepayments (Note O):							
29	Outstanding Balance - Network Prepayments (Note T)		0	0	0	D/A	(1.00000)	0
30	Interest Accrued/Capitalized on Network Prepayments		0	0	0	D/A	1.00000	0
31	**Total Network Upgrade Prepayment Adjustments**							0
	Working Capital:							
32	Cash Working Capital (1/8 O&M)	Page 3, line 17						0
33	M&S - Transmission	227.5 (assigned), 8.b&c	0	0	0	TExp	0.00000	0
34	M&S - Stores Expense	227.16.b&c	0	0	0	OATT LABOR	0.00000	0
35	Prepayments (Notes L and X)							
35A	Long Term Service Agreements							
35B	Production & Distribution	111.57.c&d	0	0	0	Other	0.00000	0
35C	Transmission	111.57.c&d	0	0	0	TP	0.00000	0
35D	Other Prepayments	111.57.c&d	0	0	0	GP	0.00000	0
36	**Total Working Capital**							0
37	**Rate Base (Sum of Lines 18, 24 thru 28, 31, and 36)**							0
	AVERAGE CAPITALIZATION:							
38	Long-Term Debt	112.24.c&d	0	0	0			
39	Less Loss on Reacquired Debt	111.81.c&d	0	0	0			
40	Plus Gain on Reacquired Debt	113.61.c&d	0	0	0			
41	Less Securitization Bonds	Note I	0	0	0			
42	Net Long Term Debt				0			
43	Preferred Stock	112.3.c&d	0	0	0			
	Common Stock Development:							
44	Proprietary Capital	112.16.c&d	0	0	0			
45	Less Preferred Stock	112.3.c&d	0	0	0			
46	Less Account 216.1	112.12.c&d	0	0	0			
47	Common Stock				0			
48	Total Capitalization (Sum of Lines 42, 43, and 47)				0			

DUKE ENERGY FLORIDA, LLC
OATT Transmission Non-Levelized Rate Formula Template Using Form-1 Data

Development of Revenue Requirements

Line	EXPENSES:	Reference	Total	Allocator		OATT Transmission
	O&M Expense					
1	TOTAL Transmission Expenses	321.112.b	0			
2	Less Account 561	321.84-92.b	0			
3	Less Account 565	321.96.b	0			
4	Net Transmission O&M	Note H	0	TExp	0.00000	0
5	Total Admin & General Expenses (Note S)	323.197.b	0			
5A	Post-Employment Benefits Other than Pension Expense included in line 5 for information only	Note S	0			
6	Less (924) Property Insurance	323.185.b	0			
7	Less (928) Regulatory Commission Expenses	323.189.b	0			
8	Less (930.1) General Advertising Expenses	323.191.b	0			
9	Less Industry Dues and R&D Expense	335.1-3.b	0			
10	Net Labor Related A&G		0	OATT LABOR	0.00000	0
11	(924) Property Insurance	323.185.b	0			
12	Less system storm reserve funding		0			
13	Net Allocated Property Insurance		0	GP	0.00000	0
14	Trans. Related Regulatory Expense	Note D		D/A	1.00000	0
15	Trans. Related Advertising Exp.	Note D		D/A	1.00000	0
16	[omitted]					
17	**Total O&M (Sum of Lines 4, 10, and 13 thru 16)**					**0**
	Depreciation Expense					
18	Transmission Depr. Expense (Note V)	336.7.f	0			
18A	Less Direct Assign Radial Depr Exp	DEF-7, line 8	0			
18B	Trans Depr. w/o Direct Assign Radials		0	TP	0.00000	0
19	General Depr. Expense	336.10.f	0	OATT LABOR	0.00000	0
20	Intangible Amortization (Note E)	336.1.f	0	OATT LABOR	0.00000	0
21	**Total Depreciation**		0			**0**
	Taxes Other Than Income (Note F)					
22	Labor Related	263.i	0	OATT LABOR	0.00000	0
23	Property Related	263.i	0	GP	0.00000	0
24	**Total Other Taxes**		0			**0**
	Return:					
25	Rate Base (Page 2, Line 37) * Rate of Return (Page 4, Line 27)					**0**
	Income Taxes:					
26	State of Florida	Note M	0.00%			
27	Federal	Note M	0.00%			
28	Composite T = State + Federal * (1 - State)		0.00%			
29	Tax Rev.Req't Factor = T / (1 -T) * (1 - Wtd.Debt.Cost/R0)		0.00%			
30	Tax Gross Up Factor = 1 / (1 -T)		0.000			
31	Amortized ITC (Negative)	266.8.f	0			
32	ITC Adjustment (Line 30 * Line 31)		0	NP	0.00000	0
33	Net (Excess) / Deficient Deferred Tax Expense	Exh 5, p5, ln14	0			
34	Deferred Tax Adjustments (Line 30 * Line 33)					0
35	Income Taxes Calculated (Line 25 * Line 29)					0
36	**Total Income Taxes (Sum of Lines 32, 34 and 35)**					**0**
37	**TOTAL REVENUE REQUIREMENT (Sum of Lines 17, 21, 24, 25,and 36)**					**0**

DUKE ENERGY FLORIDA, LLC
OATT Transmission Non-Levelized Rate Formula Template Using Form-1 Data

Supporting Allocation Factor and Return Calculations

Line		Reference	Total
	B/E Avg. Transmission Plant Included in OATT Rate:		
1	Total Transmission Plant w/o D/A Radials	p 2, line 2B	0
2	Less Gen. Step-up Transformers in 353	Exhibit DEF - 4	0
3	Less Interconnection Facilities (Order 2003)	Exhibit DEF - 4	0
4	Less Energy Control Center	Note G	0
5	Avg.Trans Plant for OATT Rate		0
6	**TP Allocator (Line 5 / Line 1)**	Note H	0.00000
7	Add Back ECC to OATT Plant (Line 4 + Line 5)		0
7A	Add back D/A Radials to Total Trans Plt (line 1 + p2, l 2A)		0
8	**TExp Allocator (Expenses excluding 561 and 565) (Line 7 / Line 7A)**		0.00000
	Labor Allocation Factor		
9	Total Direct Payroll - O&M Labor	354.28.b	0
10	A&G Labor	354.27.b	0
11	Adj. - RCO Labor in A&G Labor		0
12	Adjusted Labor w/o A&G (Line 9 - Line 10 + Line 11)		0
13	Transmission O&M Labor	354.21.b	
14	**Trans Labor Factor (Line 13 / Line 12)**		0.00000
15	**OATT LABOR Allocator (Line 5 / Line 7A * Line 14)**	Note H	0.00000
	Return and Average Capitalization:		
16	Long-Term Interest Expense	117.62 thru 67.c	0
17	Less Interest on Securitization Bonds	Note I	0
18	Net-Long Term Interest Expense		0
19	Preferred Dividends (positive)	118.29.c	0
20	Long-Term Debt	p.2, line 42	0
21	Preferred Stock	p.2, line 43	0
22	Common Stock	p.2, line 47	0
23	Total Capitalization (sum Lines 20, 21, 22)		0

	SUMMARY CAP STRUCTURE	Weight	Cost	Weighted Cost
24	Long-Term Debt	0.00%	0.00%	0.00%
25	Preferred Stock	0.00%	0.00%	0.00%
26	Common Equity	0.00%	**10.00%**	0.00%
27	**Overall Return: R_0 =**			**0.00%**

DUKE ENERGY FLORIDA, LLC
OATT Transmission Non-Levelized Rate Formula Template Using Form-1 Data

Wholesale Storm Reserve Funding

Line		Reference	Total	Allocator		OATT Transmission
1	**Transmission % of Whlse Damage from years 2016 through 2019**					
2	Trans. Related Pct of Whlse Loss	Note J	0.88260	WEPL-T		
3	**2018 Transmission Plant Allocator**			TP2018	0.94915	
	Components of Reserve Funding Adder - Note N:					
4	Balance of OATT Wholesale Reserve	Estimate (DB)/CR				(15,275,519)
	Rebuild Reserve Equivalent to $130MM Retail:					
5	Whlse Portion of $6MM Funding	ER95-469	434,000	Fixed	0.07233	
6	System Total Reserve Req't = 130MM/(1 - Line 5 %)		140,136,543			
7	Whlse Reserve Needed = Line 6 - $130MM		10,136,543	WEPL-T*TP2018	0.83772	8,491,597
8	**Amount Needed to Rebuild Reserve**	Line 7-Line 4				**23,767,116** *
9	**Levelized Storm Reserve Funding Rate $/MW-Month (DEF - 6, Page 2)**					**219**
	Denominator for Wholesale Transmission:					
10	Firm Network Service for Self	400.17.e	89,733	0.00000		0
11	Firm Network Service for Others (Note K)	400.17.f	33,228	1.00000		33,228
12	Long-Term Firm PTP Reservations	400.17.g	1,018	1.00000		1,018
13	Other Long-Term Firm Service	400.17.h	440	1.00000		440
14	Contract Demand Adjustment		0	1.00000		0
15	Total System Long-Term Firm Transmission Load		124,419			34,686
16	**Gross-up Factor for OATT Wholesale Reserve - System Basis** (Total Load/Whlse Load * 0.83772)					3.004913509

*The Amount Needed to Rebuild Reserve shall be adjusted to reflect any disallowance by the Florida Public Service Commission in Docket Nos. 20190110 & 20190222

DUKE ENERGY FLORIDA, LLC
OATT Transmission Non-Levelized Rate Formula Template Using Form-1 Data

Explanatory Notes

Note A: Excludes Asset Retirement Obligations from plant balances

Note B: Because the Page 2 Rate Base amounts are total system numbers, the wholesale specific loss/reserve balance is grossed up using the relationship between system and wholesale only transmission demands times the percent of the balance applicable to the OATT. See also Notes H and J.

Note C: FERC Form 1 page 214 excluding non-transmission related items

Note D: Analysis of Company books. Regulatory expense excludes charges by FERC pursuant to 18 CFR § 382.201

Note E: Excludes Retail ECCR and Sebring amortizations from Form-1 reported value

Note F: Excludes all income and gross receipts taxes. Labor related other taxes include FICA and unemployment taxes. Property related taxes include county and local property, highway use, and intangible taxes.

Note G: Investment in Transmission Energy Control Center included in Schedule 1 Ancillary Service cost.

Note H: The allocator "TP" is the percent of allocated gross transmission plant that is OATT related, i.e., after removal of ECC, interconnections and generator step-up transformer investment.

Note I: To the extent DEF is authorized by the Florida Public Service Commission and issues bonds for distribution facilities to securitize retail recovery of extraordinary property losses, associated principal and interest expense are excluded in capitalization and return basis.

Note J: Functionalized Transmission portion of Extraordinary Property Losses balance only, "WEPL-T." Consistent with the process described in Note H above, the OATT-related amount of the transmission loss is then derived using the TP allocation factor

Note K: Includes Network Integration Service

Note L: Beginning balance excludes $0 and ending balance excludes $0 for prepaid pensions from Form-1 A/C 165 balances.

Note M: If income tax rates change during a calendar year, the income tax rates will be pro-rated based on the number of days each income tax rate was in effect.

Note N: Pursuant to the settlement agreement, annual amounts will be adjusted and reversed as necessary to ensure no overfunding of the wholesale reserve; i.e., the year-end reserve balance for OATT rates will not exceed the $8,491,597 shown on line 7.

Note O: Payments by DEF to an Affected System Operator pursuant to Orders 2003 or 2006 (including rehearing orders) are not to be included in the formula rate regardless of the accounting.

Note P: Target percentages are fixed for June 2020 - May 2023 and were derived from projected OATT LTF billing MW-months and the MW-month equivalent billings for STF and non-firm transmission revenues were estimated from actual experience.

Note Q: Actual LTF OATT MW-Months are as reported in Form-1 for Firm Network Service for Others and Long Term Firm Point-to-Point Service

Note R: Actual STF/Non-Firm equivalent "MW-Months" are equal to monthly STF/Non-firm transmission service revenue divided by the same "Total Firm Monthly Trans. $/MW-Month" rate (Page 1, Line 11) from which the STF/Non-firm billing rates were derived

Note S: Section 2.12 of Schedule 10.3 states “The Formula Rate excludes all costs that are properly directly assigned or assignable to one or more particular customers, including costs directly assigned or assignable to DEF.” Per Settlement of 2008 Annual Update, the amount specified excludes directly assignable retail costs/credits booked to Account 935 and retail sales tax portion of Florida sales tax audit expense booked to Account 930.2 from Form-1 reported value. DEF will provide, in connection with each Annual Update, a copy of the entire annual actuarial valuation report supporting the derivation of the annual Postretirement Benefits Other than Pensions (“PBOP”) expense as charged to FERC account 926, and the amount of such expense included in Total Admin and General Expenses provided on Exhibit DEF-2, page 3, line 5 of the Formula Rate. DEF will provide, in connection with each Annual Update, a worksheet that shows the actual PBOP expense components and calculation derivation (including, for each account to which PBOP expense is recorded, the account number, expense amount, description, calculation derivation and source).

Note T: Network prepayments include interest that has been accrued but not yet refunded.

Note U: The inclusion of Line 24, "Unfunded Reserves," ensures that identified "Unfunded Reserves" are appropriately excluded from rate base in the Formula Rate calculations. The specific treatment of these "Unfunded Reserves" in no way precludes the Transmission Provider or interested parties from making any argument in any proceeding at the Commission or in any review or challenge proceeding under the Formula Rate as to the appropriate accounting or ratemaking treatment in the Formula Rate of any unfunded reserve.

Note V: Adjusted to remove AFUDC accruals from CWIP projects that were included in rate base. Qualifying CWIP excludes CWIP associated with direct assignment radials. The actual projects are listed on DEF-9. See also Schedules 10-A.3 § 2.2 and Schedule 10.A.4.

Note W: Should DEF construct and own radials directly assignable to wholesale customers, DEF shall make a Section 205 filing to amend its Formula Rate Template to remove the costs associated with wholesale direct assignment radials from the calculation of the OATT base rates. A new attachment (e.g., Exhibit DEF-x) shall be added to the template that sets forth the direct assignment radials by customer and by facility, showing the associated monthly balances for gross plant and accumulated depreciation reserves separately by project. The intent is that the accumulated depreciation reserves be maintained separately by customer and by project to capture the associated costs by customer and to reflect the appropriate effect of the vintage of each project. Such Exhibit DEF-x shall be structured to accommodate direct assignments to multiple wholesale customers. Exhibit DEF-2 shall be modified to remove the direct assignment wholesale radials from the base rate calculations in a manner consistent with retail radials, except that Exhibit DEF-2 shall be further modified to set forth separately the costs allocated to each wholesale customer's direct assignment radials in the aggregate in separate columns. Such Section 205 filing shall be made sufficiently in advance of the first occurrence of a direct assignment wholesale transmission radial to permit the requisite modifications to the Formula Rate Template to become effective with the in-service date of the associated facility.

Note X: The prepayments allocable to transmission service under the Formula Rate shall exclude prepayments for service and materials under service agreements for the equipment replacement, or operation and maintenance, including refurbishment, of production or distribution facilities of the Company. However, prepayments for such service and materials for Company-owned transmission facilities shall be allocated using the transmission plant allocator. Remaining prepayments shall continue to be allocated on the basis of gross plant investment.

Note Z: Excess/Deficient Deferred Tax Expense shall equal the return or collection of excess or deficient deferred taxes as shown in DEF - 5 - pages 6 and 7 of this file. The differentiation of Unprotected PPE and Unprotected Non-PPE will only be provided if the amortization period differs for each category. If the amortization period for each is the same, total Unprotected will be reported on the Unprojected Non-PPE line. The return or collection of excess or deficient deferred taxes that result from any future federal or state income tax rate change, will be presented in the format of DEF - 5 - page 8, which DEF will populate and provided subsequent to such tax change.

Note AA: The allocation factor to be applied to TCJA balances is 0.1502 and is based on a historic 2017 system-wide deferred income tax balances that were allocated to Transmission. The beginning Unprotected Excess ADIT for OATT for TCJA includes an adjustment for the amortization of Protected Excess ADIT for OATT for TCJA that was reclassified to Unprotected, prior to June 1, 2020, when the Excess ADIT begins to be returned to OATT customers. Excess/ Deficient Deferred Income Tax balances due to future tax rate changes will be allocated based on the historical system-wide deferred income tax balances that were allocated to Transmission for the year of the tax rate change. The allocation factor applied to the future tax rate changes will be identified in a new sentence added to this Note.

DUKE ENERGY FLORIDA, LLC
Transmission Rate Formula Support - Revenue Credits
Account 454

		Transmission
Total Account 454	**0**	**0**

DUKE ENERGY FLORIDA, LLC
Transmission Rate Formula Support - Revenue Credits
Account 456.1

Form 1 Reference	Payment by (Column (b))	Classification (Col (d))	Rate Schedule (Col (e))	Total Revenues (Column (n))
	Total Transmission for Others			**0**
	Total Classified as Non-Firm = Revenue Credit			**0**
	Short Term Firm - Revenue Credit			**0**
	Total 456 NF + STF Revenue			**0**
	Less Associated Ancillaries			**0**
	Net OATT Revenue Credit			**0**

DUKE ENERGY FLORIDA, LLC
Transmission Rate Formula Support - Account 353 Generator Step-up Transformers

Plant	Bank	Peaker/ Unit	Book Cost	Vintage
Total			**$0**	

DUKE ENERGY FLORIDA, LLC

Transmission Rate Formula Support - Interconnection Facilities
Generation In-Service After March 15, 2000 per FERC Order 2003

Unit(s)	Description	Beginning Balance	Ending Balance	B/E Average
Total Interconnection Facilities		0	0	0

DUKE ENERGY FLORIDA, LLC
Accumulated Deferred Tax Detail - Prior Year

Account	Description	Accumulated Deferred Tax at 12/31/xxxx	Allocator	Factor	Result
190					
	Balance in Account 190	**0**			**0**
281					
	Balance in Account 281	**0**			**0**
282					
	Balance in Account 282	**0**			**0**
283					
	Balance in Account 283	**0**			**0**
	Total Accumulated Deferred Income Tax	**0**			**0**

DUKE ENERGY FLORIDA, LLC
Accumulated Deferred Tax Detail - Current Year

Account	Description	Accumulated Deferred Tax at 12/31/xxxx	Allocator	Factor	Result
190					
	Balance in Account 190	**0**			**0**
281					
	Balance in Account 281	**0**			**0**
282					
	Balance in Account 282	**0**			**0**
283					
	Balance in Account 283	**0**			**0**
	Total Accumulated Deferred Income Tax	**0**			**0**

Duke Energy Florida, LLC
Accumulated Excess/ Deficient Deferred Income Tax Balances

Line	Item (Note Z)	SYSTEM Beginning Balance Dr(Cr)	SYSTEM Ending Balance Dr(Cr)	SYSTEM Average Balance Dr(Cr)	OATT (Note AA) Beginning Balance Dr(Cr)	OATT (Note AA) Ending Balance Dr(Cr)	OATT (Note AA) Average Balance Dr(Cr)
1	Regulatory Assets for Deficient ADIT - Protected						
2	Regulatory Assets for Deficient ADIT - Unprotected PPE						
3	Regulatory Assets for Deficient ADIT - Unprotected Non-PPE						
4	Regulatory Liabilities for Excess ADIT - Protected						
5	Regulatory Liabilities for Excess ADIT - Unprotected PPE						
6	Regulatory Liabilities for Excess ADIT - Unprotected Non-PPE						
7	Net Deficient/Excess ADIT Rate Base	$ -	$ -	$ -	$ -	$ -	$ -
8	Collection of Deficient Deferred Tax Expense - Protected [1]						
9	Collection of Deficient Deferred Tax Expense - Unprotected PPE [1]						
10	Collection of Deficient Deferred Tax Expense - Unprotected Non-PPE [1]						
11	Amortization of Excess Deferred Tax Expense - Protected [1]						
12	Amortization of Excess Deferred Tax Expense - Unprotected PPE [1]						
13	Amortization of Excess Deferred Tax Expense - Unprotected Non-PPE [1]						
14	Net Excess/ Deficient Deferred Tax Expense	$ -			$ -		

Notes:

[1] In the event of a partial year amortization, the Transmission amortization amounts on this schedule will be annualized (i.e. adjusted to reflect a full 12-months amortization) for OATT revenue requirement and ratemaking purposes. This requires the modification of the formulas for partial year amortization years only. For example under TCJA, the first year of amortization, 2020, is seven months; the amortization amounts in this schedule will be adjusted to reflect a full 12-months of amortization for OATT revenue requirement and ratemaking purposes.

Duke Energy Florida, LLC
Protected Federal Excess Deferred Tax Worksheet

	190	**282**	**283**	**Total**
Pre-Remeasurement ADIT	217,571,975	(2,192,379,851)	-	(1,974,807,876)
Post-Remeasurement ADIT	347,342,979	(1,440,463,184)	-	(1,093,120,205)
ADIT Remeasurement	129,771,004	751,916,667	-	881,687,671
Offset (Dr.)/Cr.	*Dr./(Cr.)*	*Dr./(Cr.)*	*Dr./(Cr.)*	*Dr./(Cr.)*
TCJA Remeasurement	**190**	**282**	**283**	**Total**
182.3	-	-	-	-
254 (Gross-Up Only)	211,306,871	-	-	211,306,871
254 (Excl Gross-up)	-	-	-	-
Balance Sheet Only Total [5]	211,306,871	-	-	211,306,871
182.3	-		-	-
Deferred Debits	-	*698,117,029*	-	*698,117,029*
Deferred Credits	*(75,701,781)*	-	-	*(75,701,781)*
254	(75,701,781)	698,117,029	-	622,415,249
EDIT Liability Total	(75,701,781)	698,117,029	-	**622,415,249**
Debits	*(5,833,876)*	-	-	*(5,833,876)*
Credits	-	*53,799,638*	-	*53,799,638*
411.2	(5,833,876)	53,799,638	-	47,965,761
Def Inc Tax Exp Total [5]	(5,833,876)	53,799,638	-	47,965,761
Total Change in ADIT	129,771,215	751,916,667	-	881,687,882

		(A)	**(B)**	**(C1)**	**(C2)**	**(D)**	**(E)**		**(F)**	**(G1)**	**(G2)**	**(H)**
				(A) x (System-level balance)	**(A) x (System-level balance)**	**(B)-(C1)-(C2)-(D)**		**(X)**		**(A) x (Transmission-level balance)**	**(A) x (Transmission-level balance)**	**(F-G1-G2)**
Year [1]		**Amortization Rate** [2]	**Beginning year balance**	**Current year - Excess ADIT Liabilities amortization-411.1** [3]	**Current year - Deficient ADIT Assets amortization-410.1** [3]	**OATT Reclass to unProtected** [4]	**Remaining Balance**	**Unamortized Gross-Up Balance** [6]	**Transmission-level Beginning year balance** [Note AA]	**Current year - Excess ADIT Liabilities amortization-411.1** [3]	**Current year - Deficient ADIT Assets amortization-410.1** [3]	**Transmission-level Remaining Balance**
	2018	3.28%	622,415,249	19,669,216	-	762,088	601,983,945	204,370,546	xx	xx	-	xx
	2019	3.37%	601,983,945	20,168,430	-	781,430	581,034,086	197,258,173	xx	xx	-	xx
	2020	3.33%	581,034,086	20,422,537	-	322,423	560,289,126	190,215,363	85,971,343	1,815,691	-	84,155,652
	2021	3.97%	560,289,126	24,188,056	-	521,932	535,579,138	181,826,445	83,881,080	3,707,533		80,173,547

Notes:

[1] The return of the Protected portion of excess Federal ADIT generated by the 2017 Tax Cuts and Jobs Act ("TCJA") for retail began in 2018, in accordance with paragraph 16.c of DEF's 2017 Second Settlement Revised and Restated Settlement Agreement, approved by the Florida Public Service Commission in Order No. PSC-2017-0451-AS-EI. For OATT, this return will begin on June 1, 2020; therefore,the first year will reflect 7 months of amortization. The total number of years necessary for the return of the protected portion of excess Federal ADIT to customers will be determined by the Average Rate Assumption Method ("ARAM"), which will change over time.

[2] Protected Excess Federal ADIT will be amortized using ARAM, which will change over time. DEF will base the ARAM rate on the last filed final Federal Corporate Income tax return after all permitted federal extensions as of the date of the posting of the Annual Update, prior to the start of the Annual Update review process. DEF will incorporate updated ARAM into the following year's annual updates and associated true-up calculations.

[3] Amortization for the first year began in 2018 for retail; amortization for the first year for OATT will begin June 1, 2020. Therefore, the first year of OATT amortization will reflect 7 months. Current year amortization amounts may include true-up adjustments as necessary to reflect actual annual EDIT amortization. Deficient Deferred Income Tax Assets for all years will be amortized to account 410.1. Excess Deferred Income Tax Liabilities for all years will be amortized to account 411.1. The ADIT source account for amortization is determined based on the proportion of the ADIT balance that was transferred to the "EDIT Liability Total" row.

[4] DEF reclassified the OATT portion of the Protected Excess ADIT to Unprotected Excess ADIT. This amount is included in the Unprotected Excess ADIT balance to return to customers beginning June 1, 2020.

[5] The Balance Sheet Only and Def Inc Tax Exp sections do not affect OATT rate base or the OATT revenue requirement. These are provided for compliance purposes only.

[6] Unamortized Gross-Up balance is subject to future changes in the corporate income tax rate, which may change the unamortized gross-up amounts. The Remaining Unamortized Gross-Up Balance is calculated using the applicable deferred income tax rate for each period.

Duke Energy Florida, LLC
Unprotected Federal Excess Deferred Tax Worksheet

	190	282	283	Total
Pre-Remeasurement ADIT	573,410,359	(75,020,176)	(1,647,274,353)	(1,148,884,169)
Post-Remeasurement ADIT	456,094,313	(35,264,833)	(1,053,671,148)	(632,841,668)
ADIT Remeasurement	(117,316,046)	39,755,343	593,603,204	516,042,501
Offset (Dr.)/Cr.	*Dr./(Cr.)*	*Dr./(Cr.)*	*Dr./(Cr.)*	*Dr./(Cr.)*
TCJA Remeasurement	**190**	**282**	**283**	**Total**
182.3	-	50,937,413	62,591,087	113,528,500
254 (Gross-Up Only)	59,753,402	-	-	59,753,402
254 (Excl Gross-up)	(3,568,553)	-	-	(3,568,553)
Balance Sheet Only Total [5]	56,184,849	50,937,413	62,591,087	169,713,349
182.3	-	-	-	-
Deferred Debits	*11,290,919*	*269,517,681*	*339,423,487*	*620,232,087*
Deferred Credits	*(172,474,199)*	*(267,734,040)*	*(4,017,132)*	*(444,225,371)*
254	(161,183,281)	1,783,642	335,406,355	176,006,716
EDIT Liability Total	(161,183,281)	1,783,642	335,406,355	176,006,716
Debits	*(13,291,539)*	*(32,040,171)*	*(1,509,458)*	*(46,841,167)*
Credits	*973,924*	*22,687,141*	*197,110,226*	*220,771,292*
411.2	(12,317,614)	(9,353,030)	195,600,769	173,930,125
Def Inc Tax Exp Total [5]	(12,317,614)	(9,353,030)	195,600,769	173,930,125
Total Change in ADIT	(117,316,046)	43,368,025	593,598,211	519,650,190

Year		(B) / (System Level Balance) (A) Amortization Rate [1]	(B) Beginning year balance	(C1) Current year - Excess ADIT Liabilities amortization-411.1 [2]	(C2) Current year - Deficient ADIT Assets amortization-410.1 [2]	(D) OATT Reclass from Protected [4]	(B-C1-C2-D) (E) Remaining Balance	(X) Unamortized Gross-Up Balance [6]	(F) Amortization Rate [2]	(G) Transmission-level Beginning year balance [Note AA]	(F) x (Transmission-level balance) (H1) Current year - Excess ADIT Liabilities amortization-411.1 [3]	(F) x (Transmission-level balance) (H2) Current year - Deficient ADIT Assets amortization-410.1 [3]	(G-H) (I) Transmission-level Remaining Balance
	2018	18.36%	176,006,716	33,072,210	-	(762,088)	143,696,594	48,784,277	xx	xx	xx	0	xx
	2019	18.35%	143,696,594	33,072,210	-	(781,430)	111,405,814	37,821,718	xx	xx	xx	0	xx
	2020	19.96%	111,405,814	35,446,113	-	(322,423)	76,282,124	25,897,401	11.67%	33,951,636	3,961,024	-	29,990,612
	2021	20.13%	76,282,124	35,951,845	-	(521,932)	40,852,211	13,869,122	20.00%	30,265,185	6,858,970		23,406,214
	2022	20.34%	40,852,211	35,798,160	-	-	5,054,051	1,715,825	20.00%	23,406,214	6,858,970		16,547,244
	2023	1.19%	5,054,051	2,091,331	-	-	2,962,720	1,005,829	20.00%	16,547,244	6,858,970		9,688,273
	2024	1.19%	2,962,720	2,091,331	-	-	871,389	295,832	20.00%	9,688,273	6,858,970		2,829,303
	2025	0.50%	871,389	871,389	-	-	0	0	8.33%	2,829,303	2,829,303		0

Notes:

[1] The System Amortization Rate (A) reflects the blended rate result from the combined retail and OATT amortization results, net of the OATT Reclass from Protected in Column (D).

[2] DEF's Unprotected Excess ADIT are amortized over five years, in accordance with paragraph 16.c of DEF's 2017 Second Revised and Restated Settlement Agreement, approved by the Florida Public Service Commission in Order No. PSC-2017-0451-AS-EI. Amortization for the first year began in 2018 for retail; amortization for the first year for OATT will begin June 1, 2020. Therefore, the first year of OATT amortization will reflect 7 months; retail and OATT will be amortized over different five-year periods. Deficient Deferred Income Tax Assets for all years will be amortized to account 410.1. Excess Deferred Income Tax Liabilities for all years will be amortized to account 411.1. The ADIT source account for amortization is determined based on the proportion of the ADIT balance that was transferred to the "EDIT Liability Total" row.

[3] Amortization for the first year began in 2018 for retail; amortization for the first year for OATT will begin June 1, 2020. Therefore, the first year of OATT amortization will reflect 7 months. Current year amortization amounts may include true-up adjustments as necessary to reflect actual annual EDIT amortization.

[4] DEF reclassified the OATT portion of the Protected Excess ADIT to Unprotected Excess ADIT. This amount is included in the Unprotected Excess ADIT balance to return to customers beginning June 1, 2020.

[5] The Balance Sheet Only and Def Inc Tax Exp sections do not affect OATT rate base or the OATT revenue requirement. These are provided for compliance purposes only.

[6] Unamortized Gross-Up balance is subject to future changes in the corporate income tax rate, which may change the unamortized gross-up amounts. The Remaining Unamortized Gross-Up Balance is calculated using the applicable deferred income tax rate for each period.

Duke Energy Florida, LLC
Generic – [Return/ Collection of Future Excess/ Deficient] Deferred Taxes – [Protected/ Unprotected PPE/ Unprotected Non-PPE] Portion

	190	**282**	**283**	**XYZ[1]**	
Pre-Remeasurement ADIT					-
Post-Remeasurement ADIT					-
ADIT Remeasurement	-	-	-	-	-
Offset (Dr.)/Cr.	*Dr./(Cr.)*	*Dr./(Cr.)*	*Dr./(Cr.)*	*Dr./(Cr.)*	*Dr./(Cr.)*
Income Tax Remeasurement	**190**	**282**	**283**	**XYZ[1]**	**Total**
182.3					-
254 (Excl Gross-up)					-
254 (Gross-Up Only)					
Balance Sheet Only Total	-	-	-	-	-
Deferred Debits					-
Deferred Credits					-
182.3					-
Deferred Debits					-
Deferred Credits					-
254					-
Excess/Deficient DIT Total [2]	-	-	-	-	-
Debits					-
Credits					-
Account xxx [4]					-
Def Inc Tax Exp Total	-	-	-	-	-
Total Change in ADIT	-	-	-	-	-

Year [1]	**(A) Amortization Rate [3]**	**(B) Beginning year balance**	**(A) x (System-level balance) (C1) Current year - Excess ADIT Liabilities amortization-411.1 [3]**	**(A) x (System-level balance) (C2) Current year - Deficient ADIT Assets amortization-410.1 [3]**	**OATT Reclass to unProtected/Protected 4**	**(B)-(C1) - (C2) (D) Remaining Balance**	**(X) Remaining Unamortized Gross-Up Balance [4]**	**(E) Amortization Rate [3]**	**(F) Transmission-level Beginning year balance [Note AA]**	**(E) x (Transmission-level balance) (G1) Current year - Excess ADIT Liabilities amortization-411.1 [3]**	**(E) x (Transmission-level balance) (G2) Current year - Deficient ADIT Assets amortization-410.1 [3]**	**(F-(G1)-(G2) (H) Transmission-level Remaining Balance**

Notes:

[1] Account will be populated with the account remeasured as a result of the Federal or State tax rate change and the amount will be the excess or deficient ADIT contained therein.

[2] The [Protected/Unprotected PPE/Unprotected Non-PPE] portion of [excess/deficient] ADIT generated by [Insert Name of Federal or State Tax Law] will be returned to or collected from customers over a [X] year period, effective [Insert Date].
The amortization period for unprotected excess or deficient ADIT will be no longer than a reasonable estimate of the average remaining lives of the underlying assets. If a future tax rate change requires the collection of deficient ADIT from customers, the amortization period will reasonably balance the DEF's need to fund the tax liability against rate shock to customers. If the future tax rate change requires return of excess ADIT to customers, the amortization period will reasonably balance the benefits of returning excess ADIT to customers with the DEF's cash flow and credit risks.

[3] The total number of years necessary for the [return of the Protected portion of excess ADIT] or [recovery of the Protected portion of deficient ADIT] to customers will be determined by the ARAM rate, which will change over time, or a methodology consistent with the tax normalization rules in place at the time of the tax rate change. Deficient Deferred Income Tax Assets for all years will be amortized to account 410.1.
Excess Deferred Income Tax Liabilities for all years will be amortized to account 411.1.

[4] Unamortized Gross-Up balance is subject to future changes in the corporate income tax rate, which may change the unamortized gross-up amounts.
The Remaining Unamortized Gross-Up Balance is calculated using the applicable deferred income tax rate for each period.

DUKE ENERGY FLORIDA, LLC

Unfunded Reserves

Account	Description	Beginning Balance	Ending Balance	B/E Average	Allocator	Value	Result
	Identified Reserves:						
	Total Reserves	0	0	0			0
	Less Externally Funded Amounts:						
	Total Externally Funded Amounts	0	0	0			0
	Net Unfunded Reserves	0	0	0			0

DUKE ENERGY FLORIDA, LLC
Transmission Rate Formula Support - List of Inputs from FERC Form-1

Page	Row	Column	Description	Reference	Beginning Balance	Ending Balance or Annual Value
111	57	c&d	Prepayments	111.57.c&d		
111	81	c&d	Loss on Reacquired Debt	111.81.c&d		
112	3	c&d	Preferred Stock Issued	112.3.c&d		
112	12	c&d	Account 216.1	112.12.c&d		
112	16	c&d	Proprietary Capital	112.16.c&d		
112	24	c&d	Long-Term Debt	112.24.c&d		
113	61	c&d	Gain on Reacquired Debt	113.61.c&d		
117	62 thru 67	c	Long-Term Interest Expense	117.62 thru 67.c		
118	29	c	Preferred Dividends (positive)	118.29.c		
200	21	c	Intangible Amort. Reserve	200.21.c		
204&205	5	b&g	Intangible Plant	204&205.5.b&g		
204&205	46	b&g	Production Plant	204&205.46.b&g		
206&207	58	b&g	Transmission Plant	206&207.58.b&g		
206&207	75	b&g	Distribution Plant	206&207.75.b&g		
206&207	99	b&g	General Plant	206&207.99.b&g		
214	47	d	Plant Held for Future Use (Trans. Only)	214.47.d		
219	20 thru 24	c	Production Depr. Reserve	219.20 thru 24.c		
219	25	c	Transmission Depr. Reserve	219.25.c		
219	26	c	Distribution Depr. Reserve	219.26.c		
219	28	c	General Depr. Reserve	219.28.c		
227	5 (assigned), 8	b&c	M&S - Transmission	227.5 (assigned), 8.b&c		
227	16	b&c	M&S - Stores Expense	227.16.b&c		
230a	5	b	Total Extraordniary Property Loss - Wholesale	230a.5.b		
230a	5	e	Total Extraordniary Property Loss - Wholesale	230a.5.e		
230a	5	f	Extraordinary Property Losses - Balance	230a.5.f		
234	8	b&c	ADIT - 190	234.8.b&c		
263	4	i	Other Taxes - FICA	263.4.i		
263	5	i	Other Taxes - Unemployment Taxes	263.5.i		
263	6	i	Other Taxes - Highway & Fuel Taxes	263.6.i		
263	11	i	Other Taxes - Unemployment Taxes	263.11.i		
			Other Taxes - Intangibles	..		
263	18	i	Other Taxes - Property Taxes	263.18.i		
266	8	f	Amortized ITC (Negative)	266.8.f		
266&267	8	b&h	Accum Deferred ITC - 255 (Negative)	266&267.8.b&h		
272&273	8	b&k	ADIT - 281 (Negative)	272&273.8.b&k		
274&275	2	b&k	ADIT - 282 (Negative)	274&275.2.b&k		
276&277	9	b&k	ADIT - 283 Excluding FAS 109 (Neg.)	276&277.9.b&k		
321	84 thru 92	b	(561) Transmission of Electricity by Others	321.84 thru 92.b		
321	96	b	(565) Transmission of Electricity by Others	321.96.b		
321	112	b	TOTAL Transmission Expenses	321.112.b		
323	185	b	(924) Property Insurance	323.185.b		
323	189	b	(928) Regulatory Commission Expenses	323.189.b		
323	191	b	(930.1) General Advertising Expenses	323.191.b		
323	197	b	Total Admin & General Expenses	323.197.b		
335	1	b	Industry Association Dues	335.1.b		
336	1	f	Intangible Amortization	336.1.f		
336	7	f	Transmission Depr. Expense	336.7.f		
336	10	f	General Depr. Expense	336.10.f		
354	21	b	Transmission O&M Labor	354.21.b		
354	27	b	A&G Labor	354.27.b		
354	28	b	Total Direct Payroll - O&M Labor	354.28.b		
400	17	e	Firm Network Service for Self	400.17.e		
400	17	f	Firm Network Service for Others	400.17.f		
400	17	g	Long-Term Firm PTP Reservations	400.17.g		
400	17	h	Other Long-Term Firm Service	400.17.h		
400	17	i	Short-Term Firm PTP Reservations	400.17.i		

Rate Base Items from Prior Year Form 1 (Year End Value Where Not Available as Beginning Balance Above)

200	21	c	Intangible Amort. Reserve	200.21.c		
214	47	d	Plant Held for Future Use (Trans Only)	214.47.d		
219	20 thru 24	c	Production Depr. Reserve	219.20 thru 24.c		
219	25	c	Transmission Depr. Reserve	219.25.c		
219	26	c	Distribution Depr. Reserve	219.26.c		
219	28	c	General Depr. Reserve	219.28.c		
230a	5	f	Extraordinary Property Losses - Balance	230a.5.f		

DUKE ENERGY FLORIDA, LLC

OATT Settlement - 2019 Storm Treatment

Line No.							
1	**Determination of Levelized Storm Damage Recovery Adder**						
2							
3	**Total Funding Requirements**						
4							
5	Total Funding Requirements						
6							
7	Rebuild Reserve	(DEF-2, Page 5, Line 7)	8,491,597				
8	Total June 2020 - May 2023		$8,491,597				
9	Less:						
10	OATT Wholesale Reserve	(DEF-2, Page 5, Line 4)	(15,275,519)				
11							
12	**Amount Needed to Rebuild Reserve**		$23,767,116				
13							
14							
15							
16	**Annual Recovery Requirements (3 yr recovery)**		**6/2020-5/2021**	**6/2021-5/2022**	**6/2022-5/2023**		**Total**
17							
18	Projected Billing Units (MW-months)						
19	LTF on OATT	(Projected and Fixed)	34,789	35,201	35,611		105,601
20	STF/Non-Firm on OATT	(Projected and Fixed)	1,000	1,000	1,000		3,000
21	Total Projected Billing Units		35,789	36,201	36,611		108,601
22							
23	Annual Percentages	(Fixed - Note P)	32.95%	33.33%	33.71%		100.0%
24							
25	Annual Recovery Requirements						
26	Amortize Existing Loss	N/A					
27	Rebuild Reserve	(Ln 23 * Ln 12)	7,832,304	7,922,451	8,012,361		23,767,116
28	Total		$7,832,304	$7,922,451	$8,012,361		$23,767,116
29							
30	**Levelized Storm Damage Recovery**						
31	**Adder ($/MW-mo)**	(Line 28 / Line 21)	**$219**	**$219**	**$219**		**$219**
32							
33	**Example Application of Levelized Adder and Annual True-Up**						
34							
35	Actual Billing Units (MW-months) (Notes Q and R)						
36	LTF on OATT	(Actual MW-Months)	36,528	36,961	37,392		110,881
37	STF/Non-Firm on OATT	(Actual Equiv. MW-Months)	1,050	1,050	1,050		3,150
38	Total Billing Units	(Line 36 + Line 37)	37,578	38,011	38,442		114,031
39							
40	Actual Recoveries of Reserve Replenishment						
41	LTF on OATT	(Line 31 * Line 36)	$7,994,128	$8,088,783	$8,183,188		$24,266,099
42	STF/Non-Firm on OATT	(Line 31 * Line 37)	229,791	229,791	229,791		689,373
43	Total Collections	(Line 41 + Line 42)	$8,223,919	$8,318,574	$8,412,980		$24,955,472
44							
45	**Over(Under) Recovery to Be Reflected**						
46	**In Annual True-Ups**	(Line 43 - Line 28)	**391,615**	**396,123**	**400,618**		**1,188,356**
47							
49							
50	**Storm Reserve Balance Tracking:**						
51							
52	Beginning Balance		(15,275,519)	(7,443,216)	479,235		**8,491,597**
53							
54	Funding From OATT Adder	(Line 28)	7,832,304	7,922,451	8,012,361		
55							
56							
57	Ending Balance		(7,443,216)	479,235	8,491,597		**8,491,597**
58							
59	Maximum Reserve per Settlement		8,491,597	8,491,597	8,491,597		8,491,597
60							
61	Adjustment:		0	0	(0)		(0)

DUKE ENERGY FLORIDA
PREPAYMENTS FOR NETWORK UPGRADES

252 Customer advances for construction.
This account shall include advances by customers for construction which are to be refunded either wholly or in part. When a customer is refunded the entire amount to which he is entitled, according to the agreement or rule under which the advance was made the balance, if any, remaining in this account shall be credited to the respective plant account.

EXAMPLE

NETWORK UPGRADE COST		$ 1,000,000
DEPRECIABLE LIFE		40-YRS
ANNUAL FERC INTEREST RATE	ANNUALLY	6%
REFUND OVER 5 -YRS	ANNUALLY	$ 200,000

SCENARIO 1:

YEAR OF IN-SERVICE:

DESCRIPTION	FERC	DEBIT	CREDIT
ELEC. PLNT IN-SVC	101	$ 1,000,000	
CUSTOMER ADVANCES	252		$ 1,000,000

1st REFUND:

DESCRIPTION	FERC	DEBIT	CREDIT
CASH	130		$ 260,000
CUSTOMER ADVANCES	252	$ 200,000	
INTEREST EXP	431	$ 60,000	

	RATE BASE	EXPENSE
FORMULA INPUT - EPIS $_{YR-1}$	**$ 1,000,000**	
BEGINNING BAL.	$ (1,000,000)	
INTEREST EXPENSE $_{YR-1}$	$ (60,000)	$ 60,000
REFUND $_{YR-1}$	$ 260,000	
FORMULA INPUT $_{YR-1}$	**$ (800,000)**	**$ 60,000**
FORMULA INPUT - EPIS $_{YR-2}$	**$ 1,000,000**	
FORMULA ACCUM. DEP $_{YR-2}$	**$ (25,000)**	
BEGINNING BAL.	$ (800,000)	
INTEREST EXPENSE $_{YR-2}$	$ (48,000)	$ 48,000
REFUND $_{YR-2}$		
FORMULA INPUT $_{YR-2}$	**$ (848,000)**	**$ 48,000**

SCENARIO 2:

RECOVERY OF INTEREST: PER AGREEMENT WITH CUSTOMERS, INTEREST WILL BE RECOVERED UPON PAYMENT AND NOT AS ACCRUED. THIS WILL CREATE A REGULATORY ASSET TO RECOGNIZE THE DEFERRED COST RECOVERY.

YEAR OF IN-SERVICE:

DESCRIPTION	FERC	DEBIT	CREDIT
ELEC. PLNT IN-SVC	101	$ 1,000,000	
CUSTOMER ADVANCES	252		$ 1,000,000

YR-1 NO REFUND:

DESCRIPTION	FERC	DEBIT	CREDIT
CUSTOMER ADVANCES	252		$ 60,000
INTEREST ACCRUED	431	$ 60,000	
REG ASSET (INTEREST ACCRUED)	182.3	$ 60,000	
INTEREST ACCRUED DEFERRAL	407.4		$ 60,000

YR-5 WITH REFUND:

DESCRIPTION	FERC	DEBIT	CREDIT
CUSTOMER ADVANCES	252	$ 1,338,226	
CASH	131		$ 1,338,226
REG ASSET (INTEREST ACCRUED)	182.3		$ 338,226
INTEREST ACCRUED DEFERRAL	407.3	$ 338,226	

	RATE BASE	EXPENSE
IF NOT REFUNDED UNTIL YR 5, THAN:		
BEGINNING BAL.	$ (1,000,000)	
INTEREST ACCRUED $_{YR-1}$	$ (60,000)	$ (60,000)
REG. ASSET (INTEREST ACCRUED) $_{YR-1}$	$ 60,000	$ 60,000
FORMULA INPUT $_{YR-1}$	**$ (1,000,000)**	**$ -**
INTEREST ACCRUED $_{YR-2}$	$ (63,600)	$ (63,600)
REG. ASSET (INTEREST ACCRUED) $_{YR-2}$	$ 63,600	$ 63,600
FORMULA INPUT $_{YR-2}$	**$ (1,000,000)**	**$ -**
INTEREST ACCRUED $_{YR-3}$	$ (67,416)	$ (67,416)
REG. ASSET (INTEREST ACCRUED) $_{YR-3}$	$ 67,416	$ 67,416
FORMULA INPUT $_{YR-3}$	**$ (1,000,000)**	**$ -**
INTEREST ACCRUED $_{YR-4}$	$ (71,461)	$ (71,461)
REG. ASSET (INTEREST ACCRUED) $_{YR-4}$	$ 71,461	$ 71,461
FORMULA INPUT $_{YR-4}$	**$ (1,000,000)**	**$ -**
INTEREST ACCRUED $_{YR-5}$	$ (75,749)	$ (75,749)
REG. ASSET (INTEREST ACCRUED) $_{YR-5}$	$ 75,749	$ 75,749
REFUND $_{YR-5}$	$ 1,000,000	$ 338,226
FORMULA INPUT $_{YR-5}$	**$ -**	**$ 338,226**

DUKE ENERGY FLORIDA, LLC

Transmission Rate Formula Support - Direct Assignment Retail Radials in Accordance with OATT Attachment U

Line	Project Description:	Project 1	Project 2	…	…	…	…	Project N	Total Projects
	Gross Plant in Service:								
1	Beginning Balance	0	0					0	0
2	Additions	0	0					0	0
3	Retirements	0	0					0	0
4	Adjustments	0	0					0	0
5	Ending Balance	0	0					0	0
6	B/E Average	0	0					0	0
	Accumulated Depreciation:								
7	Beginning Balance	0	0					0	0
8	Annual Deprecation Expense	0	0					0	0
9	Adjustments	0	0					0	0
10	Ending Balance	0	0					0	0
11	B/E Balance	0	0					0	0

DUKE ENERGY FLORIDA, LLC
Transmission Rate Formula Support – Depreciation Rates

Depreciation and Amortization Rates by FERC Account	Florida PSC Approved Rate*
STEAM PRODUCTION	
Anclote Steam	
311 Structures and Improvements	0.9
312 Boiler Plant Equipment	10.4
314 Turbogenerator Units	7.7
315 Accessory Electric Equipment	5.5
316 Misc. Power Plant Equipment	5.5
Crystal River 4 & 5 Steam	
311 Structures and Improvements	3.9
312 Boiler Plant Equipment	5.0
314 Turbogenerator Units	5.2
315 Accessory Electric Equipment	4.5
316 Misc. Power Plant Equipment	5.5
OTHER PRODUCTION	
Bartow Units 1 and 3	
341 Structures and Improvements	7.5
342 Fuel Holders, Prod. and Accessories	5.8
343 Prime Movers - General	6.4
344 Generators	3.7
345 Accessory Electric Equipment	6.0
346 Misc. Power Plant Equipment	5.3
Bartow Units 2 and 4	
341 Structures and Improvements	3.3
342 Fuel Holders, Prod. and Accessories	4.0
343 Prime Movers - General	10.2
344 Generators	4.7
345 Accessory Electric Equipment	5.2
346 Misc. Power Plant Equipment	6.1
Bartow Combined Cycle - Unit 4	
341 Structures and Improvements	4.3
342 Fuel Holders, Prod. and Accessories	6.9
343 Prime Movers - General	3.2

DUKE ENERGY FLORIDA, INC.
Transmission Rate Formula Support – Depreciation Rates

Depreciation and Amortization Rates by FERC Account	Florida PSC Approved Rate*
343.10 Prime Movers - Rotable Parts	14.7
344 Generators	3.5
345 Accessory Electric Equipment	2.8
346 Misc. Power Plant Equipment	4.0
Bayboro Peaking	
341 Structures and Improvements	9.3
342 Fuel Holders, Prod. and Accessories	8.6
343 Prime Movers	1.4
344 Generators	8.7
345 Accessory Electric Equipment	8.8
346 Misc. Power Plant Equipment	10.4
Citrus Units 1 and 2	
341 Structures and Improvements	2.7
342 Fuel Holders, Prod. and Accessories	3.0
343 Prime Movers - General	3.2
343.10 Prime Movers - Rotable Parts	9.2
344 Generators	2.8
345 Accessory Electric Equipment	2.8
346 Misc. Power Plant Equipment	3.4
Debary Peaking	
341 Structures and Improvements	4.5
342 Fuel Holders, Prod. and Accessories	5.5
343 Prime Movers	3.2
344 Generators	6.2
345 Accessory Electric Equipment	5.2
346 Misc. Power Plant Equipment	4.2
Debary Peaking P7-10 (New)	
341 Structures and Improvements	1.1
342 Fuel Holders, Prod. and Accessories	3.0
343 Prime Movers	0.9
344 Generators	0.9
345 Accessory Electric Equipment	1.1
346 Misc. Power Plant Equipment	(0.0)

DUKE ENERGY FLORIDA, INC.
Transmission Rate Formula Support – Depreciation Rates

Depreciation and Amortization Rates by FERC Account	Florida PSC Approved Rate*
Hines Energy Complex	
341 Structures and Improvements	3.3
342 Fuel Holders, Prod. and Accessories	1.6
343 Prime Movers	5.8
343.1 Prime Movers - Rotable Parts	13.2
344 Generators	2.1
345 Accessory Electric Equipment	3.9
346 Misc. Power Plant Equipment	6.1
Hines Energy Complex Unit # 2	
341 Structures and Improvements	1.0
342 Fuel Holders, Prod. and Accessories	2.4
343 Prime Movers	5.5
343.1 Prime Movers - Rotable Parts	12.4
344 Generators	2.9
345 Accessory Electric Equipment	3.8
346 Misc. Power Plant Equipment	3.5
Hines Energy Complex Unit # 3	
341 Structures and Improvements	1.8
342 Fuel Holders, Prod. and Accessories	(4.9)
343 Prime Movers	5.8
343.1 Prime Movers - Rotable Parts	15.2
344 Generators	2.1
345 Accessory Electric Equipment	1.9
346 Misc. Power Plant Equipment	3.1
Hines Energy Complex Unit # 4	
341 Structures and Improvements	2.0
342 Fuel Holders, Prod. and Accessories	2.3
343 Prime Movers	4.1
343.1 Prime Movers - Rotable Parts	12.4
344 Generators	2.9
345 Accessory Electric Equipment	2.6
346 Misc. Power Plant Equipment	3.5

DUKE ENERGY FLORIDA, INC.

Transmission Rate Formula Support – Depreciation Rates

Depreciation and Amortization Rates by FERC Account	Florida PSC Approved Rate*
Intercession City Peak # 11	
341 Structures and Improvements	0.9
342 Fuel Holders, Prod. and Accessories	1.0
343 Prime Movers	1.4
344 Generators	1.1
345 Accessory Electric Equipment	1.6
346 Misc. Power Plant Equipment	2.4
Intercession City Peak P1-P6	
341 Structures and Improvements	2.5
342 Fuel Holders, Prod. and Accessories	(5.6)
343 Prime Movers	5.8
344 Generators	2.6
345 Accessory Electric Equipment	5.2
346 Misc. Power Plant Equipment	5.5
Intercession City Peak P12-P14	
341 Structures and Improvements	2.5
342 Fuel Holders, Prod. and Accessories	4.2
343 Prime Movers	2.2
344 Generators	1.4
345 Accessory Electric Equipment	1.8
346 Misc. Power Plant Equipment	2.8
Intercession City Peak P7-P10	
341 Structures and Improvements	1.8
342 Fuel Holders, Prod. and Accessories	2.5
343 Prime Movers	3.0
344 Generators	2.3
345 Accessory Electric Equipment	3.5
346 Misc. Power Plant Equipment	4.3
Osprey Energy Center	
341 Structures and Improvements	2.0
342 Fuel Holders, Prod. and Accessories	2.3
343 Prime Movers - General	2.9

Depreciation and Amortization Rates by FERC Account	Florida PSC Approved Rate*
343.10 Prime Movers - Rotable Parts	7.1
344 Generators	2.4
345 Accessory Electric Equipment	2.0
346 Misc. Power Plant Equipment	2.9
Suwannee River Peaking	
341 Structures and Improvements	3.3
342 Fuel Holders, Prod. and Accessories	3.3
343 Prime Movers	4.2
344 Generators	4.3
345 Accessory Electric Equipment	3.5
346 Misc. Power Plant Equipment	3.3
Tiger Bay Cogen	
341 Structures and Improvements	3.3
342 Fuel Holders, Prod. and Accessories	9.6
343 Prime Movers	6.5
344 Generators	7.7
345 Accessory Electric Equipment	8.1
346 Misc. Power Plant Equipment	4.5
University of Fla Cogen	
341 Structures and Improvements	5.8
342 Fuel Holders, Prod. and Accessories	9.8
343 Prime Movers	22.9
344 Generators	5.6
345 Accessory Electric Equipment	6.4
346 Misc. Power Plant Equipment	8.0

Depreciation and Amortization Rates by FERC Account	Florida PSC Approved Rate*
SOLAR PRODUCTION PLANT	
OSCEOLA SOLAR	
341.66 Structures and Improvements	20.8
344.66 Generators	3.3
345.66 Accessory Electric Equipment	3.3
PERRY SOLAR	
341.66 Structures and Improvements	3.8
344.66 Generators	3.4
345.66 Accessory Electric Equipment	3.4
346.66 Miscellaneous Power Plant Equipment	3.6
HAMILTON SOLAR	
341.66 Structures and Improvements	3.1
344.66 Generators	3.4
345.66 Accessory Electric Equipment	3.4
346.66 Miscellaneous Power Plant Equipment	3.4
SUWANNEE SOLAR	
341.66 STRUCTURES AND IMPROVEMENTS	3.4
344.66 GENERATORS	3.4
345.66 ACCESSORY ELECTRIC EQUIPMENT	3.4
DEBARY SOLAR	
341.66 Structures and Improvements	3.4
344.66 Generators	3.4
345.66 Accessory Electric Equipment	3.4
346.66 Miscellaneous Power Plant Equipment	3.4
LAKE PLACID SOLAR	
341.66 Structures and Improvements	3.4
344.66 Generators	3.4
345.66 Accessory Electric Equipment	3.4

Depreciation and Amortization Rates by FERC Account	Florida PSC Approved Rate*
TRENTON SOLAR	
341.66 STRUCTURES AND IMPROVEMENTS	3.4
344.66 GENERATORS	3.4
345.66 ACCESSORY ELECTRIC EQUIPMENT	3.4
COLUMBIA SOLAR	
341.66 Structures and Improvements	3.4
344.66 Generators	3.4
345.66 Accessory Electric Equipment	3.4
346.66 Miscellaneous Power Plant Equipment	3.4
ST PETE PIER SOLAR	
344.66 Generators	3.4
345.66 Accessory Electric Equipment	3.4
NEW SOLAR 2020	
341.66 Structures and Improvements	3.4
344.66 Generators	3.4
345.66 Accessory Electric Equipment	3.4
346.66 Miscellaneous Power Plant Equipment	3.4
NEW SOLAR 2021	
341.66 Structures and Improvements	3.3
344.66 Generators	3.3
345.66 Accessory Electric Equipment	3.3
346.66 Miscellaneous Power Plant Equipment	3.3
348.00 Energy Storage Equipment	6.8
System-Other	
346 Misc. Power Plant Equipment	1.5

DUKE ENERGY FLORIDA, INC.
Transmission Rate Formula Support – Depreciation Rates

Depreciation and Amortization Rates by FERC Account	Florida PSC Approved Rate*

Distribution Plant	
360.10 Land Rights	1.4
361.00 Structures and Improvements	1.4
362.00 Station Equipment	1.8
364.00 Poles, Towers and Fixtures	4.2
365.00 Overhead Conductors and Devices	2.7
366.00 Underground Conduit	1.6
367.00 Underground Conductors and Devices	3.0
368.00 Line Transformers	2.9
369.10 Services-Underground	2.2
369.20 Services-Overhead	4.0
370.00 Meters	6.0
370.02 Meters - AMI	6.7
371.00 Installation on Customers Premises	3.6
373.00 Street Lighting and Signal Systems	4.2
Transmission Plant	
350.10 Land Rights	1.2
352.00 Structures and Improvements	1.4
353.10 Station Equipment	1.8
353.20 Station Equipment-Station Control	1.1
354.00 Towers and Fixtures	1.3
355.00 Poles and Fixtures	3.3
356.00 Overhead Conductors and Devices	1.9
357.00 Underground Conduit	1.2
358.00 Underground Conductors & Devices	2.0
359.00 Roads and Trails	0.9
General Plant	
390.00 Structures and Improvements	3.0
391.00 Office Furniture and Equipment	14.3
Transportation Equipment	
392.10 Passenger Cars	2.6
392.20 Light Trucks	(5.6)
392.30 Heavy Trucks	6.9

DUKE ENERGY FLORIDA, INC.

Transmission Rate Formula Support – Depreciation Rates

Depreciation and Amortization Rates by FERC Account	Florida PSC Approved Rate*
392.40 Special Trucks	13.4

392.50 Trailers	4.8
393.00 Stores Equipment	14.3
394.00 Tools, Shop and Garage Equipment	14.3
395.00 Laboratory Equipment	14.3
396.00 Power Operated Equipment	12.9
397.00 Communication Equipment	14.3
398.00 Miscellaneous Equipment	14.3
Intangible Plant	
302 Franchises and Consents	3.3
303 Miscellaneous Intagible Plant - 5 YR Amoritization	20.0
303.1 Miscellaneous Intagible Plant - 10 YR Amoritization	10.0
303.2 Miscellaneous Intagible Plant - 15 YR Amoritization	6.7

* All rates are those approved in the FPSC ORDER NO. PSC-2021-0202-AS-EI, DOCKET NO. 20210016-EI, with the exception of Intangible Plant which was not addressed in the 2021 Rate Case.

Consistent with Section 1(h)(i) of Schedule 10-A.1 Formula Rate Implementation Protocols, the depreciation rates are not subject to change except pursuant to a Section 205 or 206 filing under the Federal Power Act.

DUKE ENERGY FLORIDA, LLC

CWIP PROJECTS

Project Number	Project Name	Work Order Number	THOR Number
ER08-105 (2007)			
1	Nobleton Tap - Floral City Tap Rebuild		1779
1	Floral City Tap - Install MOS & SCADA	30000505	1779S1
1	Nobleton Tap - Floral City Tap (HB)69 kV line rebuild	30000477	1779T2
1	Floral City (DEF) Line Connection	30000493	1779T4
12	Dale Mabry - Zephyrhills North 230 kV Line		1801
12	60KK8D 1801S1 MORGAN ROAD	20070115	1801S1
12	60KK8D_1801T2_MORGANRD-DMTECO	20072702	1801T2
12	60KK8D_1801T6_DENHAM-MRG L1	20076539	1801T6
12	60KK8D_1801T4_Denham-Tampa Downs Line Reroute to Morgan Rd Sub	20076544	1801T4
12	60KK8D_1801T3_Land O Lakes-Denham Line Reroute to Morgan Rd Sub	20077703	1801T3
12	60KK8D_1801S4-Morgan Rd Switching Station	20095271	1801S4
21	Ulmerton - Gateway 115 kV Rebuild	30000742	2802T1
25	Belleair - Largo 69 kV Rebuild		1958
25	Largo Substation - Upgrade 69 kV Equipment to 2000A	30000820	1958S1
25	Belleair to Largo (LECW-1) - 69 kV Line Rebuild	30000821	1958T1
26	Oakhurst - Seminole 69 kV Rebuild	N/A	1959T1
27	East Clearwater - Highlands Rebuild		1961
27	East Clearwater - Upgrade 69 kV Equipment to 2000A	N/A	1961S1
27	East Clearwater to Highlands (ECTW-1) - 69 kV Line Rebuild	N/A	1961T1
38	Windermere 150 Mvar 230 kV Capacitor	N/A	1192S1
44	Rebuild Lake Bryan - Ruby 69 kV Line		1995
44	Lake Bryan - Upgrade Equipment to 2000A	30000496	1995S1
44	Lake Bryan to Vineland (LV) - 69 kV Line Rebuild	30000370	1995T1
46	Pinecastle - Sky Lake (WR-7) - 69 kV Rebuild 2.34 miles PCSL	20075920	1990T1
47	Rebuild Rio Pinar - Narcossee 69 kV Line		1991
47	Rio Pinar - Upgrade Equipment to 2000A	20070084	1991S1
47	DF - Neutral Reactors - Rio Pinar - Banks 1 and 4	20100662	1991S2
47	Rio Pinar to Narcoossee (RPN) - 69 kV Line Rebuild	20093911	1991T1
51	Rebuild Spring Lake - Keller Road 69 kV Line	30000366	1997T1
54	Rebuild West Lake Wales - Lake Wales 69 kV Lines		1936
54	West Lake Wales - Upgrade 69kV bus	N/A	1936S1
54	WLLW 69kV 4.52 mile rebuild (West Lk Wales-LkWales #1)	N/A	1936T1
54	WLL 69kV 4.46 mile rebuild (West Lk Wales-LkWales #2)	N/A	1936T2
64	Lake Agnes (TECo) to Gifford 230 kV Tie Line		1785
64	Lake Agnes (TECo) to Gifford 230 kV Tie Line	20058126	1785T1
64	Gifford 230kV terminal for the Lake Agnes-Gifford tie line	20062431	1785S2
85	High Springs to Hull Road 69 kV Line Rebuilds		1717
85	GE Alachua - Install GOAB	30000227	1717S3
85	GE Alachua to Hull Road (GH-1, 16.5) 69kV Line Rebuild	20043416	1717T1
85	Alachua to GE Alachua (GH-2) 69kV Line Rebuild	30000190	1717T3
85	Alachua Tap to Alachua (GH-3, 2.31mi) 69kV Line Rebuild	30000191	1717T4
94	Bushnell East 230/69 kV Project	20063144	2232T1
99	West Leon-New 115/69 kV Sub & Associated Lines		1783
99	Tallahassee Sub - Add 115kV Breakered Terminal for Liberty	20084454	1783S2

DUKE ENERGY FLORIDA, LLC

CWIP PROJECTS

Project Number	Project Name	Work Order Number	THOR Number
99	Jackson Bluff to Brickyard Tap	20090776	1783T4
99	Lake Talquin Tap - Add (2) MOS's and SCADA	20084460	1783S5
ER13-1105 (2013)			
113	Deltona to Orange City - New 115kV Line		2253
113	60KK8D_2253T1_DELTONA ORANGE	20078319	2253T1
113	Turner Plant - Retire 115kV Bkrs to Orange City & Deltona	20079871	2253S1
123	Perry to Drifton - New 115kV Ckt and Perry 230/115kV XFMR		2332
123	Perry Sub - New 230/115kV transformer	20087171	2332S1
123	Drifton Sub - Rplc 115kV Cap bank #2 w/new 30MVAR & Breaker	20099490	2332S3
123	Drifton Sub - 230/115kV Xfmr & 115kV Upgrades	30000080	2332S6
123	Eridu Tap 115kV - Add MOS's and SCADA	30000274	2332S7
123	Boyd Tap 115kV - Add MOS's and SCADA	30000320	2332S9
123	Perry Sub - 115kV Termination for new 115kV line to Drifton	20099488	2332T2
123	Drifton Sub - 115kV Termination for new 115kV to Perry	20099489	2332T3
124	60KK8D_2053T3_ATWATER-QUINCY	20075511	2053T3
126	Citrus Center - New 230/69 kV Substation	20087513	2154S2
127	Deland West to St. Johns Tap - 69 kV Line Rebuild	20087501	2217T1
128	Brooksville West - Loop in Brookridge to Hudson 230 kV	30000824	2224S1
129	60KK8D_2231T1 LECANTO-CITRUS	20087518	2231T1
130	Dunnellon to Rainbow Springs Tap (DR) - Rebuild 69 kV Line		2301
130	Dunnellon Tn -Rainbow Spgs Tp 69kV Rbld Phase 1	30000069	2301T1
130	Dunnellon Tn -Rainbow Spgs Tp 69kV Rbld Phase 2	30000070	2301T2
131	Brooksville to Tangerine - 115 kV Line Rebuild	20088093	2323T1
133	Central Florida to Picciola Tap - 69 kV Line Rebuild	30000445	2142T1
ER15-234 (2014)			
134	Bartow – reactor on 115kV cables		2407
134	Bartow 115kV Series Reactor	30000129	2407S1
134	NorthEast - Upgrade Bartow Line Relaying	30000130	2407S2
135	Hudson - Golden Acres Tp - New Port Richey - 115 kV Line Rebuild		2403
135	Hudson - Upgrade Jumpers to Golden Acres	30000200	2403S2
135	Hudson (WREC) Tap - Upgrade Relaying and Communications	30000201	2403S3
135	Hudson Tp - New Port Richey 115kV Line Rebuild	30000202	2403T1
136	SilvSp-Maricamp Rebuild		2065
136	Silver Springs - Maricamp 69 kV Line Rebuild	20087517	2065T1
136	Silver Springs 69 kV Sub - Upgrade	20103962	2065S1
137	Proctor Tap-Cara Tap Rebuild	T30000009	1789T4
138	CR Retirement - Griffin Area - Limiting Element Removal		2474
138	Griffin Sub - Restore 280 MVA Rating to Transformer	20104826	2474S1
138	Barcola Sub - Remove 1600A Wave Trap & Add Fiber Optic	20104827	2474S2
138	Kathleen Sub - Ampacity Upgrade	20104828	2474S3
138	West (LAK) Substation Upgrades	20104825	2474S4
138	Reconnect Kathleen-West (KWX) 230kV line into West sub	20140039	2474T4
138	Reconnect Barcola - West (BLX) 230 kV line into West Sub	20140040	2474T5

DUKE ENERGY FLORIDA, LLC

CWIP PROJECTS

Project Number	Project Name	Work Order Number	THOR Number
139	Dona Vista Sub		2427
139	Dona Vista Sub - Purchase land	20095922	2427S1
139	Dona Vista Sub - Construct New 230/69 kV Substation	30000181	2427S2
139	Haines Ck - Rem Lim Elems and Mod Relays for DonaVista	30000179	2427S3
139	Sorrento - Rem Lim Elem and Modify Relays for DonaVista	30000180	2427S4
139	Dona Vista - Loop in CFS 230kV and EU 69kV Lines	30000172	2427T1
140	Eustis-Dona Vista Line Rebuild	30000171	2426T1
143	JX rebuild and Jasper South		2430
143	Jasper- 115kV Bus Upgrade to 2000A	S30000015	2430S1
143	Rebuild Existing Jasper-Wrights Chapel 115kV Tie (9.59 mi)	20093916	2430T1
144	Tallahassee to Havana Rebuild as Double-ckt 115 & 69		2455
144	Hinson Tap - Install MO for GOAB SW 5377	30000446	2455S3
144	Sutters Creek Tap - Install MOs for GOAB	30000447	2455S4
144	Havana (TEC) Tap - Install MOs for GOAB	30000448	2455S5
144	Lake Jackson Tap - Install Mos for GOAB	30000449	2455S6
144	OakCty-Tall (TQ) 69kV: rbld as dbl ckt 115 and 69kV	30000453	2455T3
145	Jackson Bluff to Lake Talquin Tap 69 kV Rebuild	20100542	1783T5
146	North Longwood to Myrtle Lake - 230 kV Line Rebuild	20093919	2102T1
147	North Longwood to Sylvan (FPL) - 230 kV Line Rebuild		2102
147	NLongwood to FPL Sylvan (NLSX Double-Circuit)- 230kV Rebuild	20100541	2102T2
147	NLongwood to FPL Sylvan (NLSX Single-Circuit)- 230kV Rebuild	30000331	2102T3
148	Debary Plant to Orange City - New 230 kV Line		2382
148	DeBary Plant - New 230 kV Line Terminal	20100711	2382S1
148	Debary Plant to Orange City - New 230 kV Line	20093908	2382T1
149	Rio Pinar to FGT East - 69 kV Line Rebuild	30000386	2098T1
150	West Chapman to Winter Park East - 69 kV Line Rebuild	30000369	2316T1
151	Rio Pinar to Curry Ford - 230 kV Line Rebuild		2244
151	Rio Pinar - Upgrade 230 kV Facilities to 3000A	30000388	2244S1
151	Rio Pinar to Curry Ford (RX) - 230 kV Rebuild	20100539	2244T1
152	Myrtle Lake to Wekiva - 230 kV Line Rebuild	30000196	2422T1
153	Piedmont to Wekiva - 230 kV Line Rebuild		2471
153	Piedmont - Upgrade 230 kV Equipment to 3000A	30000333	2471S1
153	Piedmont to Wekiva (NLP-3) - 230 kV Line Rebuild	30000335	2471T1
156	Avon Park to Avon Park North - 69 kV Line Rebuild		2093
156	Avon Park - Upgrade 69kV Equipment to 2000A	20093782	2093S1
156	Avon Park-Avon Park North 69 kV Rebuild, 3.69 mi	20087165	2093T1

GLOSSARY OF TERMS:

N/A - means not available because a Work Order Number has not been assigned.

Work Order Number - is also known as a Project ID # that is part of DEF's internal accounting system and considered the primary means to reference a project's status and charges.

DUKE ENERGY FLORIDA, LLC

CWIP PROJECTS

Project Number	Project Name	Work Order Number	THOR Number

THOR Number - means an identifying number that is automatically generated by THOR, a software application developed by DEF for the purpose of managing technical and financial aspects of transmission capital projects from conception to project in-service and work order closing.

Date Prepared: _____

DUKE ENERGY FLORIDA, LLC

Transmission Construction Work in Progress Included in Rate Base
Year Ending 12/31/YYYY

DEF-9 Project Number	Project Name	Work Order Number	THOR Number	Original Planned Date	Original Estimated Cost	Current Status	Current Planned Date	Current System Need Date	Current Estimated Cost	Acct. 107 Beginning Balance	Acct. 107 Ending Balance	Explanatory Comments
(a)	(b)	(c)	(d)	(e)	(f)	(g)	(h)	(i)	(j)	(k)	(l)	(m)
	[List of Projects]											
	Total All Projects											
	Total Excluding Suspended Projects											

General Instructions:

(1) This Exhibit DEF-9A shall be populated with data regarding transmission-related CWIP projects the costs of which FERC has authorized the Company to include in its transmission rate base under this Formula Rate, such authorization resulting from a proceeding under Section 205 or 206 of the Federal Power Act. Such projects are listed in Exhibit DEF-9.

(2) For each such transmission construction project, one row shall be added to the table above and populated with the data regarding that project; provided, however, that projects may be divided into subprojects in circumstances where DEF reasonably determines that such subprojects will not alter or expand in any material fashion the scope of the original project as authorized by the Commission or cause a significant change in project cost due to a change in project scope. The data for the subprojects shall be entered on consecutive rows.

(3) Rows shall be grouped with respect to the FERC proceedings in which inclusion of the projects was authorized, and each such grouping shall be headed with a row identifying the corresponding FERC docket number(s).

Column Contents:

(a) DEF-9 Project Number: Reference to number of the project as shown on DEF-9.

(b) Project Name: Descriptive name or title of the project or subproject.

(c) Work Order Number: Also known as a Project ID # that is part of DEF's internal accounting system and considered the primary means to reference a project's status and charges. "N/A" means a Work Order Number has not been assigned.

(d) THOR Number: An Identifying number that is automatically generated by THOR, a software application developed by DEF for the purpose of managing technical and financial aspects of transmission capital projects from conception to project in-service and work order closing.

(e) Original Planned Date: means the target date that DEF planned to strive to meet for completing construction at the time DEF submitted a filing with FERC for approval of CWIP recovery for the project.

DUKE ENERGY FLORIDA, LLC

Transmission Construction Work in Progress Included in Rate Base
Year Ending 12/31/YYYY

DEF-9 Project Number	Project Name	Work Order Number	THOR Number	Original Planned Date	Original Estimated Cost	Current Status	Current Planned Date	Current System Need Date	Current Estimated Cost	Acct. 107 Beginning Balance	Acct. 107 Ending Balance	Explanatory Comments
(a)	(b)	(c)	(d)	(e)	(f)	(g)	(h)	(i)	(j)	(k)	(l)	(m)

(f) Original Estimated Cost: The estimated total construction cost of the project at the time DEF submitted a filing with FERC for approval of CWIP recovery for the project.

(g) Current Status: either "Completed," "Active," "Suspended," or "Cancelled."
(A) "Completed" means the project is in service and all charges have been collected and recorded in Account 106.
(B) "Active" means the project is under construction and has not been completed, suspended or cancelled.
(C) "Suspended" means the project has been approved for CWIP recovery but is under review and is not eligible for recovery in the transmission formula rate.

(D) "Cancelled" means the project was approved for CWIP recovery but construction of the project has been cancelled.

(h) Current Planned Date: means the most recent target date that DEF intends to strive to meet for completing construction.

(i) Current System Need Date: The date by which DEF most recently determined that the facility would need to be in service to avoid a situation for which there is no post-contingency mitigation.

(j) Current Estimated Cost: The most recently estimated total construction cost of the project.

(k) Acct. 107 Beginning Balance: The total cost of the project as properly recorded in FERC Account 107, as of the beginning of the year.

(l) Acct. 107 Ending Balance: The total cost of the project as properly recorded in FERC Account 107, as of the end of the year.

(m) Explanatory Comments: Any additional information that is necessary or helpful.

Date Prepared: _____

SCHEDULE 10-A.3

Notes for Formula Rate

[DEF Zone]

Section 1 General Instruction

The following notes to the Formula Rate template in Schedule 10-A.2 of the Tariff of the Transmission Provider (also referred to herein as "DEF") shall govern the use and application of the Formula Rate and constitute an integral part of the Formula Rate.

Section 2 Notes

2.1 Order No. 679 Transmission Incentives.

(i) DEF shall not make an Order No. 679 transmission incentives filing for its transmission construction projects during an approximately four-year period of time that extends from the date hereof through December 31, 2011 (the "Order No. 679 Rate Moratorium").[1] DEF shall have the right to file for Order No. 679 transmission incentives for its transmission construction projects that meet the criteria under Section 2.1(ii) below after December 31, 2011, and the Customers reserve the right to oppose any such filing; provided, however, that a condition precedent to any such filing by DEF is that DEF shall have provided written notice to the Customers at least ninety (90) days prior to such filing of DEF's intent to make such filing. Thus, for example, if DEF intends to make such an Order 679 transmission incentives filing on March 1, 2012, it would be required to provide written notice of such filing on or before December 2, 2011, failing which the filing would be a nullity.

(ii) After the Order No. 679 Rate Moratorium expires and provided that

---

[1] *Promoting Transmission Investment through Pricing Reform*, Order No. 679, 71 Fed. Reg. 43,294 (July 31, 2006), FERC Stats. & Regs. ¶ 31,222 (2006), *order on reh'g*, Order No. 679-A, 72 Fed. Reg. 1,152 (January 10, 2007), FERC Stats. & Regs. ¶ 31,236 (2006), *order on reh'g*, 119 FERC ¶ 61,062 (2007). The reference herein to "Order No. 679" includes any order issued by the FERC prior or subsequent to the filing of this Settlement Agreement that pertains to rate incentives of any sort for construction of transmission facilities.

proper advance notice is provided in accordance with Section 2.1(i) above, DEF may file at the Commission for any transmission incentives for its transmission construction projects that are permitted by Order No. 679, except that DEF may not file for transmission incentives for any transmission construction project that has reached a point in development in which costs of the transmission project have begun to be capitalized by DEF (i.e., DEF has begun the accrual of costs for the transmission construction project in Account 107 in accordance with generally accepted accounting practices) during the Order No. 679 Rate Moratorium. DEF may not intentionally delay or defer the accrual of costs for a transmission construction project in Account 107 in order to make a transmission construction project eligible for Order No. 679 transmission incentives.

2.2 50% CWIP Recovery. The Formula Rate includes 50% recovery of the average of the beginning and end-of-year CWIP balances only for those transmission projects identified in the Formula Rate Filing. DEF agrees that the submission for 50% CWIP recovery shall be filed in accordance with the requirements in the Commission's regulations (18 C.F.R. § 35.25(f)) and existing precedent on the issue (including *Northeast Utilities Service Company*, 114 FERC ¶ 61,089 (2006); *Boston Edison Company*, 109 FERC ¶ 61,300 (2004), *order on reh'g*, 111 FERC ¶ 61,266 (2005); and *United Illuminating Company*, Docket Nos. ER05-1049-000 *et al.*, Letter Order). DEF agrees that the submission shall make CWIP showings and waiver requests that are comparable to the showings and waiver requests that were submitted and accepted by the Commission in the aforementioned cases. Consistent with then applicable Commission regulations and precedent, DEF must make a FPA Section 205 filing if it wishes to request 50% CWIP recovery for any additional transmission projects in the future.

2.3 ROE. The Formula Rate shall include a 10.0% rate of return on common equity ("ROE"). DEF and each of the Transmission Customers shall have no FPA Section 205 or 206 rights, respectively, to seek a change to the ROE in the Formula Rate that would become effective prior to January 1, 2023, nor shall DEF or a Transmission Customer make an FPA Section 205 or 206 filing prior to January 1, 2023 to seek a change to the ROE in the Formula Rate. On or after January 1, 2023, DEF and each of the Transmission Customers shall have FPA Section 205 or 206 rights, respectively, to make a filing to seek a change to the ROE in the Formula Rate.

2.4 Storm Damage.

(i) The Formula Rate shall include an accrual to rebuild the wholesale storm reserve balance over a three-year period beginning June 1, 2020, and the accrual shall be calculated in accordance with the methodology included in the Formula Rate. The storm damage reserve accrual is subject to the cap set forth in Section 2.4(ii). The Formula Rate shall include accruals to rebuild the wholesale storm reserve balance until the reserve reaches the desired balance.

(ii) The accrual described in Section 2.4(i) shall be subject to a cap to ensure that there is no over-funding of storm damage reserve funds. Under the cap, the total accruals in each year shall be subject to reduction (and possible reversal to negative amounts) as necessary to avoid over-funding the wholesale portion of the storm damage reserve funds, i.e., in order to maintain the wholesale portion of DEF's storm reserve fund balance at no more than the transmission allocated portion of the $140.1 million maximum storm damage reserve level.

(iii) To ensure that there is no double recovery of the storm damage reserve accrual, the Formula Rate shall exclude the accrual, described in Section 2.4(i), from FERC Account 924 and all other expenses included in the Formula Rate.

(iv) The Formula Rate includes a worksheet that illustrates the methodology for the storm damage recovery described in Section 2.4(i).

2.5 Transmission Divisor.

(i) The transmission load divisor in the Formula Rate shall be determined in the following manner:

(1) For Network Integration Service under the OATT and for transmission services similar to Network Integration Service under the OATT (e.g., DEF's service to its native load and service under certain grandfathered agreements), except those services identified in item (2), the transmission load divisor shall include the actual demands of those transmission customers at the time of DEF's monthly transmission system peaks.

(2) Reserved

(3) For Long-Term Firm Point-to-Point Transmission Service and Conditional Firm Service under the OATT and transmission service similar to Long-Term Firm Point-to-Point Transmission Service or Conditional Firm Service under the OATT (e.g., DEF's service under certain grandfathered agreements), the transmission load divisor shall include the contract demands of those transmission customers at the time of DEF's monthly transmission system peaks.

(4) For Short-Term Firm or Non-Firm Transmission Services under the OATT and transmission service similar to Short-Term Firm or Non-Firm Transmission Services under the OATT (e.g., DEF's service under certain grandfathered agreements), the transmission load divisor shall not include the contract demands of those transmission customers (because revenues from these services are treated as a revenue credit in the Formula Rate, as set forth in Section 2.6(i)(2)).

(5) All values in the transmission load divisor will be adjusted for losses to the transmission system input level based on the transmission loss factor set forth in the OATT.

2.6 Non-Load and Transmission-related Revenue Credits.

(i) The non-load and transmission-related revenue credits in the Formula Rate shall be determined in the following manner:

(1) All revenues associated with facilities allocated to the transmission function, including both direct and indirect allocations (e.g., general and intangible plant and administrative and general expense) shall be treated as revenue credits in the Formula Rate, with the exception that transmission services that are included in the transmission divisor of the Formula Rate, as set forth in Section 2.5, shall not be treated as a revenue credit. Such revenue credits shall include, but shall not be limited to, transmission facilities lease/rental payments, direct assignment facilities charges, pole attachment fees, and general plant-related income.

(2) Transmission revenues from Short-Term Firm and Non-Firm Transmission Services under the OATT and transmission service similar to Short-Term Firm or Non-Firm Transmission Services under the OATT (e.g., DEF's service under certain grandfathered agreements) shall be treated as revenue credits in the Formula Rate.

(3) Transmission services revenues from FERC Account 456 shall be treated as revenue credits in the Formula Rate, but ancillary services revenues from FERC Account 456 shall not be revenue credits in the Formula Rate.

(4) All transmission revenue credits shall be directly assigned to the transmission function in the Formula Rate (i.e., they shall not be allocated in the Formula Rate using a transmission plant allocator).

(5) Revenues associated with indirect allocations of costs to the transmission function (e.g., general and intangible plant) shall be allocated to the transmission function in the Formula Rate based on the same underlying indirect allocations of costs and treated as a revenue credit.

2.7 Average of Beginning and End-of-Year Data: The Formula Rate shall include the average of the beginning and end-of-year balances from DEF's FERC Form No. 1 reports for the rate base items included in the Formula Rate, with the exception that storm damage items shall be included in the Formula Rate in accordance with Section 2.4.

2.8 Cash Working Capital. The Formula Rate shall include cash working capital based on a formulary approach as follows: 1/8 multiplied by the total of operation and maintenance expense, as specified in the Formula Rate template at page 3, line 17.

2.9 Prepayments for Network Upgrades by Generators. The Formula Rate includes treatment of refundable prepayments made by generators for network upgrades. The Formula Rate includes the amount of the refundable prepayments that DEF has not refunded to the OATT transmission customer in credits to the OATT transmission customer's transmission charges as an offset to rate base in the Formula Rate so that DEF will not earn a return on those funds. Correspondingly, the amount of interest paid to OATT transmission customers as their balances are credited against their transmission service is included as an expense in the Formula Rate. The Formula Rate includes a hypothetical example to illustrate how refundable prepayments for network upgrades are treated in the Formula Rate. The Formula Rate includes a placeholder for any future refundable prepayments for network upgrades.

2.10 Credits for Customer-Owned Facilities. The Formula Rate includes a placeholder for any future credits for customer-owned facilities to prevent any under-recovery of revenues by DEF due to any credits provided to OATT transmission customers for their own facilities.

2.11 Transmission Provider's Compliance with Order No. 2003. In accordance with FERC Order No. 2003,[2] the Formula Rate excludes any transmission plant that meets the definition of "Interconnection Facilities" and was placed in service for DEF's own generation facilities after March 15, 2000.

2.12 Directly Assigned or Assignable Costs. The Formula Rate excludes all costs that are properly directly assigned or assignable to one or more particular customers, including costs directly assigned or assignable to DEF.

---

[2] *Standardization of Generator Interconnection Agreements and Procedures*, Order No. 2003, 68 Fed. Reg. 49,846 (August 19, 2003), FERC Stats. & Regs., ¶ 31,146 (2003), *order on reh'g*, Order No. 2003-A, 69 Fed. Reg. 15,932 (March 26, 2004), FERC Stats. & Regs., ¶ 31,160 (2004), *order on reh'g*, Order No. 2003-B, 70 Fed. Reg. 265 (January 4, 2005), FERC Stats. & Regs. ¶ 31,171 (2004), *order on reh'g*, Order No. 2003-C, 70 Fed. Reg. 37, 661 (June 30, 2005), FERC Stats. & Regs. ¶ 31,190 (2005), *aff'd sub nom. Nat'l Ass'n of Regulatory Util. Comm'rs v. FERC*, 475 F.3d 1277 (D.C. Cir. 2007).

2.13 DEF Payments to "Affected Transmission Owners" and Receipts from Others under the Regional Cost Allocation. FRCC regional transmission expansion cost allocation principles are currently under development. Within thirty days after those principles are filed as part of a FERC Order 890 compliance filing, DEF shall submit to Transmission Customers a proposal to address the treatment under the Formula Rate of DEF payments to Affected Transmission Owners, and payments to DEF as an Affected Transmission Owner, under such principles. If the interested Transmission Customers and DEF reach agreement within ninety days, DEF shall make a filing, pursuant to FPA Section 205, to change the Formula Rate to properly account for such payments. If the interested Transmission Customers and DEF do not reach agreement within ninety days, DEF shall make a filing, pursuant to FPA Section 205, to change the Formula Rate to properly account for such payments, and such filing may be opposed by affected parties. DEF's FPA Section 205 filing to implement the FRCC regional transmission expansion cost allocation principles into the Formula Rate shall be limited to that subject matter and any Transmission Customer opposition to said FPA Section 205 filing shall be limited to disputes as to how to implement the FRCC regional transmission expansion cost allocation principles into the Formula Rate. To the extent necessary, DEF's said Section 205 filing may receive a retroactive effective date to permit DEF to recover costs resulting from the FRCC regional transmission expansion cost allocation principles.

2.14 Accumulated Deferred Income Taxes (ADIT).

The Formula Rate provides for the inclusion of transmission-related ADIT in the rate base. ADIT items unrelated to transmission shall not be allocated to transmission. In each Annual Update (as defined in the Formula Rate Implementation Protocols), DEF shall provide a spreadsheet that identifies the transmission-related costs in the FERC Form No. 1 reported

amounts for ADIT. For example, the following ADIT items are not included in the Formula Rate because they are not transmission-related ADIT:

(i) Income tax deficiency items in ADIT (e.g., Accounts 190 and 283) are assigned to "other" in the Formula Rate.

(ii) Deferred taxes related to Environmental Cleanup Reserve in ADIT are allocated on the basis of gross plant in the Formula Rate.

(iii) Pension-related taxes, referred to as "Prepaid Pension – per book" and "Reg Asset – Minimum Pension Liab," in Account 283 are excluded from rate base in the Formula Rate and, accordingly, there shall be no ADIT balance offset for these items.

2.15 Intangible Plant.

(i) The Formula Rate includes the treatment of intangible plant.

(ii) In future Annual Updates, DEF shall provide supporting information concerning gross intangible plant investment and associated depreciation in order to establish net intangible plant investments so that OATT transmission customers may compare DEF's net intangible plant investments from year to year.

(iii) To the extent that the net intangible plant investment increases from one year to the next, DEF shall supply, in the Annual Update, the supporting information to explain the increase and DEF shall adjust the allocation of net intangible plant investment in the Formula Rate to the extent necessary to reflect an appropriate allocation to transmission. This adjustment shall be submitted by DEF to the Commission in DEF's Annual Informational Filing for the Commission's acceptance. If there is a disagreement between DEF and a transmission customer concerning this matter, such matter shall be resolved through a Preliminary Challenge and/or

Formal Challenge under the Formula Rate Implementation Protocols (rather than through an FPA Section 206 complaint).

2.16 Prepaid Pension Expense and Other Prepayments.

(i) The Formula Rate shall exclude prepaid pension expenses from rate base.

(ii) To the extent that prepaid pension expenses increase in a given year, DEF shall in the Annual Update provide supporting information for, and shall adjust the allocation of prepaid expenses, to the extent necessary to reflect an appropriate allocation to transmission. This adjustment shall be submitted by DEF to the Commission in DEF's Annual Informational Filing for the Commission's acceptance. If there is a disagreement between DEF and a transmission customer concerning this matter, such matter shall be resolved through a Preliminary Challenge and/or Formal Challenge under the Formula Rate Implementation Protocols (rather than through an FPA Section 206 complaint).

2.17 Extraordinary Property Loss. If an event meets the requirements for treatment as an Extraordinary Property Loss (FERC Account 182.1), DEF shall seek Commission approval for such treatment, with charges amortized over 3 to 5 years, as appropriate under the circumstances.

2.18 Extraordinary Transmission O&M Expenses. O&M expenses allocated or assigned to the transmission function that are extraordinary and non-recurring and have a significant effect on charges shall be amortized in the Formula Rate over three to five years (subject to Commission approval), as appropriate under the circumstances. The Formula Rate shall include the unamortized balance in rate base.

2.19 Property Taxes. Property taxes shall be allocated in the Formula Rate using the gross plant allocator.

2.20 Property Insurance. After deducting the annual funding of self-insurance for storm damage, property insurance shall be allocated in the Formula Rate using the gross plant allocator.

2.21 DEF Power Marketing Costs.

(i) To the extent that any labor costs associated with DEF's power marketing operations are included in administrative and general ("A&G") expense accounts, those labor costs shall be excluded from the A&G expenses to be allocated in the Formula Rate.

(ii) The divisor of the labor allocator in the Formula Rate shall include any such labor costs associated with DEF's power marketing operations.

2.22 FERC Account 561.

(i) Consistent with Order No. 668, the Formula Rate reflects the appropriate treatment of the series of sub-accounts under Account 561 such that the Formula Rate includes

only those items associated with transmission service and excludes all other costs, such as costs properly chargeable to Schedule 1 – Load Control and Dispatch Service.

(ii) The Formula Rate Filing does not change DEF's existing filed rate for Schedule 1 – Load Control and Dispatch Service in the Tariff.

2.23 Asset Retirement Obligations. The Formula Rate shall not include asset retirement obligations in any plant investment.

2.24 A&G Expenses. The Formula Rate shall exclude industry association dues, research and development fees, and Manufactured Gas Plant expense from administrative and general expenses recovered in the Formula Rate.

2.25 Service Company Tax Allocations. Operations and maintenance expenses (including, but not limited to, administrative and general expenses) to be recovered through the Formula Rate shall not include allocations of service company taxes.

SCHEDULE 10-A.4

Accounting for CWIP in Rate Base—OATT Administration

1.0 OVERVIEW

Duke Energy Florida, Inc. ("DEF"), obtains recovery of 50% of its construction work in progress ("CWIP") costs associated with certain identified and FERC-approved transmission projects in its formula transmission rate ("Formula Rate") for Open Access Transmission Tariff ("OATT") service, rather than accruing those costs in DEF's Allowance for Funds Used During Construction ("AFUDC").

2.0 PROCESS

In order to reflect the inclusion of 50% of CWIP in rate base, DEF records in a separate general ledger account an amount to offset half of the wholesale portion of AFUDC booked on the specified transmission projects. This separate account includes an offset to rate base in the OATT revenue requirement calculation. In addition, this separate account is amortized over the average life of the projects to which it relates and includes an offset to depreciation expense in the OATT revenue requirement.

DEF's utility plant accounting system, called PowerPlant, requires that every work order be assigned to a work order type and an operating unit. All transmission work orders are segregated into a transmission depreciation group work order type and are coded with a transmission operating unit. This allows DEF to specifically track transmission projects by type and operating unit prior to their being placed in service and assigned to the appropriate account in FERC's Uniform System of Accounts.

As part of each monthly closing process, the Property, Plant & Materials Department queries PowerPlant for the amount of AFUDC booked to transmission work orders associated with the certain identified transmission projects. A calculation is made to determine 50% of this amount. DEF books a journal entry to a separate general ledger account to reflect that AFUDC is being reflected at the 50% level for the purpose of calculating OATT rates.

In addition, depreciation expense is reduced for purposes of calculating the OATT rates to reflect the fact that 50% of CWIP is being reflected in rate base. DEF books a journal entry amortizing the balance of AFUDC offsets relating to the identified transmission projects utilizing the same depreciation rate applied to the plant balances in the transmission FERC accounts.

3.0 ACCOUNTING

DEF utilizes the contra-asset method. While both the asset and contra-asset balances are maintained in the same FERC account (e.g. Accounts 107 and 101), DEF's detail property records maintain a separate accounting for each item.

As AFUDC is capitalized, Account 107 (CWIP) is debited and the debt and equity portions are credited to 419.1 (Allowance for Other Funds Used During Construction) and 432 (Allowance for Borrowed Funds Used During Construction--Credit). The reversal of AFUDC associated with the wholesale portion of CWIP included in rate base is credited to a Contra-Asset Account (107) and debited to 419.1 and 432 as originally charged.

When the project goes into service, the balance in CWIP (107) and the Contra-Asset Account (107) are moved to Electric Plant in Service (101) and an associated Contra-Asset Account (101). Each of these accounts are depreciated or amortized over the life of the asset.

SCHEDULE 10-B

NETWORK INTEGRATION TRANSMISSION SERVICE

FORMULA RATE FOR DETERMINATION OF ANNUAL TRANSMISSION REVENUE REQUIREMENT AND SCHEDULE 1 ANNUAL REVENUE REQUIREMENT

[DEC Zone]

This Schedule contains the Formula Rate that the Transmission Provider will use to determine its Annual Transmission Revenue Requirement and its Schedule 1 Annual Revenue Requirement (together, "Formula Rates"), and the implementation protocols for the Formula Rates ("Formula Rate Implementation Protocols"). The Formula Rate Implementation Protocols are included as Exhibit A to this Schedule, and apply to the Transmission Provider's calculation of its Annual Transmission Revenue Requirement and its Schedule 1 Annual Revenue Requirement. The Formula Rate for the Transmission Provider's Annual Transmission Revenue Requirement is included in Exhibit B to this Schedule, and shall be used to calculate the Transmission Provider's charges under Schedule 7 and Attachment H of this Tariff. The Formula Rate for the Transmission Provider's Schedule 1 Annual Revenue Requirement is included in Exhibit B to this Schedule, and shall be used to calculate the Transmission Provider's charges under Schedule 1 of this Tariff.

EXHIBIT A TO SCHEDULE 10-B
DUKE ENERGY CAROLINAS FORMULA RATE
IMPLEMENTATION PROTOCOLS

Section 1: General

a) **Formula Rates**.[1] Duke Energy Carolinas employs a Formula to calculate its base transmission rates (for Network Integration Transmission Service and Point-to-Point Transmission Service) and a Formula to calculate its rates for Schedule 1-Scheduling, System Control and Dispatch Service ("Schedule 1 Service"), which rates are recalculated annually, based on calendar year costs, by means of the Formulas[2], in accordance with the Protocols set forth herein. The Formula, the Formula Rate Principles, and these Protocols together comprise the filed rate ("Formula Rate") of Duke Energy Carolinas. Each year Duke Energy Carolinas prepares an Annual Update that trues up the transmission rates calculation by populating the Formula Rate with information from Duke Energy Carolinas' Federal Energy Regulatory Commission ("FERC" or the "Commission") Form No. 1 and its books and records for the preceding calendar year and prepares Estimated Billing Rates for the next Billing Year. Duke Energy Carolinas provides on the last page of these Protocols a time-line/chart illustrating the preparation of the Annual Update, the true-up, and the Estimated Billing Rates. The Annual Update process does not effect change to the Formula Rate itself.

b) **Changes in Rates**. Provisions of the Formula Rate may not be changed by Duke Energy Carolinas except through an appropriate filing pursuant to Section 205 of the Federal Power Act ("FPA") and FERC's regulations thereunder. Provisions of the Formula Rate may not be changed by any other party except pursuant to an order of FERC issued under Section 206 of the FPA. However, Duke Energy Carolinas may, at its discretion and at a time of its choosing, make a limited filing pursuant to FPA Section 205 to update the references in the Formula Rate to reflect any FERC changes to the format and/or content of the FERC Form No. 1 or the Uniform System of Accounts ("USoA") that affect the calculations set forth in the Formula Rate. The sole issue in any such limited Section 205 filing shall be whether such proposed changes appropriately reflect the changes to the format and/or content of the FERC Form No. 1 or the USoA and whether such changes are just and reasonable, and shall not include other aspects of the Formula Rate.

---

[1] The descriptive headings of the various Sections and subsections of these Protocols have been inserted for convenience of reference only and in no way shall be deemed to modify or restrict any of the terms or provisions hereof.

[2] Hereafter in these Protocols the term "Formula" is used to refer respectively to the Formula used to calculate base transmission rates (for Network Integration Transmission Service and Point-to-Point Transmission Service) and the Formula used to calculate rates for Schedule 1-Scheduling, System Control and Dispatch Service.

c) **Stated Values**. Values included in the Formula Rate (if any) for the following items (hereinafter, "Stated Values") may not be changed by Duke Energy Carolinas except through a full rate case filing pursuant to FPA Section 205 or by any other party except pursuant to an order of FERC issued under Section 206 of the FPA:[3]

(i) rate of return on common equity;

(ii) cap on equity component of capital structure;

(iii) the depreciation and/or amortization rates as set forth in the notes to the Formula Rate template, and composite rate methods;

(iv) amortization of extraordinary property losses;

(v) abandoned plant costs;

(vi) transmission incentives;

(vii) construction work in progress;

(viii) GridSouth costs and amortization; and

(ix) revenue-related tax factor. [4]

d) **Fundamental Predicates**. The Formula Rate is premised upon data reported or recorded by Duke Energy Carolinas consistent with the following predicates ("Fundamental Predicates"):

(i) FERC's USoA,

(ii) applicable FERC Form No. 1 reporting requirements,

(iii) FERC's policies governing formula rates for wholesale transmission service, including FERC's policies that all charges billed under formula rates are subject to: (A) challenge on grounds of imprudence, and (B) an order by FERC requiring after-the-fact refunds.

(iv) FERC orders establishing transmission ratemaking policies of general application to transmission-owning public utilities, including Duke Energy Carolinas; and

(v) the accounting and cost allocation policies, practices and procedures of Duke Energy Carolinas to the extent consistent with the authorities listed in (i) through (iv) above.

---

[3] The initial Stated Values for amortization of extraordinary property losses, abandoned plant costs, transmission incentives and construction work in progress will be $0. Duke is required to make a full rate case filing under Section 205 of the Federal Power Act to change these Stated Values.

[4] The initial Stated Values for revenue-related tax factor is will be 1. Duke is required to make a full rate case filing under Section 205 of the Federal Power Act to change this Stated Value.

The Formula Rate is based upon each of these Fundamental Predicates as it existed as of the date these Protocols are filed with FERC. Provisions of the Formula Rate may be modified to conform to changes in these Fundamental Predicates in accordance with Sections 1(b) or 3(c) of these Protocols or as ordered by FERC.

e) **Year, Billing Year**. Unless otherwise indicated, the term "year" in these Protocols means a calendar year starting January 1 and ending December 31. The term "Billing Year" means the period starting June 1 and ending May 31.

f) **Interest Rate**. The interest rate for all interest calculations provided for under these Protocols shall be the FERC interest rate on refunds set forth in 18 C.F.R. § 35.19a(a)(2)(iii)(A).

Section 2: Annual Update Process

a) **General**. On or before May 15 of each year, Duke Energy Carolinas shall

(i) recalculate its Annual Transmission Revenue Requirement and its Annual Revenue Requirement for Schedule 1 services for the preceding year (both of which are encompassed by the term "ATRR," as used herein) by populating the Formula Rate with information from Duke Energy Carolinas' FERC Form No. 1 and its books and records for the preceding calendar year ("Annual Update"),

(ii) post each such Annual Update on its website via link to the public portion of its OASIS website,

(iii) submit such Annual Update to FERC as an informational filing,

(iv) perform a true-up of the rates for the immediately preceding year as set forth in Section 2 (h), and

(v) establish Estimated Billing Rates for the immediately succeeding Billing Year as set forth in Section 2 (i).

b) **Service on Customers**. On the Publication Date, Duke Energy Carolinas will electronically serve on each network transmission customer and each transmission customer that takes point-to-point service under the Tariff pursuant to a contract of one year or longer in duration (collectively "Customers") the following: (i) a "workable," fully-functioning electronic spreadsheet containing that year's Annual Update input data; (ii) transmission load data for the preceding year, showing monthly coincident and non-coincident peak transmission loads for each Customer and other users of the Duke Energy Carolinas transmission system (including company loads); and (iii) a specification of the monthly transmission loads used in developing the updated rate divisor, and an explanation of any adjustments made to the transmission load data in deriving that divisor.

c) **Informational Filing**. The informational filing with FERC is not intended to be subject to FERC's notice requirements, but any such lack of notice does not limit FERC's authority to initiate a proceeding on its own motion. If FERC does issue a

notice of the informational filing, Duke Energy Carolinas shall advise FERC of the challenge process in the Protocols and shall request an abeyance of the noticed FERC proceeding to permit the Protocol challenge process to proceed.

d) **Next Business Day**. If the date for making the Annual Update posting/filing should fall on a weekend or a holiday recognized by the FERC, then the posting/filing shall be due on the next business day.

e) **Publication Date**. The date on which the last of the events listed in Section 2.a (i) - (iii) occurs shall be that year's "Publication Date."

f) **Annual Update**. The Annual Update for the year:

(i) shall be based upon data properly recordable and correctly recorded in Duke Energy Carolinas' FERC Form No. 1 for the most recent year, and upon the books and records of Duke Energy Carolinas, consistent with FERC accounting policies and FERC's USoA;

(ii) shall, to the extent specified in the Formula Rate, provide supporting documentation for data not otherwise available in the FERC Form No. 1 that are used in the Formula Rate;[5]

(iii) shall identify any changes in (1) FERC's USoA; (2) FERC Form No. 1 reporting requirements as applicable;[6] and/or (3) Duke Energy Carolinas' accounting policies and practices and procedures, to the extent that such changes have occurred since the posting of the most recent Annual Update, and have a material effect, singularly or in the aggregate, on an annualized basis on the determination of any value(s) included in the Formula Rate or the calculation of the Annual Update, as applicable;

(iv) shall be subject to challenge and review only in accordance with the procedures set forth in these Protocols; and

(v) shall not result in modifications to the Formula Rate.

g) **Projection**. The Annual Update shall include a budgetary projection, broken out on an annual basis, of total transmission plant anticipated to be placed in service over each of the next three years and shall include disclosure of any projected costs associated with Smart Grid activities, including transmission equipment, software, hardware, and operations and maintenance expenses. Such projection

---

5 Each input to the Formula Rate will be either taken directly from the FERC Form No. 1 or reconcilable to the FERC Form No. 1 by the application of clearly identified and supported information.

6 If the referenced form is superseded, the successor form(s) shall be utilized and supplemented as necessary to provide equivalent information as that provided in the superseded form. If the referenced form(s) is (are) discontinued, equivalent information as that provided in the discontinued form(s) shall be utilized.

shall be based upon Duke Energy Carolinas' then-current estimate of future expenditures but shall not otherwise be binding on Duke Energy Carolinas in any way. For each project with an estimated cost at or above $5 million, Duke Energy Carolinas shall provide identification of: (1) the name and description of each such project; (2) the anticipated project completion date; (3) identification of the transmission constraint, reliability concern or criteria violation that the project is intended to relieve or avoid; and (4) the expected expenditure on each such project, by year for the three-year period.

h) **True-Up**. As part of the Annual Update process,

(i) Duke Energy Carolinas will calculate separate True-Up Amounts for Network Integration Transmission Service, Point-to-Point Transmission Service, and Schedule 1 Service. Each True-Up Amount shall be equal to the difference between (1) the amount of revenue that Duke Energy Carolinas collected[7] from its Network Integration Transmission Service customers, Point-to-Point Transmission Service customers, or Schedule 1 Service customers, as applicable, during the immediately preceding calendar year[8] and (2) the amount of revenue that Duke Energy Carolinas would have collected from such customers under the actual ATRR and transmission rates as calculated pursuant to the Annual Update.

(ii) Each annual True-Up Amount will be spread evenly over the calendar year to which the True-Up Amount relates. Thus, each True-Up Amount is divided by 12 and interest is applied to the twelve monthly balances for such calendar year for the appropriate number of months until June 1 of the year in which the Annual Update is performed.

(iii) An equal monthly amount is then calculated that will recover each True-Up Amount, plus accrued interest until June 1 as calculated pursuant to subsection (ii), plus interest that will accrue over the next Billing Year (June 1 to May 31). The sum of these 12 monthly amounts ("True-Up Amount With Interest") is then divided by the load ratio share percentage for the immediately preceding year and the result is added to (or subtracted from) the ATRR which will be the basis for Estimated Billing Rates for the immediately subsequent Billing Year.

(iv) The Formula Rate contains calculations of a True-Up Amount With Interest for Network Integration Transmission Service and for Schedule 1

---

[7] Excluding any component of Estimated Billing Rates which is due to the inclusion of the True-Up Amount With Interest from the preceding year in the ATRR.

[8] For the calculation of the first True-Up Amount, if the Formula Rates were not in effect for the entire preceding calendar year, then the calculation shall be performed for the part of the year for which the Formula Rates were in effect and all amounts shall be prorated as appropriate.

Service.

i) **Estimated Billing Rates**. No later than May 15 of each year, Duke Energy Carolinas shall prepare estimated billing rates ("Estimated Billing Rates") for the next Billing Year.[9] Duke Energy Carolinas shall post such Estimated Billing Rates on its website via link to the public portion of its OASIS and shall submit such Estimated Billing Rates and supporting information to the FERC in an informational filing.[10] If the date for making such posting should fall on a weekend or a holiday recognized by the FERC, then the posting shall be made on the next business day. Estimated Billing Rates shall be based upon values determined in accordance with these Protocols and the following:

(i) for rate base components (other than prepayments) reflected in the ATRR, the end-of-year plant balances for the preceding calendar year;

(ii) for prepayments reflected in the ATRR, the average of the end-of-month balances over the 13 month period ending with the last month of the preceding calendar year; and

(iii) for expense components reflected in the ATRR, the actual historical expenses for the preceding calendar year.

The foregoing values shall be determined during the Annual Update process using as-recorded data; provided, however, that the values described in this subparagraph (i) will be adjusted for the True-Up With Interest as described in Section 2(h)(iii) above and may further be adjusted by Duke Energy Carolinas in its reasonable discretion for capital additions projected to be made during the Billing Year, such adjustment (if made) to be based on the projected total capital additions expenditures for that period. During the Billing Year, Duke Energy Carolinas shall bill and the Customers shall pay for transmission service based on the Estimated Billing Rates.

j) **Real Power Loss Factor**. Beginning with the 2019 Billing Year (for services provided on and after June 1, 2019), the annual update of the Real Power Loss factor shall be governed by this Section 2(j). Duke Energy Carolinas shall recalculate the Real Power Loss factor in accordance with the Methodology for Calculation of Real Power Loss Factors set forth in Attachment W (the "Methodology"). By April 1 of the year immediately succeeding the 12-month loss factor calculation period set forth in the Methodology, Duke Energy Carolinas shall post on its website via link to the public portion of its OASIS website (the "Real Power Loss Factor Posting") and shall electronically serve on

---

[9] Except that the initial Billing Year shall commence on the date that the Formula Rate becomes effective and shall terminate on the immediately subsequent May 31

[10] For the initial year in which the Formula Rate is effective, Duke Energy Carolinas shall prepare and post the Estimated Billing Rates no later than fifteen days prior to date that the Formula Rate becomes effective.

each Customer the recalculated Real Power Loss factor along with supporting calculations and documentation, in a workable Excel file, in sufficient detail to enable customers to verify the accuracy of the recalculated Real Power Loss factor. The recalculated Real Power Loss factor shall be a component of and shall be incorporated into the Annual Update for all purposes under these Formula Rate Implementation Protocols, except as follows:

(i) Any Customer may serve information requests regarding the recalculation of the Real Power Loss factor commencing with the Real Power Loss Factor Posting.

(ii) Notwithstanding Sections 2(h), the recalculated Real Power Loss factor shall be effective June 1 following the Real Power Loss Factor Posting and shall not be included in the true up of the rates for the previous calendar year.

An example to illustrate the intended operation of this Section 2(j) follows. Suppose that the recalculation of the Real Power Loss factor is posted by April 1 of year 2 and that the Real Power Loss factor is recalculated from 0.25% to 0.22%. The Real Power Loss factor will be 0.22% effective June 1 of year 2. The Real Power Loss factor of 0.22% will be incorporated into the Annual Update posted in May of year 2 for the purpose of calculating estimated billing rates under Section 2(i), but will not be incorporated into the Annual Update for the purpose of truing up rates for year 1 under Section 2(h). When the rates are recalculated in the Annual Update performed in May of year 3, the Real Power Loss factors used for the true-up of the rates in year 2 will be 0.25% from January 1 through May 31, and 0.22% from June 1 through December 31.

Section 3: Annual Review Procedures

Each Annual Update shall be subject to the following review procedures ("Annual Review Procedures"):

a) **Customer Meeting**. With the posting of the Annual Update, Duke Energy Carolinas shall provide notice to Customers that an open Customer meeting will be held, on a date specified in the notice that shall be no earlier than ten (10) business days from the date of posting of the Annual Update and no later than June 15, to discuss the Annual Update ("Customer Meeting"). Duke Energy Carolinas shall provide the opportunity for participation by telephone conference at this Customer Meeting. At the Customer Meeting, Duke Energy Carolinas shall provide

(i) an overview of the Annual Update, including, on an informal (*i.e.*, non-binding) basis, information about the updated inputs to the Formula Rate, and including, without limitation, a summary sheet that shows the expiring Estimated Billing Rates for transmission service in $/MW-Month, the

true-up of that rate, and an item-by-item description of the factors that contribute in any material way to the true-up of that rate, referencing the page and line of the Formula Rate template and associated dollar amount of the change and the rate impact of the change;

(ii) an opportunity to discuss the factors that contribute in any material way to the true-up of the rate;

b) **Preliminary Challenges**. Unless the period is extended with the written consent of Duke Energy Carolinas or is extended as provided for in section 3(e) of these Protocols to resolve discovery disputes, a Customer shall have up to 120 days after the Publication Date ("Review Period") to review the calculations and to notify Duke Energy Carolinas in writing of:

(i) any challenge to the Annual Update (or any portion thereof) or the application of the Formula Rate, or

(ii) any specific challenge based on

(A) changes in the Fundamental Predicates reflected in items (i) through (v) as set forth in Section 1(d) above that may produce changes in the rates and charges produced from the application of the Formula Rate subsequent to such change; and/or

(B) the prudence of any costs included in the Annual Update.

A challenge raised on the basis of any of the foregoing grounds shall be referred to as a "Preliminary Challenge."

c) **Changes to Fundamental Predicates**. All change(s) to the Fundamental Predicates (other than through filings pursuant to Section 1 (b) of these Protocols that update FERC Form 1 references and do not make substantive changes to the Formula Rate), subsequent to the date specified in Section 1(d), shall warrant a re-assessment of all of the elements of the Formula Rate that are affected by the change or changes in one or more Fundamental Predicates to ensure that the Formula Rate operates together to produce a just, reasonable and not unduly discriminatory or preferential Formula Rate. If there is a change to the Fundamental Predicates that requires a change to the Formula Rate to ensure that the Formula Rate operates to produce a just, reasonable and not unduly discriminatory or preferential Formula Rate, Duke Energy Carolinas will effectuate the change in the Formula Rate through a filing under Federal Power Act Section 205.

d) **Information Requests**. Unless such period is extended with the written consent of Duke Energy Carolinas or is extended as provided for in section 3.e of these Protocols to resolve discovery disputes, any Customer shall have up to 90 days after each annual Publication Date to serve reasonable information requests on Duke Energy Carolinas. Such information requests shall be limited to what is reasonably necessary to determine

(i) whether Duke Energy Carolinas has calculated the Annual Update under review properly and in accordance with these Protocols;

(ii) whether Duke Energy Carolinas has applied the Formula Rate according to its terms, including the procedures in these Protocols;

(iii) whether the costs included in the Annual Update are properly accounted for (*e.g.*, recordable and recorded in the appropriate accounts) under FERC's USoA and otherwise consistent with Duke Energy Carolinas' accounting policies, practices, or procedures;

(iv) whether the costs are prudent; and

(v) whether accounting changes or changes in the USoA or in the requirements and contents of the FERC Form No. 1 have affected application of the Formula Rate, and if so, whether the effect of those changes has been properly reflected in the Annual Update.

Such information requests shall not solicit information that solely relates to inputs that are Stated Values or cost allocation methods that have been determined by any final order by the FERC pursuant to FPA Sections 205, 206 or 306 with respect to Duke Energy Carolinas (including an order approving a settlement), except that such information requests shall be permitted if they seek to determine whether there have been material changed circumstances and to confirm consistency with the applicable order (and associated settlement, if any).

e) **Response Period**. Duke Energy Carolinas shall respond to information requests pertaining to the Annual Update within 15 business days of receipt of such requests unless impracticable, in which case, Duke Energy Carolinas shall, within such 15-day period, notify the party requesting information of the delay and provide an estimated date for the responses.

f) **Discovery Master**. To the extent Duke Energy Carolinas and any Customer are unable to resolve disputes related to information requests submitted in accordance with these Annual Review Procedures, Duke Energy Carolinas or any Customer may petition the FERC to appoint an Administrative Law Judge as a discovery master. The discovery master shall have the power to issue binding orders to resolve discovery disputes and compel the production of discovery, as appropriate, in accordance with the Annual Review Procedures and consistent with the FERC's discovery rules; provided, however, that the Review Period set forth in section 3.b of these Protocols and the period for discovery provided for in section 3.d of these Protocols will be tolled during the pendency of any discovery dispute submitted to the discovery master, such tolling period to end ten business days after the date on which the order issued by the discovery master provides for resolution of the discovery dispute pursuant to this subsection.

g) **Use of Information**. All information and correspondence produced pursuant to these Protocols may be included in any Preliminary or Formal Challenge, in any other proceeding concerning the Formula Rate initiated at FERC pursuant to the FPA, or in any proceeding before a U.S. Court of Appeals to review a FERC decision.

h) **No Implied Limitations on FPA Rights; Standard of Review**. Except as specifically set forth in these Protocols, these Protocols in no way limit the rights

of Duke Energy Carolinas or any Customer to initiate a proceeding at FERC at any time with respect to the Formula Rate, any Stated Value or any Annual Update consistent with the party's full rights under the Federal Power Act, including Sections 205, 206 and 306, and FERC's regulations. In any proceeding initiated *sua sponte* by the Commission or by a party or parties (other than Duke Energy Carolinas) seeking to modify any portion of the Formula Rate or Stated Value in any respect, the party seeking such modification shall bear the burden of proving that the portion of the Formula Rate or Stated Value that the party seeks to change is no longer just and reasonable without such modification and that the proposed modification is just and reasonable. In any proceeding initiated by Duke Energy Carolinas seeking to modify any portion of the Formula Rate or Stated Value in any respect, Duke Energy Carolinas shall bear the burden of proving that the proposed modification is just and reasonable. Duke shall make a Section 205 filing to terminate recovery of GridSouth costs and eliminate the Stated Value for GridSouth from the Formula Rate effective as of the last day of the applicable amortization period (*i.e.*, the period underlying the annual amortization amounts that are the initial Stated Values for this item), and such filing by Duke Energy Carolinas shall be subject to the just and reasonable standard of review.

Section 4: Resolution of Challenges

a) **Challenge in Writing**. A party wishing to raise a Preliminary Challenge with Duke Energy Carolinas (hereinafter, "Challenging Party") shall submit its challenge in writing to Duke Energy Carolinas.

b) **Duke Questions**. Duke Energy Carolinas shall have the right to ask the Challenging Party questions about the Preliminary Challenge. Such questions shall be submitted to the Challenging Party within ten (10) days after receiving the Preliminary Challenge, and responses shall be due ten (10) days after that.

c) **Response to Challenge**. Within fifteen (15) days after receiving such Preliminary Challenge or after receiving responses to questions pursuant to Section 4.b, Duke Energy Carolinas shall provide a written response to the Challenging Party. Such written response shall state whether Duke Energy Carolinas agrees or disagrees with the position raised by the Challenging Party, and what, if any, modifications to the Annual Update Duke Energy Carolina agrees to make in order to resolve the Preliminary Challenge. If Duke Energy Carolinas disagrees with the Preliminary Challenge, it shall include in its written response a statement of its position and any documentation that Duke Energy Carolinas believes supports its position.

d) **Customer Questions**. The Challenging Party shall have the right to ask Duke Energy Carolinas questions about its response provided pursuant to Section 4.c. Such questions shall be submitted to Duke Energy Carolinas within ten (10) days after receiving Duke's response to the Preliminary Challenge, and Duke's

responses to those questions shall be due ten (10) days after that.

e) **Formal Challenge**. If Duke Energy Carolinas and a Challenging Party have not resolved a Preliminary Challenge to an Annual Update within 30 days after receipt of Duke Energy Carolinas' written response to the Preliminary Challenge or, if applicable, its responses to questions regarding its written response, the Challenging Party shall have the right to make a Formal Challenge with the FERC, which shall be served on Duke Energy Carolinas by electronic service on the date of such filing. However, there shall be no need to make a Formal Challenge or to await conclusion of the time periods in Section 3 and 4 if the FERC already has initiated *sua sponte* a proceeding to consider the Annual Update.

f) **Burden of Proof**. In any proceeding initiated by the FERC concerning the Annual Update or in response to a Formal Challenge, Duke Energy Carolinas shall bear the burden of proving that it has properly calculated the challenged Annual Update and reasonably applied the terms of the Formula Rate for that year's Annual Update (including, but not limited to, consistency with the Fundamental Predicates); and of demonstrating that it has reasonably adopted and applied a change in Duke Energy Carolinas' accounting policies, practices or procedures; provided, however, that challenges to the prudency of costs shall be subject to the then-existing criteria and evidentiary burdens established in FERC policy applicable to prudence challenges in a section 205 context.

g) **No Implied Limitation on FPA Rights**. Nothing herein shall be deemed to limit in any way (i) the right of Duke Energy Carolinas to file unilaterally, pursuant to FPA Section 205 and FERC's regulations thereunder, to change the Formula Rate or any of its inputs (including, but not limited to, Stated Values or to replace the Formula Rate with a stated rate; or (ii) the right of any Customer to request changes to the Formula Rate pursuant to FPA Section 206 and FERC's regulations thereunder.

h) **Adjustments to True-Up Amount and Estimated Billing Rates**. The initiation of a Preliminary Challenge or a Formal Challenge will not obligate Duke Energy Carolinas to adjust either the True-Up Amount or the Estimated Billing Rates. However, resolution of Preliminary or Formal Challenges may necessitate adjustments to the Formula Rate input data for the applicable Annual Update as set forth in Section 5(c).

i) **Formula Rate Changes Due to Changes in Fundamental Predicates**. If the application of the Formula Rate in light of any change to any of the Fundamental Predicates is found by FERC to be unjust, unreasonable, and/or unduly discriminatory or preferential, then the calculation of costs incurred during the year then under review, and any subsequent years, and associated True-Ups, shall not include such change, and shall include any such other remedy prescribed by FERC, including adjustments to the Formula Rate to ensure that the Formula Rate continues to operate in a manner that is just, reasonable, and not unduly discriminatory or preferential.

Section 5: Corrections and Changes Pursuant to Annual Update Process

a) **Corrections to Annual Update**. If Duke Energy Carolinas determines or concedes that corrections to the Annual Update are appropriate, Duke Energy Carolinas shall promptly notify the Customers, file a correction to the Annual Update with FERC as an amended informational filing and post the correction on its OASIS.

b) **Review of Corrections**. Interested parties shall have the right to review and challenge the corrections. The performance dates under Sections 3 and 4 of these Protocols shall apply to review and challenge, except that these dates shall run from the posting date(s) for each of the corrections. The scope of review and challenge shall be limited to the portions of the Annual Update affected by the corrections.

c) **Adjustments to True-Up Amount and Estimated Billing Rates**. Any increase or decrease in the ATRR that results from one of the following events shall be reflected as an increase or reduction in the True-Up Amount and the Estimated Billing Rates (with applicable interest) commencing within thirty (30) days following a determination of the need for the adjustment or such later date as FERC may direct: (i) revisions to Duke Energy Carolinas' accounting and reporting of its costs to correct errors; and/or (ii) revisions to Duke Energy Carolinas' accounting and reporting of its costs to reflect the resolution of Preliminary Challenges or Formal Challenges by FERC order or by settlement or as the result of any FERC proceeding to consider the Annual Update.

d) Survival of Protocols. In the event Duke Energy Carolinas seeks to replace the Formula Rate with stated rates in a Section 205 filing, the provisions of these Protocols, including the obligation to true-up the ATRR, shall remain applicable notwithstanding FERC's acceptance of the stated rate filing for as long as necessary to ensure that any over/under recoveries required to accommodate the final True-Up for the last effective Billing Year under the Formula Rate can be refunded/surcharged.

(e) Service of 205 Actions. Duke Energy Carolinas shall electronically serve any filing, including unlocked and non-read only (*i.e.*, manipulable and with the formulas intact) versions of any supporting spreadsheets, in which Duke Energy Carolinas seeks to modify the Formula Rate, or to adopt a stated rate, on all Customers and on all affected state commissions.

RATE IMPLEMENTATION TIMELINE

2011	Jan	Feb	Mar	Apr	May	Jun	Jul	Aug	Sep	Oct	Nov	Dec
					File Estimated Billing Rates May 15	**Begin billing June 1**						
						Billing Year 2011-2012						
						Estimated Billing Rates = Estimated based on 2010 calendar year actuals + estimated						
						2011 capital additions						

2012	Jan	Feb	Mar	Apr	May	Jun	Jul	Aug	Sep	Oct	Nov	Dec
					File ATRR & Estimated Billing Rates May 15	**Begin billing June 1**						
	Billing Year 2011-2012					**Billing Year 2012-2013**						
						Estimated Billing Rates = Estimated based on 2011 calendar year actuals + estimated						
						2012 capital additions						
						True-up Adjustment = Actual 2011 calendar year ATRR compared to actual amount collected						
						from customers, spread evenly over 12 month period						

2013	Jan	Feb	Mar	Apr	May	Jun	Jul	Aug	Sep	Oct	Nov	Dec
					File ATRR & Estimated Billing Rates May 15	**Begin billing June 1**						
	Billing Year 2012-2013					**Billing Year 2013-2014**						
						Estimated Billing Rates = Estimated based on 2012 calendar year actuals + estimated						
						2013 capital additions						
						True-up Adjustment = Actual 2012 calendar year ATRR compared to actual amount collected						
						from customers, spread evenly over 12 month period						

EXHIBIT B TO SCHEDULE 10-B

DUKE ENERGY CAROLINAS FORMULA RATE TEMPLATE

Duke Energy Carolinas, LLC | **DEC- Historic Rate**

OATT Transmission Rate Formula Template Using Form 1 Data | **Page 1 of 7**

Utilizing Historic Cost Data for (Historic Years) with Year-End Average Balances

Summary of Rates

Line		Reference	Jan - May OATT Amount	June - Dec OATT Amount
1	**Gross Revenue Requirement**	Page 3, Line 33	$ -	$-
	Revenue Credits:			
2	Acct 454 - Allocable to Transmission	Attachment G	$ -	$-
3	Acct 456.1 - Net Trans. Rate Revenue Credit	Attachment I	$ -	$ -
4	**Total Revenue Credits**		$ -	$ -
5	**Interest Disbursed w/ Network Prepay Refunds**	Attachment J	$ -	$ -
6	**Revenue Requirement - Customer Owned Facilities**	Company Records	$ -	$ -
7	**[RESERVED]**		$ -	$ -
8	**Transmission Incentives**	Note T	$ -	$ -
9	**Total Transmission Revenue Requirement**	(Line 1 - Line 4 + Line 5 + Line 6 + Line 7+ Line 8)	$ -	$ -
10	**Transmission Loss Factor**	(1+ Loss factor stated in OATT)	0.00%	0.00%
11	**Revenue Tax Factor**	Note U	1	1
12	**Annual Transmission Revenue Requirement before NC Excess ADIT Credit**	(Line 9 x Line 10)/Line 11	$ -	$ -
12A	**NC Excess ADIT Credit - System Basis**	Attachment K2 Annual / Attachment K Line 10	$ -	$ -
12B	**Annual Transmission Revenue Requirement after NC Excess ADIT Credit**	Line 12 + Line 12A	$ -	$ -
13	**Divisor - 12 Month Average Transmission Peak**	Attachment K, Line 6 Total MW/12	$ -	$ -
14	**PTP Trans. Rev Req't Rate $/kW - Year**	Line 12B / Line 13 / 1000	$ -	$ -
15	**PTP Demand Rate $/kW - Month**	Line 14/12	$ -	$ -
16	**Weekly Firm/Non-Firm PTP Rate $/kW - Week**	Line 14/ 52 weeks	$ -	$ -
	Daily Firm/Non-Firm PTP Rates ($/kW):			
17	On-Peak Days	Line 16/ 5 days Line 16 / 7 days	$ -	$ -
18	Off-Peak Days	Line 16/ 5 days Line 16 / 7 days	$ -	$ -
	Non-Firm Hourly PTP Rates ($/kW):	Line 17 / 16hrs Line 18/ 24hrs	$ -	$ -
19	On-Peak Hours	Line 17 / 16hrs Line 18/ 24hrs	$ -	$ -
20	Off-Peak Hours	Line 17 / 16hrs Line 18/ 24hrs	$ -	$ -

Duke Energy Carolinas, LLC
OATT Transmission Rate Formula Template Using Form 1-Data
Utilizing Historic Cost Data for (Historic Years) with Year-End Average Balances
Development of Rate Base

Line	Rate Base:	Reference	Beginning Balance	Ending Balance	Average	Allocation Type	Allocation Factor	OATT Amount
	Gross Plant In Service: (Note A and I)							
1	Production Plant	Page 7, Line 1 (i), (l)	$ -	$ -	$ -	N/A		
1a	Production Contra AFUDC	Attachment P	$ -	$ -	$ -	N/A		
1b	Eliminate Production ARO	Page 7, Line 2 (i), (l)	$ -	$ -	$ -	N/A		
1c	Electric Plant Purchased	Page 7, Line 3 (i), (l) (Note Y)	$ -	$ -	$ -	N/A		
2	Transmission Plant	Page 7, Line 4 (i), (l)	$ -	$ -	$ -	TP	-	$ -
2a	Transmission Contra AFUDC	Attachment P	$ -	$ -	$ -	TP	-	$ -
3	Distribution Plant	Page 7, Line 5 (i), (l)	$ -	$ -	$ -	N/A		
4	General Plant	Page 7, Line 6 (i), (l)	$ -	$ -	$ -	OATT Labor	-	$ -
4a	Eliminate General ARO	Page 7, Line 7 (i), (l)	$ -	$ -	$ -	OATT Labor	-	$ -
4b	Eliminate System Operating Center (SOC)	Schedule 1 Line 1	$ -	$ -	$ -	OATT Labor	-	$ -
5	Intangible Plant	Page 7, Line 8 (i), (l)	$ -	$ -	$ -	Attachment L		$ -
6	**Total Gross Plant**		$ -	$ -	$ -	GP=	-	$ -
	Accumulated Depreciation							
7	Production Depr. Reserve	Page 7, Line 9 (i), (l)	$ -	$ -	$ -	N/A		
7a	Production Contra AFUDC	Attachment P	$ -	$ -	$ -	N/A		
7b	Eliminate Production ARO Accum Depreciation	Attachment P (Note W)	$ -	$ -	$ -	N/A		
8	Transmission Depr. Reserve	Page 7, Line 10 (i), (l)	$ -	$ -	$ -	TP	-	$ -
8a	Transmission Contra AFUDC	Attachment P	$ -	$ -	$ -	TP	-	$ -
9	Distribution Depr. Reserve	Page 7, Line 11 (i), (l)	$ -	$ -	$ -	N/A		
10	General Depr. Reserve	Page 7, Line 12 (i), (l)	$ -	$ -	$ -	OATT Labor	-	$ -
10a	Eliminate General ARO Accum Depreciation	Attachment P (Note W)	$ -	$ -	$ -	OATT Labor	-	$ -
10b	Eliminate SOC Accum Depreciation	Line 10 * Schedule 1 Line 32	$ -	$ -	$ -	OATT Labor	-	$ -
11	Intangible Depr. Reserve	Page 7, Line 13 (i), (l)	$ -	$ -	$ -	Attachment M		$ -
12	**Total Accumulated Depr.**		$ -	$ -	$ -			$ -
	Net Plant in Service							
13	Net Production Plant	Line (1:1c) - Line (7:7b)	$ -	$ -	$ -			$ -
14	Net Transmission Plant	Line (2:2a) - Line (8:8a)	$ -	$ -	$ -			$ -
15	Net Distribution Plant	Line 3 - Line 9	$ -	$ -	$ -			$ -
16	Net General Plant	Line (4:4b) - Line (10:10b)	$ -	$ -	$ -			$ -
17	Net Intangible Plant	Line 5 - Line 11	$ -	$ -	$ -			$ -
18	**Total Net Plant**		$ -	$ -	$ -	NP=	-	$ -
	Adjustments to Rate Base - Deferred Taxes							
19	ADIT - 190	Page 7, Line 14 (i), (l)	$ -	$ -	$ -	Attachment A		$ -
20	ADIT - 281	Page 7, Line 15 (i), (l)	$ -	$ -	$ -	Attachment B		$ -
21	ADIT - 282 (Note O)	Page 7, Line 16 (i), (l)	$ -	$ -	$ -	Attachment B		$ -
22	ADIT - 283	Page 7, Line 17 (i), (l)	$ -	$ -	$ -	Attachment C		$ -
23	**Total Deferred Tax Adjustments**		$ -	$ -	$ -			$ -
	Adjustments to Rate Base - Other							
24	Accum Provision for P&B (182.3 & 228.3)	Attachment D and Attachment E	$ -	$ -	$ -			$ -
25	Pension Cost Adj (182.3, 253, 254)	Attachment D and Attachment F	$ -	$ -	$ -			$ -
25a	Net Excess/ Deficient Deferred Tax Adj (182.3 & 254)	Attachment T	$ -	$ -	$ -	Attachment T		$ -
26	Other Regulatory Assets (182.3)	Page 7, Line 18 (i), (l)	$ -	$ -	$ -	Attachment D		$ -
27	Accum Provision for I&D (228.2)	Page 7, Line 19 (i), (l)	$ -	$ -	$ -	Attachment E		$ -
28	Accum Provision for Prop Ins (228.1)	Page 7, Line 20 (i), (l)	$ -	$ -	$ -	Attachment E		$ -
29	**Net Rate Base Adjustments**		$ -	$ -	$ -			$ -
30	**Plant Held For Future Use**	Note B	$ -	$ -	$ -			$ -
31	**CWIP for Transmission Projects**	Note P	$ -	$ -	$ -			
32	**Unamortized Abandoned Plant**	Note Q	$ -	$ -	$ -	TP	-	$ -
	Rate Base Adjustment - Network Upgrade Prepayment Balances (Note J)							
33	Balance - Network Prepayments	Attachment J	$ -	$ -	$ -	D/A	(1.000000)	$ -
34	Accrued Interest Balance	Attachment J	$ -	$ -	$ -	D/A	1.000000	$ -
34a	Reversal of Anson AFUDC per Settlement	Attachment J	$ -	$ -	$ -	D/A	1.000000	$ -
35	**Total Network Upgrade Prepayment Adjustments**		$ -	$ -	$ -			$ -
	Working Capital							
36	Cash Working Capital (1/8 O&M)	Page 3, Line 14 /8	$ -	$ -	$ -	TP	-	$ -
37	Materials & Supplies - Transmission	Page 7, Line 21 (i), (l)	$ -	$ -	$ -	TP	-	$ -
38	Materials & Supplies - Stores Expense	Page 7, Line 22 (i), (l)	$ -	$ -	$ -	OATT Labor	-	$ -
39	Prepayments	13 Month Average Balance used	$ -	$ -	$ -	GP	-	$ -
40	**Total Working Capital**		$ -	$ -	$ -			$ -
41	**Rate Base (Sum of lines 18, 23, 29, 30, 31, 32, 35 and 40)**		**$ -**	**$ -**	**$ -**			**$ -**

Duke Energy Carolinas, LLC

OATT Transmission Rate Formula Template Using Form 1-Data
Utilizing Historic Cost Data for (Historic Years) with Year-End Average Balances
Development of Revenue Requirement

Line	Expenses	Reference	Ending Balance	Allocation Type	Factor	OATT Amount
	O&M Expense					
1	TOTAL Transmission Expenses	Page 7, Line 23 (l)	$ -			
2	Less Account 561.1, 561.2, 561.3, 561.4 & 565	Page 7, Lines 24-27, 31 (l)	$ -			
2a	Plus: Costs Associated with Transmission Control Center (TCC) booked in above accounts	Schedule 1, Line 8a	$ -			
3	Net Transmission O&M		$ -	TP	0.000000	$ -
4	Total Admin & General Expenses	Page 7, Line 32 (l)	$ -			
4A	Post-Employment Benefits Other than Pension Expense included in line 4 for information only	Note L	$ -			
5	Less (924) Property Insurance	Page 7, Line 33 (l)	$ -			
6	Less (928) Regulatory Commission Expense	Page 7, Line 34 (l)	$ -			
7	Less (930.1) General Advertising Expenses	Page 7, Line 35 (l)	$ -			
8	Less Industry Dues, R&D and Nuc Assoc Exp	Page 7, Line 36 (l)	$ -			
9	Net Labor Related A&G		$ -	OATT Labor	0.000000	$ -
10	(924) Property Insurance	Line 5	$ -	GP	0.000000	$ -
10a	Less Property Insurance allocated to SOC	Line 10 * Schedule 1 Line 35	$ -	GP	0.000000	$ -
11	Trans. Related Regulatory Expense	Page 7, Line 37 (l)	$ -	TP	0.000000	$ -
12	Trans. Related Advertising Exp.	Note Z	$ -	D/A		$ -
13	omitted					
13a	omitted					
14	**Total O&M (Sum of lines 3, 9, and 10 thru 13a)**					$ -
	Depreciation Expense					
15	Transmission Depr. Expense	Page 7, Line 38 (l)	$ -	TP	0.000000	$ -
15a	Add Transmission Contra AFUDC	Attachment P	$ -	TP	0.000000	$ -
15b	Amortization of Abandoned Plant	Note Q	$ -	TP	0.000000	$ -
16	General Depr. Expense	Page 7, Line 39 (l)	$ -	OATT Labor	0.000000	$ -
16a	Less General Depreciation allocated to SOC	Line 16 * Schedule 1 Line 32	$ -	OATT Labor	0.000000	$ -
17	Intangible Amortization	Page 7, Line 40 (l)	$ -	Attachment N		$ -
18	Extraordinary Property Loss	Note R	$ -	TP	0.000000	$ -
19	**Total Depreciation**		$ -			$ -
	Taxes Other Than Income (Note C)					
20	Labor Related	Page 7, Line 41 (l)	$ -	OATT Labor	0.000000	$ -
21	Property Related	Page 7, Line 42 (l) - Note D	$ -	GP	0.000000	$ -
21a	Less Property Related allocated to SOC	Line 21 * Schedule 1 Line 35	$ -	GP	0.000000	$ -
22	**Total Other Taxes**		$ -			$ -
	Return					
23	Rate Base (Page 2, Line 41) * Rate of Return (Page 4, Line 24)					**$ -**
	Income Taxes					
24	NC/SC Composite	Note E	0.00%			
25	Federal		0.00%			
26	Composite T = State + (Federal *(1-State))		0.00%			
27	Tax Rev. Req't Factor = T/(1-T) * (1 - Wtd.Debt.Cost/R)		0.00%			
28	Tax Gross Up Factor = 1 / (1-T)		1.000			
29	Amortized ITC (Negative)	Page 7, Line 43 (l)	$ -			
29a	Net Excess/ Deficient Deferred Tax Expense	Attachment T	$ -			
30	Income Taxes Calculated (Line 23 * Line 27)		$ -			$ -
31	ITC Grossed Up Tax Adjustment (Line 28 * Line 29)		$ -	NP	0.000000	$ -
31a	EDIT Grossed Up Tax Adjustment (Line 28 * Line 29a)					$ -
32	**Total Income Taxes**					**$ -**
33	**TOTAL REVENUE REQUIREMENT (Sum of Lines 14, 19, 22, 23, and 32)**					**$ -**

Duke Energy Carolinas, LLC
OATT Transmission Rate Formula Template Using Form 1-Data
Utilizing Historic Cost Data for (Historic Years) with Year-End Average Balances
Supporting Allocation Factor and Return Calculations

Line		Reference	Total
	Transmission Plant Included in OATT Rate		
1	Total Transmission Plant	Page 2, Lines 2 & 2a	$ -
2	Less: Gen. Step-up Transformers and Interconnection Facilities	Note F	$ -
3	Less: Transmission under 44KV	Page 7, Line 57 (l)	$ -
3a	Less: New Radial Facilities	Note X	$ -
4	Trans Plant for OATT Rate		$ -
5	**TP Allocator (Line 4/Line1)**	Note G	0.0000%
	Labor Allocation Factor		
6	Total Direct Payroll - O&M Labor	Page 7, Line 44 (l), Note H	$ -
7	A&G Labor	Page 7, Line 45 (l), Note H	$ -
8	Adjusted Labor	(Line 6 - Line 7)	$ -
9	Transmission O&M Labor	Page 7, Line 46 (l)	$ -
10	**Trans Labor Factor (Line 9/Line 8)**		0.00000%
11	**OATT Labor Allocator (Line 5*Line 10)**		0.00000%
	Return and Capitalization:		
12	Long Term Interest Expense	Page 7, Line 47 (l)	$ -
13	Net Long Term Interest Expense		$ -
14	Long Term Debt	Page 7, Line 48 (l)	$ -
15	Less Loss on Reacquired Debt	Page 7, Line 49 (l)	$ -
16	Plus Gain on Reacquired Debt	Page 7, Line 50 (l)	$ -
17	Net Long Term Debt		$ -
	Common Stock Development		
18	Proprietary Capital	Page 7, Line 51 (l)	$ -
19	Less Account 216.1	Page 7, Line 52 (l)	$ -
20	Common Stock		$ -
21	**Total Capitalization (Sum Lines 17 and 20)**		**$ -**

	Summary Cap Structure (Note S)	Weight	Cost	Weighted Cost
22	Long Term Debt	0.00%	0.00%	0.00%
23	Common Stock (Note V)	0.00%	10%	0.00%
24	**Overall Return:**			**0.00%**

NOTES:

(A) Contra AFUDC adjustments may relate to inclusion of CWIP in rate base for retail jurisdictions but not wholesale, or inclusion of CWIP in rate base for wholesale jurisdiction but not retail.

(B) FERC Form 1 page 214 excluding non-transmission related items

(C) Excludes all income and gross receipts taxes. Labor related other taxes include FICA and unemployment taxes. Property related taxes include county and local property, highway use, and intangible taxes.

(D) Includes percentage of SC Franchise tax that is related to property

(E) Determined by annual apportionment factors provided by Tax Department

(F) Analysis of Company records of Interconnection facilities built after March 15, 2000.

(G) The allocator "TP" is the percent of gross transmission plant that is OATT related, i.e., after removal of generator step-up and interconnection investments. It also serves as the basis for deriving the OATT transmission related labor from the Form 1 reported values.

(H) Excludes from the payroll reported on Form 1 page 354 amounts for which Duke Energy Carolinas is reimbursed by the Catawba Joint Owners

(I) Amounts in Gross Plant that are not provided by investor funds are excluded. These include FAS 109 and ARO

(J) Network upgrade balance - prepayments is a reduction to rate base, accrued interest balance is an increase to rate base and Anson AFUDC reversal is a reduction.

(K) Duke Energy Carolinas will retain 50% of net revenues consistent with *Pacific Gas and Electric Company, 90 FERC ¶ 61,314.*

(L) DEC will provide, in connection with each Annual Update, a copy of the entire annual actuarial valuation report supporting the derivation of the annual Postretirement Benefits Other than Pensions ("PBOP") expense as charged to FERC account 926, and the amount of such expense included in Total Admin and General Expenses provided on Schedule 10-B, Exhibit B, page 3, line 4 of the Formula Rate. DEC will provide, in connection with each Annual Update, a worksheet that shows the actual PBOP expense components and calculation derivation (including, for each account to which PBOP expense is recorded, the account number, expense amount, description, calculation derivation and source).

(M) [RESERVED]

(N) [RESERVED]

(O) The Company only functionalizes Account 282 during annual tax return process. Will use most recent annual tax return reports to allocate account balance to correct functions.

(P) DEC must make a full section 205 filing at FERC before inputting or changing amounts associated with CWIP

(Q) DEC must make a full section 205 filing at FERC before inputting or changing amounts associated with abandoned plant

(R) DEC must make a full section 205 filing at FERC before inputting or changing amounts associated with extraordinary property loss

(S) ROE will be supported in the original filing and no change in ROE will be made absent a full section 205 filing at FERC. Depreciation rates shown are fixed until changed as the result of a 205 filing at FERC.

(T) DEC must make the appropriate filing at FERC before inputting or changing amounts associated with Transmission Incentives

(U) Revenue Tax Rate shall equal 1.0 minus the applicable revenue or gross receipts tax rate(s) to which Duke is subject for the revenue or gross receipts that Duke receives under this agreement. This is subject to change upon the filing of a full section 205 rate case.

(V) The equity component of the capital structure will be capped at the 2009 year end level of 52.4%. A full section 205 filing at FERC is required to change this stated value.

(W) Account 108.499 from general ledger

(X) "New Radial Facilities" shall have the meaning set forth in Schedule 10, Exhibit B, Formula Rate Principles, Section 11.0(iii)(1).

(Y) Represents production related items

(Z) Education and outreach expenses relating to transmission, for example siting or billing

Duke Energy Carolinas, LLC

OATT Transmission Rate Formula Template Using Form 1-Data Utilizing Historic Cost Data for (2017) with Year-End Average Balances Schedule 1 Duke Energy Carolinas Revenue Requirements

Line		Jan - May	June - Dec	Reference	Beginning Balance	Ending Balance	Average Balance	Average Balance
1	System Operating Center (SOC) Gross Plant			Attachment S1				
2	SOC Intangible Plant			Attachment L				

$	-
$	-

$ - $
$ - $

–	$	-	
–	$	-	
3	Less: SOC Accumulated Depreciation	Gross Plant	Page 2, Line 10b

$ -) $ - $

–	$	-		
4	Less: SOC Accumulated Depreciation Intangible Plant		Attachment M	

$	-	$ - $

-		$ -	
5	**Total Net SOC**		Sum (Line 1: Line 4)

$ -

$-$

–	$	-	
6	Working Capital		1/8 * [Line 13 - Line 9-Line 10-Line 12]

		$ -	$ -		
7	**Total Rate Base**		Line 5 + Line 6	$ -	$ -
8	Total Load Dispatch & Scheduling Expense- Accounts 561.1 - 561.4		Attachment Q		
8a	Less: Costs Associated with TCC		Attachment Q		
8b	Less: NERC/SERC Fees related to Retail Load		Attachment Q		
8c	Less: Scheduling Fees Associated with Off-system Sales		Attachment Q		
9	Depreciation Expense on SOC		Page 3, Line 16 a		
10	Amortization Expense on SOC		Attachment N		
11	Property Insurance on SOC		Page 3, Line 10a		

$	-	$ -
$	-	$ -
$	-	$ -
$	-	$ -
$	-	$ -
$	-	$ -
$	-	$ -
12	Property Related Taxes Other than Income on SOC	Page 3, Line 21a

		$ -	$ -		
13	Total Expenses		Sum (Line 8: Line 12)	**$ -**	**$ -**
14	**Return on Rate Base**		Line 7 * Page 4, Line 24		
15	**Income Taxes**		Line 14 * Page 3 Line 27		

$	-	$	-	
$	-	$	-	
16	Total Revenue Requirement			Sum Line 13 + Line 14 + Line 15
17	Less: Non- Firm PTP Service Credit (prior year Sched 1 revenue from non-firm PTP transactions)			Attachment I

	$ -	**$** -					
	$ -	$ -					
18	**Transmission Loss Factor**		(1+ Loss factor stated in OATT)		0.00%		0.00%
19	**Schedule 1 Annual Revenue Requirement**		(Line 16 - Line 17) x Line 18	$	-	$	-
20	12 Month Average Transmission Peak		Page 1, Line 13		-		-
21	Annual Point to Point Rate $/kW/Year		(Line 19 / Line 20/1000)				
22	Annual Point to Point Rate $/kW/mth		(Line 21/ 12)				
23	Annual Point to Point Rate $/kW/Week		(Line 21/ 52)				
24	Annual Point to Point Rate $/kW/Day		(Line 21/ 365)				
25	Annual Point to Point Rate $/kW/Hour		(Line 21/ 8760)				

$	-	$	-	
$	-	$	-	
$	-	$	-	
$	-	$	-	
$	-	$	-	

Daily Firm/Non-Firm PTP Rates ($/kW):

26	On-Peak Days	Line 23 / 5 days
27	Off-Peak Days	Line 23 / 7 days

$	-	$	-	
$	-	$	-	
	Non-Firm Hourly PTP Rates ($/kW):			
28	On-Peak Hours			Line 26/ 16hrs
29	Off-Peak Hours			Line 27/ 24hrs

$	-	$	-	
$	-	$	-	
	SOC Allocation Factor Calculation			
30	SOC Gross Plant			Line 1
31	Gross General Plant			Page 2, Line 4

$	-	$	-		
$	-	$	-		
32	SOC GP Allocation Factor		Line 30 / Line 31	0.0000%	0.0000%
33	SOC Gross Plant		Line 1		
34	System Gross Plant (Including SOC)		Page 2, Line 6 - Page 2, Line 4b		

$	-	$	-		
$	-	$	-		
35	SOC System Allocation Factor			Line 33 / Line 34	0.0000%	0.0000%

Duke Energy Carolinas, LLC
OATT Transmission Rate Formula Template Using Form 1-Data
Utilizing Historic Cost Data for (Historic Years) with Year-End Average Balances
Transmission Rate Formula Support – List of Inputs from FERC Form-1

Col.	(a)	(b)	(c)	(d)	(e)	(f)	(g)	(h)	(i)	(j)	(k)	(l)	(m)
Line	Reference	Category	Page	Row	Prior Yr. Col.	Curr. Yr. Col.	Beginning Balance/ Prior Year Amount	Adjustments [1]	Beginning Balance / Prior Year Amount (Net of Adjustments)	Ending Balance/ Current Year Amount	Adjustments [1]	Ending Balance/ Current Year Amount (Net of Adjustments)	Adjustment Comment [2]
1	FERC Form 1, 204-205, 46, (b) & (g)	Production Plant	204-205	46	b	g							
2	FERC Form 1, 204-205, 15,24,34,44, (b) & (g)	Production ARO	204-205	15,24,34,44	b	g							
3	FERC Form 1, 206-207, 101, (b) & (g)	Plant Purchased (Sold)	206-207	101	b	g							
4	FERC Form 1, 206-207, 58, (b) & (g)	Transmission Plant	206-207	58	b	g							
5	FERC Form 1, 206-207, 75, (b) & (g)	Distribution Plant	206-207	75	b	g							
6	FERC Form 1, 206-207, 99, (b) & (g)	General Plant	206-207	99	b	g							
7	FERC Form 1, 206-207, 98, (b) & (g)	General Plant ARO	206-207	98	b	g							
8	FERC Form 1, 204-205, 5, (b) & (g)	Intangible Plant	204-205	5	b	g							
9	FERC Form 1, 219, 20-24, (c)	Production Depreciation Reserve	219	20-24	na	c							
10	FERC Form 1, 219, 25, (c)	Transmission Depreciation Reserve	219	25	na	c							
11	FERC Form 1, 219, 26, (c)	Distribution Depreciation Reserve	219	26	na	c							
12	FERC Form 1, 219, 28, (c)	General Depreciation Reserve	219	28	na	c							
13	FERC Form 1, 200, 21, (c)	Intangible Depreciation Reserve	200	21	na	c							
14	FERC Form 1, 234, 18, (b) & (c)	ADIT (Account 190)	234	18	b	c							
15	FERC Form 1, 272-273, 17, (b) & (k)	ADIT (Account 281)	272-273	17	b	k							
16	FERC Form 1, 274-275, 9, (b) & (k)	ADIT (Account 282)	274-275	9	b	k							
17	FERC Form 1, 276-277, 19, (b) & (k)	ADIT (Account 283)	276-277	19	b	k							
18	FERC Form 1, 232, 44, (b) & (f)	Other Regulatory Assets	232	44	b	f							
19	FERC Form 1, 112, 28, (d) & (c)	Accum Provision for I&D	112	28	d	c							
20	FERC Form 1, 112, 27, (d) & (c)	Accum Provision for Property Insurance	112	27	d	c							
21	FERC Form 1, 227, 5 (assigned),8, (b) & (c)	Materials and Supplies- Transmission	227	5 (assigned),8	b	c							
22	FERC Form 1, 227, 16, (b) & (c)	Materials and Supplies- Stores	227	16	b	c							
23	FERC Form 1, 321, 112, (c) & (b)	Transmission O&M Expense	321	112	c	b							
24	FERC Form 1, 321, 85, (c) & (b)	561.1 Load Dispatch Reliability	321	85	c	b							
25	FERC Form 1, 321, 86, (c) & (b)	561.2 Load Dispatch Monitor and Operate Trans System	321	86	c	b							
26	FERC Form 1, 321, 87, (c) & (b)	561.3 Load Dispatch Trans Service & Scheduling	321	87	c	b							
27	FERC Form 1, 321, 88, (c) & (b)	561.4 Scheduling System Control and Dispatch Services	321	88	c	b							
28	FERC Form 1, 321, 89, (c) & (b)	561.5 Reliability Planning	321	89	c	b							
29	FERC Form 1, 321, 90, (c) & (b)	561.6 Transmission Service	321	90	c	b							
30	FERC Form 1, 321, 91, (c) & (b)	561.7 Generation Interconnect Studies	321	91	c	b							
31	FERC Form 1, 321, 96, (c) & (b)	Transmission of Electricity by Others	321	96	c	b							
32	FERC Form 1, 323, 197, (c) & (b)	A&G Expense	323	197	c	b							
33	FERC Form 1, 323, 185, (c) & (b)	Property Insurance	323	185	c	b							
34	FERC Form 1, 323, 189, (c) & (b)	Regulatory Commission Expense	323	189	c	b							
35	FERC Form 1, 323, 191, (c) & (b)	General Advertising Expense	323	191	c	b							
36	FERC Form 1, 335, 1-3, (b)	Industry Dues, R&D and Nuc Assoc Exp	335	1-3		b							
37	FERC Form 1, 350, 19, (b)	Annual FERC Billing	350	19		b							
38	FERC Form 1, 336, 7, (f)	Depr. & Amort. -Transmission Plant	336	7		f							
39	FERC Form 1, 336, 10, (f)	Depr. & Amort. -General Plant	336	10		f							
40	FERC Form 1, 336, 1, (f)	Depr. & Amort. -Intangible Plant	336	1		f							
41	FERC Form 1, 262-263, 5,17,27,30,31, (i)	Labor Related Taxes	262-263	5,17,27,30,31		i							
42	FERC Form 1, 262-263, 10,23,32, (i)	Property Related Taxes	262-263	10,23,32		i							
43	FERC Form 1, 266, 8, (f)	Amortized ITC	266	8		f							
44	FERC Form 1, 355, 65, (b)	O&M Labor	355	65		b							
45	FERC Form 1, 354, 27, (b)	A&G Labor	354	27		b							
46	FERC Form 1, 354, 21, (b)	Transmission O&M Labor	354	21		b							
47	FERC Form 1, 117, 62-67, (c)	Long Term Interest Expense	117	62-67		c							
48	FERC Form 1, 112, 24, (c)	Total Long-Term Debt	112	24		c							
49	FERC Form 1, 111, 81, (c)	Loss on Reacquired Debt	111	81		c							
50	FERC Form 1, 113, 61, (c)	Unamortized Gain on Reacquired Debt	113	61		c							
51	FERC Form 1, 112, 16, (c)	Proprietary Capital	112	16		c							
52	FERC Form 1, 112, 12, (c)	Unappropriated Undistributed Sub Earnings	112	12		c							
53	FERC Form 1, 400, 17, (e)	Firm Network Service for Self	400	17		e							
54	FERC Form 1, 400, 17, (f)	Firm Network Service for Others	400	17		f							
55	FERC Form 1, 400, 17, (g)	Long Term PTP Reservations	400	17		g							
56	FERC Form 1, 400, 17, (j)	Other Service	400	17		j							
57	FERC Form 1, 423.3, 22, (l)	Transmission Less than 44kV	423.3	22		l							
58	FERC Form 1, 206-207, 86, (b) & (g)	(389) Land and Land Rights	206-207	86	b	g							
59	FERC Form 1, 206-207, 87, (b) & (g)	(390) Structures and Improvements	206-207	87	b	g							
60	FERC Form 1, 206-207, 88, (b) & (g)	(391) Office Furniture and Equipment	206-207	88	b	g							
61	FERC Form 1, 206-207, 89, (b) & (g)	(392) Transportation Equipment	206-207	89	b	g							
62	FERC Form 1, 206-207, 90, (b) & (g)	(393) Stores Equipment	206-207	90	b	g							
63	FERC Form 1, 206-207, 91, (b) & (g)	(394) Tools, Shop and Garage Equipment	206-207	91	b	g							
64	FERC Form 1, 206-207, 92, (b) & (g)	(395) Laboratory Equipment	206-207	92	b	g							
65	FERC Form 1, 206-207, 93, (b) & (g)	(396) Power Operated Equipment	206-207	93	b	g							
66	FERC Form 1, 206-207, 94, (b) & (g)	(397) Communication Equipment	206-207	94	b	g							
67	FERC Form 1, 206-207, 95, (b) & (g)	(398) Miscellaneous Equipment	206-207	95	b	g							
68	FERC Form 1, 206-207, 97, (b) & (g)	(399) Other Tangible Property	206-207	97	b	g							

Notes:
[1]: The Adjustments column provides for adjustments to Form 1 amounts, based on the application of clearly identified and supported information, to ensure that the correct amount is billed.
[2]: Describe each adjustment as necessary.

Duke Energy Carolinas, LLC
Transmission Rate Formula Support
Utilizing Historic Cost Data for (Historic Years) with Year-End Average Balances
Deferred Income Tax Balances - GL Account 190

DEC- Historic Rate
Attachment A

Item [1]	GL Balance 12/31/20xx Dr(Cr)	Adjustment [2]	Adjusted 12/31/20xx GL Bal Dr(Cr)	GL Balance 12/31/20xx Dr(Cr)	Adjustment [2]	Adjusted 12/31/20xx GL Bal Dr(Cr)	Average Balance	Allocation [3] Type	Factor	OATT Amount	Adjustment Comments [4]
Total GL Account 190	$ -	$ -	$ -	$ -		$ -	$ -			$ -	

Notes:
[1]: Lines added as needed to accommodate all separately-listed items.
[2]: The Adjustments column provides for adjustments to Form 1 amounts, based on the application of clearly identified and supported information, to ensure that the correct amount is billed.
[3]: Types of Allocation Factors can include, but are not limited to, “OATT Labor”, “TP”, “NP”, “Production”, “Distribution” and “Company Records”.
[4]: Describe each adjustment as necessary.

Duke Energy Carolinas, LLC
Transmission Rate Formula Support
Utilizing Historic Cost Data for (Historic Years) with Year-End Average Balances
Deferred Income Tax Balances - GL Account Nos. 281 & 282

DEC-Historic Rate
Attachment B

Item [1]	GL Balance 12/31/20xx Dr(Cr)	Adjustment [2]	Adjusted 12/31/20xx GL Bal Dr(Cr)	GL Balance 12/31/20xx Dr(Cr)	Adjustment [2]	Adjusted 12/31/20xx GL Bal Dr(Cr)	Average Balance	Allocation [3] Type	Factor	OATT Amount	Adjustment Comments [4]
Total GL Account 281	$ -	$ -	$ -	$-	$ -	$ -	$ -			$ -	
Total GL Account 282	$ -	$ -	$ -	$-	$ -	$ -	$ -			$ -	

Notes:
[1]: Lines added as needed to accommodate all separately-listed items.
[2]: The Adjustments column provides for adjustments to Form 1 amounts, based on the application of clearly identified and supported information, to ensure that the correct amount is billed.
[3]: Types of Allocation Factors can include, but are not limited to, “OATT Labor”, “TP”, “NP”, “Production”, “Distribution” and “Company Records”.
[4]: Describe each adjustment as necessary.

Duke Energy Carolinas, LLC
Transmission Rate Formula Support
Utilizing Historic Cost Data for (Historic Years) with Year-End Average Balances
Deferred Income Tax Balances - GL Account 283

DEC- Historic Rate
Attachment C

Item [1]	GL Balance 12/31/20xx Dr(Cr)	Adjustment [2]	Adjusted 12/31/20xx GL Bal Dr(Cr)	GL Balance 12/31/20xx Dr(Cr)	Adjustment [2]	Adjusted 12/31/20xx GL Bal Dr(Cr)	Average Balance	Allocation [3] Type	Factor	OATT Amount	Adjustment Comment [4]
Total GL Account 283	**$** -	$ -	**$** -	**$** -	$ -	**$** -	**$** -			**$** -	

Notes:
[1]: Lines added as needed to accommodate all separately-listed items.
[2]: The Adjustments column provides for adjustments to Form 1 amounts, based on the application of clearly identified and supported information, to ensure that the correct amount is billed.
[3]: Types of Allocation Factors can include, but are not limited to, “OATT Labor”, “TP”, “NP”, “Production”, “Distribution” and “Company Records”.
[4]: Describe each adjustment as necessary.

Duke Energy Carolinas, LLC
Transmission Rate Formula Support
Utilizing Historic Cost Data for (Historic Years) with Year-End Average Balances
Other Regulatory Assets - GL Account 182.3

DEC- Historic Rate
Attachment D

Item	GL Balance 12/31/20xx Dr(Cr)	GL Balance 12/31/20xx Dr(Cr)	Average Balance	Allocation Type	Factor	OATT Amount
OPEB	$ -	$ -	$ -	OATT Labor	0.000000	$ -
Pension Cost Adj	$ -	$ -	$ -	OATT Labor	0.000000	$ -
Pension Non Qualified	$ -	$ -	$ -	Other	0.000000	$ -
Sub-Total GL Account 182.3	**$ -**	**$ -**	**$ -**			**$ -**

Duke Energy Carolinas, LLC
Transmission Rate Formula Support

Other Regulatory Assets - GL Account 182.3

Item [1]	GL Balance 12/31/20xx Dr(Cr)	GL Balance 12/31/20xx Dr(Cr)	Average Balance	Allocation Type	Factor	OATT Amount
Gridsouth Investment NC Retail	$ -	$ -	$ -	Other	0.000000	$ -
Gridsouth Investment SC Retail	$ -	$ -	$ -	Other	0.000000	$ -
FAS 109	$ -	$ -	$ -	Other	0.000000	$ -
ARO	$ -	$ -	$ -	Other	0.000000	$ -
Vacation Accrual	$ -	$ -	$ -	Other	0.000000	$ -
Nantahala Rewind	$ -	$ -	$ -	Production	0.000000	$ -
Thorpe Rewind	$ -	$ -	$ -	Production	0.000000	$ -
Section 124	$ -	$ -	$ -	Production	0.000000	$ -
NC DSM Regulatory Asset	$ -	$ -	$ -	Other	0.000000	$ -
Allen Environmental Compliance	$ -	$ -	$ -	Production	0.000000	$ -
Energy Efficiency Program Cost Deferral -SC	$ -	$ -	$ -	Production	0.000000	$ -
Energy Efficiency Program Cost Deferral -NC	$ -	$ -	$ -	Production	0.000000	$ -
Renewable Energy & Energy Portfolio Cost Deferral	$ -	$ -	$ -	Production	0.000000	$ -
Pension Expense Deferral	$ -	$ -	$ -	Other	0.000000	$ -
Cliffside Deferral	$ -	$ -	$ -	Production	0.000000	$ -
Gridsouth Investment - Wholesale	$ -	$ -	$ -	Other	0.000000	$ -
Interest Rate Swap	$ -	$ -	$ -	Other	0.000000	$ -
Deferred VOP Expenses	$ -	$ -	$ -	Other	0.000000	$ -
Coastal Wind Project deferred costs - NC	$ -	$ -	$ -	Production	0.000000	$ -
Deferred Pension Expenses	$ -	$ -	$ -	Other	0.000000	$ -
Buck and Bridgewater Project deferred costs	$ -	$ -	$ -	Production	0.000000	$ -
Clemson Grant	$ -	$ -	$ -	Other	0.000000	$ -
Save-A-Watt program deferrals	$ -	$ -	$ -	Production	0.000000	$ -
Dan River & Cliffside 5 deferred costs	$ -	$ -	$ -	Production	0.000000	$ -
McGuire Uprates	$ -	$ -	$ -	Production	0.000000	$ -
Fukushima CyberSecurity	$ -	$ -	$ -	Production	0.000000	$ -
Nuclear Levelization	$ -	$ -	$ -	Production	0.000000	$ -
Billing System Deferral	$ -	$ -	$ -	Other	0.000000	$ -
Natural Gas Hedging - MTM	$ -	$ -	$ -	Other	0.000000	$ -
Rate Case Costs	$ -	$ -	$ -	Other	0.000000	$ -
Coal Ash Basin - ARO Deferral	$ -	$ -	$ -	Other	0.000000	$ -
Unbilled Fuel	$ -	$ -	$ -	Production	0.000000	$ -
SC Distributed Energy Resource Program	$ -	$ -	$ -	Other	0.000000	$ -
Rotable Fleet Spare	$ -	$ -	$ -	Production	0.000000	$ -
NCUC Regulatory Fee	$ -	$ -	$ -	Other	0.000000	$ -
Other Deferred Costs	$ -	$ -	$ -	Other	0.000000	$ -
Coal Ash Remediation Costs	$ -	$ -	$ -	Other	0.000000	$ -
Advanced Metering Infrastructure	$ -	$ -	$ -	Other	0.000000	$ -
Deferred Fuel	$ -	$ -	$ -	Production	0.000000	$ -
Sub-Total GL Account 182.3	**$ -**	**$ -**	**$ -**			**$ -**
Total GL Account 182.3	**$ -**	**$ -**	**$ -**			**$ -**

Notes:
[1]: Lines added as needed to accommodate all separately-listed items.

Duke Energy Carolinas, LLC
Transmission Rate Formula Support
Utilizing Historic Cost Data for (Historic Years) with Year-End Average Balances
Accumulated Provisions for Property Insurance - GL Account 228.1

DEC- Historic Rate
Attachment E

	GL Balance 12/31/20xx Dr(Cr)	GL Balance 12/31/20xx Dr(Cr)	Average Balance	Allocation Type	Factor	OATT Amount
Property Insurance Reserve	$ -	$ -	$ -	GP	0.000000	$ -
Total GL Account 228.1	**$ -**	**$ -**	**$ -**			**$ -**

Accumulated Provisions for Injuries and Damages - GL Account 228.2

	GL Balance 12/31/20xx Dr(Cr)	GL Balance 12/31/20xx Dr(Cr)	Average Balance	Allocation Type	Factor	OATT Amount
I and D Extraordinary	$ -	$ -	$ -	Other	0.000000	$ -
Environmental	$ -	$ -	$ -	NP	0.000000	$ -
Total GL Account 228.2	**$ -**	**$ -**	**$ -**			**$ -**

Accumulated Provisions for Pensions and Benefits - GL Account 228.3

	GL Balance 12/31/20xx Dr(Cr)	GL Balance 12/31/20xx Dr(Cr)	Average Balance	Allocation Type	Factor	OATT Amount
DPC OPEB FAS 106	$ -	$ -	$ -	OATT Labor	0.000000	$ -
DPC Pos EMP FAS 112	$ -	$ -	$ -	OATT Labor	0.000000	$ -
DPC Pos EMP FAS 87 (Cinergy)	$ -	$ -	$ -	OATT Labor	0.000000	$ -
DPC Pension Liability (FAS 87)	$ -	$ -	$ -	OATT Labor	0.000000	$ -
Pension Rest	$ -	$ -	$ -	OATT Labor	0.000000	$ -
Total GL Account 228.3	**$ -**	**$ -**	**$ -**			**$ -**

Duke Energy Carolinas, LLC
Transmission Rate Formula Support

DEC-Historic Rate
Attachment F

Utilizing Historic Cost Data for (Historic Years) with Year-End Average Balances

Other Deferred Credits - GL Account 253

	GL Balance 12/31/20xx Dr(Cr)	GL Balance 12/31/20xx Dr(Cr)	Average Balance	Allocation Type	Factor	OATT Amount
Pension Cost Adj (ODC)	$ -	$ -	$ -	OATT LABOR	0.000000	$ -
OPEB	$ -	$ -	$ -	OATT LABOR	0.000000	$ -
Amounts Not Allocated to Transmission	$ -	$ -	$ -	Other	0.000000	$ -
Total GL Account 253	**$ -**	**$ -**				**$ -**

Other Regulatory Liabilities - GL Account 254

	GL Balance 12/31/20xx Dr(Cr)	GL Balance 12/31/20xx Dr(Cr)	Average Balance	Allocation Type	Factor	OATT Amount
Pension Cost Adj (ORL)	$ -	$ -	$ -	OATT LABOR	0.000000	$ -
OPEB	$ -	$ -	$ -	OATT LABOR	0.000000	$ -
Amounts Not Allocated to Transmission	$ -	$ -	$ -	Other	0.000000	$ -
Total GL Account 254	**$ -**	**$ -**				**$ -**

Duke Energy Carolinas, LLC
Transmission Rate Formula Support
Utilizing Historic Cost Data for (Historic Years) with Year-End Average Balances
Account 454 Reconciliation - Rents

DEC-Historic Rate
Attachment G

North Carolina [1]	Reference	Amount	Allocation [2] Type	Factor	OATT Amount
Total GL Account 454		**$ -**			**$ -**

Notes:

[1]: Lines added as needed to accommodate all separately-listed items
[2]: Types of Allocation Factors can include, but are not limited to, “OATT Labor”, “TP”, “NP”, “Production”, “Distribution” and “Company Records”.

Duke Energy Carolinas, LLC
Transmission Rate Formula Support

DEC-Historic Rate
Attachment H

Account 454.3 Reconciliation - Tower Lease Revenues

Line	Tower Lease Revenue Net Margin	Reference	Amount	
1	Revenues -0454300	Attachment G	$ -	
2	Less: Direct Costs	Company Records		$ -
3	Net Revenues Before Taxes	Line 1 - Line 2	$ -	
4	Composite Tax Rate	Page 3, Line 26		0.00%
5	After Tax Net Revenues	Line 3 - (Line 3 * Line 4)	$ -	
6	TP Allocator	Page 4, Line 5		0.00%
7	Adjusted Net Revenues	Line 5 * Line 6	$ -	
8	Revenue Sharing Percent	Note K		50.00%
9	Revenue Credit Amount	Line 7 * Line 8	$ -	
	Tower Lease Revenue Reported in Formula			
10	Revenues -0454300	Company Records	$ -	
11	Less: Direct Costs	Line 2 * Page 4, Line 11		$ -
12	Net Revenues Before Taxes	Line 10 - Line 11	$ -	
13	Composite Tax Rate	Page 3, Line 26		0.00%
14	After Tax Net Revenues	Line 12 - (Line 12*Line 13)	$ -	
15	TP Allocator	Page 4, Line 5		0.00%
16	Adjusted Net Revenues	Line 14 * Line 15	$ -	
17	Revenue Sharing Percent	Note K		50.00%
18	Revenue Credit Amount	Line 16 * Line 17	$ -	
	Tower Lease Revenue Adjustment to Formula			
19	Revenue Credit	Line 9	$ -	
20	Revenue Credit in other components of Formula	Line 18	$ -	
21	Adjusted Revenue Credit	Line 19 - Line 20	$ -	

Duke Energy Carolinas, LLC
Transmission Rate Formula Support

DEC-Historic Rate
Attachment I

Utilizing Historic Cost Data for (Historic Years) with Year-End Average Balances

Transmission of Electricity for Others

Form 1 Reference [1]	Payment by (Column (a))	Classification (Column (d))	Demand Charges (Column (k))	Energy Charges (Column (l))	Ancillary/Other Revenue (Column (m))	Total Revenue (Column (n))
			$ -	$ -	$ -	$ -
			$ -	$ -	$ -	$ -
			$ -	$ -	$ -	$ -
			$ -	$ -	$ -	$ -
			$ -	$ -	$ -	$ -
			$ -	$ -	$ -	$ -
Total Per Form 1			$ -	$ -	$ -	$ -

Total Point-to-Point (PTP_ Revenues and Ancillary Revenues	$ -
Add: Duke Energy Carolinas Bulk Power Marketing Transmission Revenues and Ancillary Revenues	$ -
Remove: Long-Term Firm PTP Transmission Revenues and Ancillaries	$ -
Remove: PTP Non-Firm and Short-Term Firm Schedule 2 and Loss Compensation Ancillary Revenues	$ -
Remove: PTP Non-Firm and Short-Term Firm PTP Schedule 1 Revenues	$ -
PTP Non-Firm and Short-Term Firm Revenues – Net of Ancillary Services	$ -

Notes:
[1]: Lines may be added or removed as needed to accommodate all separately-listed items on FERC Form 1 page 328.

Duke Energy Carolinas, LLC
Transmission Rate Formula Support

DEC-Historic Rate
Attachment J

Customer Prepayment for Network Upgrades Detail
[Name of Project]

Balances as of the Beginning of Year:

	Cash Payments	Accrued Interest	Total Liability
Beginning Balance	$ -	$ -	$ -
Allocation of Balance Refunds	0.00%	0.00%	

AFUDC Reversal Calculation:

(Beginning Balance)

(1)	(2) = 12/(1)	(3) = x/(2)	(4) = [1-(3)]*0
Depr. Rate	Avg. Depr. Life (Months)	% Depreciated 12/31/20xx	Net AFUDC Reversal
0.00%	0.000	0.0000$	0

Test Year Refund History:

	Allocation of Amount Refunded				
Service Month	Amount Refunded	Current Interest	Cash Prepayment	Accrued Interest	Ending Liability Balance
1/1/20xx	$ -	$ -	$ -	$ -	$ -
2/1/20xx	$ -	$ -	$ -	$ -	$ -
3/1/20xx	$ -	$ -	$ -	$ -	$ -
4/1/20xx	$ -	$ -	$ -	$ -	$ -
5/1/20xx	$ -	$ -	$ -	$ -	$ -
6/1/20xx	$ -	$ -	$ -	$ -	$ -
7/1/20xx	$ -	$ -	$ -	$ -	$ -
8/1/20xx	$ -	$ -	$ -	$ -	$ -
9/1/20xx	$ -	$ -	$ -	$ -	$ -
10/1/20xx	$ -	$ -	$ -	$ -	$ -
11/1/20xx	$ -	$ -	$ -	$ -	$ -
12/1/20xx	$ -	$ -	$ -	$ -	$ -
	$ -	$ -	$ -	$ -	
Interest Disbursed	$ -	$ -		$ -	
Allocation of Ending Balance			$ -	$ -	$ -

AFUDC Reversal Calculation:

(1)	(2) = 12 / (1)	(3) = x / (2)	(4)=[1-(3)]*0
Depr. Rate	Avg. Depr. Life (Months)	% Depreciated 12/31/20xx	Net AFUDC Reversal
0.00%	0.000	0.000%	**0**

Duke Energy Carolinas, LLC
Transmission Rate Formula Support
Utilizing Historic Cost Data for (Historic Years) with Year-End Average Balances
Wholesale Allocation Factor

DEC-Historic Rate
Attachment K

	Wholesale Allocation Factor	**Reference**	
1	System Long Term Firm Transmission Peak Demand (MW)		
2	Firm Network Service for Self	Page 7, Line 53 (l)	-
3	Firm Network Service for Others	Page 7, Line 54 (l)	-
4	Long Term PTP Reservations	Page 7, Line 55 (l)	-
5	Other Service	Page 7, Line 56 (l)	-
6	Total System Long Term Firm Transmission Load Peak Demand	Sum (Line 2 : Line 5)	-
7	Transmission Loss Factor from OATT	DEC OATT	0%
8	Firm Network Service for Others Adjusted for Losses	Line 3 / (1 + Line 7)	0
9	Total Firm Network Service for Others Adjusted for Losses + Long Term Firm PTP Reservations	Line 4 + Line 8	-
10	Peak Demand Allocation Factor	Line 9 / Line 6	0.0000%

North Carolina Excess ADIT Wholesale Rate Credits ($) FERC

Docket Nos. ER19-463-000 & ER20-__-000

FERC Form 1 Calendar Year	NC Excess ADIT Credit (Wholesale Basis)
2018	0
2019	(646,974)
2020	(625,970)
2021	(605,159)
2022	(584,549)
2023	(564,149)
2024	(543,969)
2025	(524,018)
2026	(504,309)

Note: For inclusion as a System Revenue Requirement Credit on Summary Tab Line 12b, the values shown above are grossed up using the annual Peak Demand Allocation Factor as calculated on Attachment K, Line 10.

Duke Energy Carolinas, LLC
Transmission Rate Formula Support
Utilizing Historic Cost Data for (Historic Years) with Year-End Average Balances
Intangibles - Gross Plant
Accounts 302 and 303

DEC- Historic Rate
Attachment L

Project Description [1]	GL Balance 12/31/20xx Dr(Cr)	GL Balance 12/31/20xx Dr(Cr)	Average Balance	Allocation [2] Type	Factor	OATT Amount
TOTAL	**$ -**	**$ -**	**$ -**			**$ -**

Notes:
[1]: Lines may be added or removed as needed to accommodate all separately-listed items used to calculate the OATT Amount.
[2]: Types of Allocation Factors can include, but are not limited to, “OATT Labor”, “TP”, “NP”, “Production”, “Distribution” and “Company Records”.

Duke Energy Carolinas, LLC
Transmission Rate Formula Support
Utilizing Historic Cost Data for (Historic Years) with Year-End Average Balances
Intangibles - Accumulated Amortization

DEC- Historic Rate
Attachment M

Project Description [1]	GL Balance 12/31/20xx Dr(Cr)	GL Balance 12/31/20xx Dr(Cr)	Average Balance	Allocation [2] Type	Factor	OATT Amount
TOTAL - Form 1, Page 200 Line 21	**$ -**	**$ -**	**$ -**			**$ -**

Notes:
[1]: Lines may be added or removed as needed to accommodate all separately-listed items used to calculate the OATT Amount.
[2]: Types of Allocation Factors can include, but are not limited to, “OATT Labor”, “TP”, “NP”, “Production”, “Distribution” and “Company Records”.

Duke Energy Carolinas, LLC
Transmission Rate Formula Support
Utilizing Historic Cost Data for (Historic Years) with Year-End Average Balances
Intangibles - Amortization Expense

DEC- Historic Rate
Attachment N

Project Description [1]	GL Balance 12/31/20xx Dr(Cr)	Allocation [2] Type	Factor	OATT Amount
TOTAL	**$ -**			**$ -**

Notes:
[1]: Lines may be added or removed as needed to accommodate all separately-listed items used to calculate the OATT Amount.
[2]: Types of Allocation Factors can include, but are not limited to, “OATT Labor”, “TP”, “NP”, “Production”, “Distribution” and “Company Records”.

Depreciation Rates by FERC Account are listed in DEC Rate Schedule No. 514

Duke Energy Carolinas, LLC Transmission Rate Base
Contra AFUDC Amounts Recorded Pursuant to CFR 35.25(f)(2)

DEC- Historic Rate
Attachment P

Description [1]	Contra AFUDC Amount	Commercial Operation Date	first yr. partial year	deprec rate from CO date thru 11/12/1991	deprec rate effective 11/13/1991	weighted deprec rate year ending 12/31/1991	number of years from CO date ending 12/31/1990	accum deprec 12/31/1990 (B)*(E)*(H)	annual depr expense year ending 12/31/1991 B*G	accum deprec 12/31/1991 I+J	annual depr expense beginning 1/1/1992 B*F	number of years from 12/31/1991 ending 12/31/2004	accum deprec 12/31/2004 K+(L*M)	deprec rate effective 1/1/2005	number of years from 12/31/2004 ending 12/31/2007	accum deprec 12/31/2007 N+(C*O*P)	annual depr expense year ending 12/31/2008 T-R	accum deprec 12/31/2008 R+(C*P)	deprec rate effective 1/1/2009	annual depr expense year ending 12/31/2009 W-T	accum deprec 12/31/2009 T+(C*U)	deprec rate effective 1/1/20xx	annual depr expense year ending 12/31/20xx Z-W	accum deprec 12/31/20xx W+(C*X)
Production contra afudc																								
	$0							$0	$0	$0	$0		$0			$0	$0	$0		$0	$0			
	$0							$0	$0	$0	$0		$0			$0	$0	$0		$0	$0			
	$0							$0	$0	$0	$0		$0			$0	$0	$0		$0	$0			
Total	$0							$0	$0	$0	$0		$0			$0	$0	$0		$0	$0			
Transmission contra afudc																								
	$0							$0	$0	$0	$0		$0			$0	$0	$0		$0	$0			
	$0							$0	$0	$0	$0		$0			$0	$0	$0		$0	$0			
								$0	$0	$0	$0		$0			$0	$0	$0		$0	$0			
Total	$0							$0	$0	$0	$0		$0			$0	$0	$0		$0	$0			
Total contra afudc	$0							$0	$0	$0	$0		$0			$0	$0	$0		$0	$0			

Account 0108499 - [1]	
	-
	-
	-
	-
	-
	-
Total ARO	-

Notes:
[1]: Lines added as needed to accommodate all separately-listed items.

Duke Energy Carolinas, LLC
Transmission Rate Base
561.1- 561.4 Break Down

DEC- Historic Rate
Attachment Q

	Reference	GL Balance 12/31/20xx Dr(Cr)
Total Accounts 561.1-561.4 (321.85.b:321.88.b)	Page 7, Lines 24-27 (l)	$ -
		$ -
561.1 Load Dispatch Reliability	Page 7, Lines 24 (l)	$ -
561.2 Load Dispatch Monitor and Operate Trans System	Page 7, Lines 25 (l)	$ -
561.3 Load Dispatch Trans Service & Scheduling	Page 7, Lines 26 (l)	$ -
561.4 Scheduling System Control and Dispatch Services	Page 7, Lines 27 (l)	$ -
561.5 Reliability Planning	Page 7, Lines 28 (l)	$ -
561.6 Transmission Service	Page 7, Lines 29 (l)	$ -
561.7 Generation Interconnect Studies	Page 7, Lines 30 (l)	$ -
Form 1 (561.1-561.7)		$ -
Less amounts:		
Control center assets included in Transmission Service Revenue Requirement	Company Records	$ -
Reliability Council fees related to retail service	Company Records	$ -
Scheduling fees paid for off-system sales	Company Records	$ -
Load Dispatch and Scheduling Expense included in Schedule 1		$ -

Duke Energy Carolinas, LLC

OATT Transmission Rate Formula Template Using Form 1-Data Using Actual Cost Data for 20xx with Average Ratebase Balances

True Up from Billing Period to be Included in Projected ATRR for 20xx

DEC- Historic Rate
Attachment R

Line		Reference		Amount
Revenue Requirement True-Up - Network Service				
1	Actual Amount Billed to Customers	Company Records	$	-
2	Actual Amount Owed by Customers	Amounts Owed Worksheet	$	-
3	Actual ATRR True Up Amount (Over Recovery = negative; Under Recovery = positive)	Line 2 - Line 1	$	-
4	Interest True Up Amount	Interest Worksheet	$	-
5	Network Service Load Ratio Share Percentage	Amounts Owed Worksheet		0.0000%
6	Total ATRR True Up Amount (Network)	(Line 3 + Line 4) / Line 5	$	-
Revenue Requirement True-Up - Point to Point Service (Long Term Firm)				
7	Actual PTP Reservation Quantities	Amounts Owed Worksheet		-
8	Actual Point to Point Rate	Amounts Owed Worksheet	$	-
9	Projected Point to Point Rate	DEC-Projected Rate, Page 1 Line 19		
10	Point to Point Price Variance	Line 8 - Line 9	$	-
11	ATRR True Up Amount (PTP)	Line 10 * Line 7	$	-
12	Interest True Up Amount	Interest Worksheet	$	-
13	PTP Load Ratio Share Percentage	Amounts Owed Worksheet		0.0000%
14	Total ATRR True Up Amount (PTP)	(Line 11 + Line 12) / Line 13	$	-

Interest Calculation

FERC Quarterly Interest Rate*

Monthly Interest Rate

15	January _ 20xx	-	0.00%
16	February	-	0.00%
17	March	-	0.00%
18	April	-	0.00%
19	May	-	0.00%
20	June	-	0.00%
21	July	-	0.00%
22	August	-	0.00%
23	September	-	0.00%
24	October	-	0.00%
25	November	-	0.00%
26	December	-	0.00%
27	January _ 20xx	-	0.00%
28	February	-	0.00%
29	March	-	0.00%
30	Average Monthly Interest Rate		0.00%

***** The interest is calculated using the interest rate posted on the FERC website
http://www.ferc.gov/legal/acct-matts/interest-rates

Duke Energy Carolinas, LLC

DEC-Historic Rate
Attachment S1

Schedule 1 Duke Energy Carolinas Revenue Requirements

Reference	Account	GL Balance 12/31/20xx Dr(Cr)	Amounts Related to System Operating Center	GL Balance 12/31/20xx Dr(Cr)	Amounts Related to System Operating Center	Remaining General Plant
Page 7, Line 58 (i), (l)	(389) Land and Land Rights	$ -	$ -	$ -	$ -	$ -
Page 7, Line 59 (i), (l)	(390) Structures and Improvements	$ -	$ -	$ -	$ -	$ -
Page 7, Line 60 (i), (l)	(391) Office Furniture and Equipment	$ -	$ -	$ -	$ -	$ -
Page 7, Line 61 (i), (l)	(392) Transportation Equipment	$ -	$ -	$ -	$ -	$ -
Page 7, Line 62 (i), (l)	(393) Stores Equipment	$ -	$ -	$ -	$ -	$ -
Page 7, Line 63 (i), (l)	(394) Tools, Shop and Garage Equipment	$ -	$ -	$ -	$ -	$ -
Page 7, Line 64 (i), (l)	(395) Laboratory Equipment	$ -	$ -	$ -	$ -	$ -
Page 7, Line 65 (i), (l)	(396) Power Operated Equipment	$ -	$ -	$ -	$ -	$ -
Page 7, Line 66 (i), (l)	(397) Communication Equipment	$ -	$ -	$ -	$ -	$ -
Page 7, Line 67 (i), (l)	(398) Miscellaneous Equipment	$ -	$ -	$ -	$ -	$ -
Page 7, Line 68 (i), (l)	(399) Other Tangible Property	$ -	$ -	$ -	$ -	$ -
Page 7, Line 7 (i), (l)	(399.1) Asset Retirement Costs for General Plant	$ -	$ -	$ -	$ -	$ -
Page 7, Line 6 (i), (l)	Total General Plant	$ -	$ -	$ -	$ -	$ -

Duke Energy Carolinas, LLC
OATT Transmission Rate Formula Template Using Form 1-Data
Using Actual Cost Data for (20xx) with Average Ratebase Balances
True Up from Billing Period to be Included in Projected Schedule 1 ARR

DEC- Historic Rate
Attachment S2

Revenue Requirement True-Up - Network Service

2	Actual Amount Billed to Customers	Company Records	$	-
3	Actual Amount Owed by Customers	Amounts Owed Worksheet Sch 1	$	-
4	Actual Schedule 1 ARR Adjustment (Over Recovery = Credit; Under Recovery = Debit)		$	-
5	Interest True Up Amount	Interest Worksheet	$	-
6	Network Service Load Ratio Share Percentage	Amounts Owed Worksheet Sch 1		0.00%
7	Total Schedule 1 ARR True Up (Network)	(Line 4 + Line 5) / Line 6	$	-

Revenue Requirement True-Up - Point to Point Service (Long Term Firm)

8	Actual PTP Reservation Quantities	Amounts Owed Worksheet Sch 1	$	-
9	Actual Point to Point Rate	Amounts Owed Worksheet Sch 1	$	-
10	Projected Point to Point Rate	DEC-Projected Rate, Page 6 Line 26 (prior year)	$	-
11	Point to Point Price Variance	Line 9 - Line 10	$	-
12	Schedule 1 ARR True Up (PTP)	Line 11 * Line 8	$	-
13	Interest True Up Amount	Interest Worksheet	$	-
14	PTP Load Ratio Share Percentage	Amounts Owed Worksheet Sch 1		0.00%
15	Total Schedule 1 ARR True Up (PTP)	(Line 12 + Line 13) / Line 14	$	-

	Interest Calculation	**FERC Quarterly Interest Rate***	**Monthly Interest Rate**
16	January _ 20xx	-	0.00%
17	February	-	0.00%
18	March	-	0.00%
19	April	-	0.00%
20	May	-	0.00%
21	June	-	0.00%
22	July	-	0.00%
23	August	-	0.00%
24	September	-	0.00%
25	October	-	0.00%
26	November	-	0.00%
27	December	-	0.00%
28	January_ 20xx	-	0.00%
29	February	-	0.00%
30	March	-	0.00%
31	Average Monthly Interest Rate		0.00%

* The interest is calculated using the interest rate posted on the FERC website
http://www.ferc.gov/legal/acct-matts/interest-rates

Duke Energy Carolinas, LLC
Transmission Rate Formula Support
Utilizing Historic Cost Data for (20XX) with Year-End Average Balances
Accumulated Excess/ Deficient Deferred Income Tax Balances

DEC- Historic Rate
Attachment T

Item [1]	12/31/20XX Balance (Dr)Cr	12/31/20XX+1 Balance (Dr)Cr	Average Balance	Allocation Type	Allocation Factor	OATT Amount	Comments
Regulatory Assets for Deficient ADIT – Protected				Other	Note [2]		
Regulatory Assets for Deficient ADIT – Unprotected PPE				Other	Note [2]		
Regulatory Assets for Deficient ADIT – Unprotected Non-PPE				Other	Note [2]		
Regulatory Liabilities for Excess ADIT – Protected				Other	Note [2]		
Regulatory Liabilities for Excess ADIT – Unprotected PPE				Other	Note [2]		
Regulatory Liabilities for Excess ADIT – Unprotected Non-PPE				Other	Note [2]		
Net Deficient/ Excess ADIT Rate Base	$ -	$ -	$ -			$ -	

Item [1]	Historic Rate Collection/ Amortization (Dr)Cr	Allocation Type	Allocation Factor	OATT Amount	Comments
Collection of Deficient Deferred Tax Expense – Protected		Other	Note [2]		
Collection of Deficient Deferred Tax Expense – Unprotected PPE		Other	Note [2]		
Collection of Deficient Deferred Tax Expense – Unprotected Non-PPE		Other	Note [2]		
Amortization of Excess Deferred Tax Expense – Protected		Other	Note [2]		
Amortization of Excess Deferred Tax Expense – Unprotected PPE		Other	Note [2]		
Amortization of Excess Deferred Tax Expense – Unprotected Non-PPE		Other	Note [2]		
Net Deficient/ Excess Tax Expense	$ -			$ -	

Notes:
[1] Excess/Deficient Deferred Tax Expense shall equal the return or collection of excess or deficient deferred taxes as shown in Attachments U, V, and W of this file. The return or collection of excess or deficient deferred taxes that result from any future federal or state income tax rate change, will be presented in the format of Attachment X, which DEC will populate and provide subsequent to such tax change.
[2] The allocation factor to be applied to the 2017 TCJA balances is 0.09658 and is based on the historic net plant allocation factor as filed in the 2018 annual update. DEC proposes to use the historical net plant allocation factor for the year of the tax rate change for Excess/Deficient Deferred Income Tax balances created due to future tax rate changes. The allocation factor applied to the future tax rate changes will be identified in a new sentence added to this Note.

Duke Energy Carolinas, LLC

Protected Federal Excess Deferred Tax Worksheet[1]

	Dr./(Cr.) **190**	*Dr./(Cr.)* **282**	*Dr./(Cr.)* **283**	*Dr./(Cr.)* **Total**
Pre-Remeasurement ADIT	8,942,835	(3,760,964,608)	0	(3,752,021,773)
Post Remeasurement ADIT	428,377,724	(2,368,804,236)	0	(1,940,426,512)
ADIT Remeasurement	419,434,889	1,392,160,372	0	1,811,595,261
Offset (Dr.)/Cr. [7] **TCJA Remeasurement**	*Dr./(Cr.)* **190**	*Dr./(Cr.)* **282**	*Dr./(Cr.)* **283**	*Dr./(Cr.)* **Total**
182.3 (Excluding Gross Up)	0	0	0	0
254 Gross Up [2]	423,012,023	0	0	423,012,023
Balance Sheet Only Total [3]	423,012,023	0	0	423,012,023
Deferred Credit	0	0	0	0
Deferred Debit	0	0	0	0
182.3	0	0	0	0
Deferred Credit	0	1,392,160,372	0	1,392,160,372
Deferred Debit	(3,577,134)	0	0	(3,577,134)
254	(3,577,134)	1,392,160,372	0	1,388,583,238
EDIT Liability Total	**(3,577,134)**	**1,392,160,372**	**0**	**1,388,583,238**
Debit	*0*	*0*	*0*	*0*
Credit	*0*	*0*	*0*	*0*
411.2	0	0	0	0
Def Inc Tax Exp Total [3]	0	0	0	0
Total Change in ADIT	**419,434,889**	**1,392,160,372**	**0**	**1,811,595,261**

			Projected Rate				Historic					
			(A) x (System-level balance)		(C-(D+E))				(A) x (System-level balance)		(H-(I+J))	
(A) **Amortization Rate** [4]	**(B)** **Year (Rate Year)** [5]	**(C)** **Beginning Year Balance**	**(D)** **Current Year Excess ADIT Liabilities Amortization - 411.1** [6]	**(E)** **Current Year Deficient ADIT Assets Amortization - 410.1** [6]	**(F)** **Remaining Balance**	**Gross-up Remaining Unamortized Bal.** [8]	**(G)** **Calendar Year**	**(H)** **Beginning Year Balance**	**(I)** **Current Year Excess ADIT Liabilities Amortization - 411.1** [6]	**(J)** **Current Year Deficient ADIT Assets Amortization - 410.1** [6]	**(K)** **Remaining Balance**	**Gross-up Remaining Unamortized Bal.** [8]
2.43%	Year 1 (June 20 - May 21)	1,388,583,238	33,742,573	0	1,354,840,665	412,732,830	2020	1,388,583,238	19,683,167	0	1,368,900,070	417,015,827
3.55%	Year 2 (June 21 - May 22)	1,354,840,665	49,294,705	0	1,305,545,960	397,715,903	2021	1,368,900,070	42,814,650	0	1,326,085,420	403,972,956
2.86%	Year 3 (June 22 – May 23)	1,305,545,960	39,713,481	0	1,265,832,479	385,617,759	2022	1,326,085,420	43,705,657	0	1,282,379,763	390,658,653

(1) The return of the protected portion of excess Federal ADIT generated by the 2017 Tax Cuts and Jobs Act will begin effective June 1, 2020 and continue through the term of the contract using the agreed upon methodology until the balance in the Remaining Balance column is $0.

(2) Represents Gross Up on Excess/ Deficient Deferred Income Tax balance to be returned to/ collected from customers.

(3) The Balance Sheet Only and Def Inc Tax Exp sections do not affect OATT rate base or the OATT revenue requirement. These are provided for Order 864 compliance purposes only.

(4) Represents the estimated ARAM rate per DEC's PowerTax system. Revised ARAM rates are calculated each year. DEC will use the best available ARAM rate when setting the annual billing rate each year. The “best available” ARAM means the ARAM rate based on the last filed final Federal Corporate income tax return, after all permitted Federal extensions for DEC, as of the date of the posting of the Annual Update, prior to the start of the Annual Update review process. An updated schedule reflecting the revised ARAM rate will be provided each year as part of each annual true-up.

(5) The total number of years necessary for the return of the protected portion of excess Federal ADIT to customers will be determined by the ARAM rate, which will change over time.

(6) Note, amortization for the first year of the EDIT return will reflect the initial mid-year start date of June 1, 2020 with 7 months of amortization recognized in year 1. Deficient Deferred Income Tax Assets for all years will be amortized to account 410.1. Excess Deferred Income Tax Liabilities for all years will be amortized to account 411.1. The ADIT source account for amortization is determined based on the proportion of the ADIT balance that was transferred to the "EDIT Liability Total" row. All subsequent calendar years post Year 1 will also reflect the 7-month/5-month in the calculation of Columns (I) and (J) for the “Calendar Year Remaining Balances” in Column (K).

(7) Amounts reported on this schedule reflect activity to the originating ADIT account. Reverse the sign to determine activity to the offsetting account (e.g., a Debit to account 282, would be offset with a Credit to 254).

(8) Unamortized Gross-up balance is subject to future changes in corporate income tax rate, which may change the unamortized gross-up amounts. DEC will calculate the Gross-up on the Remaining Unamortized Balance using the current deferred income tax rate as part of the annual update file each May.

Duke Energy Carolinas, LLC

Unprotected PP&E Federal Excess Deferred Tax Worksheet[1]

	Dr./(Cr.)	*Dr./(Cr.)*	*Dr./(Cr.)*	*Dr./(Cr.)*
	190	**282**	**283**	**Total**
Pre-Remeasurement ADIT	0	(2,399,696,138)	0	(2,399,696,138)
Post Remeasurement ADIT	270,599,547	(1,511,423,523)	0	(1,240,823,976)
ADIT Remeasurement	270,599,547	888,272,615	0	1,158,872,162
Offset (Dr.)/Cr. [5]	*Dr./(Cr.)*	*Dr./(Cr.)*	*Dr./(Cr.)*	*Dr./(Cr.)*
TCJA Remeasurement	**190**	**282**	**283**	**Total**
182.3 (Excluding Gross Up)	0	0	0	0
254 Gross Up [2]	270,599,547	0	0	270,599,547
Balance Sheet Only Total [3]	270,599,547	0	0	270,599,547
Deferred Credit	0	0	0	0
Deferred Debit	0	0	0	0
182.3	0	0	0	0
Deferred Credit	0	1,097,789,560	0	1,097,789,560
Deferred Debit	0	(209,516,945)	0	(209,516,945)
254	0	888,272,615	0	888,272,615
EDIT Liability Total	**0**	**888,272,615**	**0**	**888,272,615**
Debit	*0*	*0*	*0*	*0*
Credit	*0*	*0*	*0*	*0*
411.2	0	0	0	0
Def Inc Tax Exp Total [3]	0	0	0	0
Total Change in ADIT	**270,599,547**	**888,272,615**	**-**	**1,158,872,162**

Projected							Historic					
			(A) x (System-level balance)		(C-(D+E))				(A) x (System-level balance)		(H-(I+J))	
(A)	**(B)**	**(C)**	**(D)**	**(E)**	**(F)**	**Gross-up**	**(G)**	**(H)**	**(I)**	**(J)**	**(K)**	**Gross-up**
Amortization		**Beginning year**	**Current Year**	**Current Year**	**Remaining**	**Remaining**		**Beginning Year**	**Current Year**	**Current Year**	**Remaining**	**Remaining**
Rate (20 Years)	**Year (Rate Year)**	**balance**	**Excess ADIT Liabilities Amortization - 411.1 [4]**	**Deficient ADIT Assets Amortization - 410.1 [4]**	**Balance**	**Unamortized Bal. [6]**	**Calendar Year**	**Balance**	**Excess ADIT Liabilities Amortization - 411.1 [4]**	**Deficient ADIT Assets Amortization - 410.1 [4]**	**Balance**	**Unamortized Bal. [6]**
5.00%	Year 1 (June 20 - May 21)	888,272,615	44,413,631	0	843,858,984	257,069,570	2020	888,272,615	25,907,951	0	862,364,664	262,707,060
5.00%	Year 2 (June 21 - May 22)	843,858,984	44,413,631	0	799,445,354		2021	862,364,664	44,413,631	0	817,951,033	
5.00%	Year 3 (June 22 - May 23)	799,445,354	44,413,631	0	755,031,723		2022	817,951,033	44,413,631	0	773,537,402	
5.00%	Year 4 (June 23 - May 24)	755,031,723	44,413,631	0	710,618,092		2023	773,537,402	44,413,631	0	729,123,771	
5.00%	Year 5 (June 24 - May 25)	710,618,092	44,413,631	0	666,204,461		2024	729,123,771	44,413,631	0	684,710,141	
5.00%	Year 6 (June 25 - May 26)	666,204,461	44,413,631	0	621,790,831		2025	684,710,141	44,413,631	0	640,296,510	
5.00%	Year 7 (June 26 - May 27)	621,790,831	44,413,631	0	577,377,200		2026	640,296,510	44,413,631	0	595,882,879	
5.00%	Year 8 (June 27 - May 28)	577,377,200	44,413,631	0	532,963,569		2027	595,882,879	44,413,631	0	551,469,248	
5.00%	Year 9 (June 28 - May 29)	532,963,569	44,413,631	0	488,549,938		2028	551,469,248	44,413,631	0	507,055,618	
5.00%	Year 10 (June 29 - May 30)	488,549,938	44,413,631	0	444,136,308		2029	507,055,618	44,413,631	0	462,641,987	
5.00%	Year 11 (June 30 - May 31)	444,136,308	44,413,631	0	399,722,677		2030	462,641,987	44,413,631	0	418,228,356	
5.00%	Year 12 (June 31 - May 32)	399,722,677	44,413,631	0	355,309,046		2031	418,228,356	44,413,631	0	373,814,725	
5.00%	Year 13 (June 32 - May 33)	355,309,046	44,413,631	0	310,895,415		2032	373,814,725	44,413,631	0	329,401,095	
5.00%	Year 14 (June 33 - May 34)	310,895,415	44,413,631	0	266,481,785		2033	329,401,095	44,413,631	0	284,987,464	
5.00%	Year 15 (June 34 - May 35)	266,481,785	44,413,631	0	222,068,154		2034	284,987,464	44,413,631	0	240,573,833	
5.00%	Year 16 (June 35 - May 36)	222,068,154	44,413,631	0	177,654,523		2035	240,573,833	44,413,631	0	196,160,202	
5.00%	Year 17 (June 36 - May 37)	177,654,523	44,413,631	0	133,240,892		2036	196,160,202	44,413,631	0	151,746,572	
5.00%	Year 18 (June 37 - May 38)	133,240,892	44,413,631	0	88,827,262		2037	151,746,572	44,413,631	0	107,332,941	
5.00%	Year 19 (June 38 - May 39)	88,827,262	44,413,631	0	44,413,631		2038	107,332,941	44,413,631	0	62,919,310	
5.00%	Year 20 (June 39 - May 40)	44,413,631	44,413,631	0	0		2039	62,919,310	44,413,631	0	18,505,679	
							2040	18,505,679	18,505,679	0	0	

(1) The unprotected PPE portion of excess Federal ADIT generated by the 2017 Tax Cuts and Jobs Act will be returned to customers over a 20 year period, effective June 1, 2020.

(2) Represents Gross Up on Excess/ Deficient Deferred Income Tax balance to be returned to/ collected from customers.

(3) The Balance Sheet Only and Def Inc Tax Exp sections do not affect OATT rate base or the OATT revenue requirement. These are provided for Order 864 compliance purposes only.

(4) Note, amortization for the first year of the EDIT return will reflect the initial mid-year start date of June 1, 2020 with 7 months of amortization recognized in year 1. Deficient Deferred Income Tax Assets for all years will be amortized to account 410.1. Excess Deferred Income Tax Liabilities for all years will be amortized to account 411.1. The ADIT source account for amortization is determined based on the proportion of the ADIT balance that was transferred to the "EDIT Liability Total" row.

(5) Amounts reported on this schedule reflect activity to the originating ADIT account. Reverse the sign to determine activity to the offsetting account (e.g., a Debit to account 282, would be offset with a Credit to 254).

(6) Unamortized Gross-up balance is subject to future changes in corporate income tax rate, which may change the unamortized gross-up amounts. DEC will calculate the Gross-up on the Remaining Unamortized Balance using the current deferred income tax rate as part of the annual update file each May.

Duke Energy Carolinas, LLC

Unprotected Non-PP&E Federal Excess Deferred Tax Worksheet[1]

	Dr./(Cr.)	*Dr./(Cr.)*	*Dr./(Cr.)*	*Dr./(Cr.)*	*Dr./(Cr.)*
	190	**282**	**283**	**236[2]**	**Total**
Pre-Remeasurement ADIT	2,818,158,435	(514,811,737)	(3,101,293,469)	0	(797,946,771)
Post Remeasurement ADIT	1,889,338,467	(306,813,611)	(1,853,039,410)	0	(270,514,554)
ADIT Remeasurement	(928,819,968)	207,998,125	1,248,254,059	0	527,432,217

Offset (Dr.)/Cr. [7]	*Dr./(Cr.)*	*Dr./(Cr.)*	*Dr./(Cr.)*	*Dr./(Cr.)*	*Dr./(Cr.)*
TCJA Remeasurement	**190**	**282**	**283**	**236[2]**	**Total**
182.3 (Excluding Gross Up)	0	208,714,242	222,028,701	0	430,742,943
253 (Excluding Gross Up)[3]	(18,024,732)	0	0	0	(18,024,732)
254 (Excluding Gross Up)	(120,265,493)	(4,731,551)	251,427	0	(124,745,617)
254 Gross Up [4]	58,163,037	0	0	0	58,163,037
Balance Sheet Only Total [5]	**(80,127,188)**	**203,982,691**	**222,280,128**	**0**	**346,135,631**
Deferred Credit	*0*	*0*	*0*		*0*
Deferred Debit	*0*	*0*	*0*		*0*
182.3	0	0	0		0
Deferred Credit	*15,556,565*	*0*	*1,030,652,960*		*1,046,209,525*
Deferred Debit	*(850,640,400)*	*0*	*(4,642,592)*		*(855,282,992)*
254	(835,083,836)	0	1,026,010,368		190,926,532
EDIT Liability Total	**(835,083,836)**	**0**	**1,026,010,368**		**190,926,532**
Debit	*17,639*	*4,429,710*	*0*	*0*	*4,447,349*
Credit	*(13,626,584)*	*(414,276)*	*(36,437)*	*(5,066,693)*	*(19,143,990)*
411.2	(13,608,945)	4,015,434	(36,437)	(5,066,693)	(14,696,641)
Def Inc Tax Exp Total[5]	**(13,608,945)**	**4,015,434**	**(36,437)**	**(5,066,693)**	**(14,696,641)**
Total Change in ADIT	**(928,819,968)**	**207,998,125**	**1,248,254,059**	**(5,066,693)**	**522,365,523**

Projected

			(A) x (System-level balance)		(C-(D+E))		Historic				(H-(I+J))	
(A)	**(B)**	**(C)**	**(D)**	**(E)**	**(F)**	**Gross-up**	**(G)**	**(H)**	**(I)**	**(J)**	**(K)**	**Gross-up**
Amortization Rate	**Year (Rate Year)**	**Beginning Year Balance**	**Current Year Excess ADIT Liabilities Amortization - 411.1 [6]**	**Current Year Deficient ADIT Assets Amortization - 410.1 [6]**	**Remaining Balance**	**Remaining Unamortized Bal. [8]**	**Calendar Year**	**Beginning Year Balance**	**Current Year Excess ADIT Liabilities Amortization - 411.1 [6]**	**Current Year Deficient ADIT Assets Amortization - 410.1 [6]**	**Remaining Balance**	**Remaining Unamortized Bal. [8]**
20.00%	Year 1 (June 20 - May 21)	190,926,532	38,185,306	0	152,741,226	46,530,430	2020	190,926,532	22,274,762	0	168,651,770	51,377,350
20.00%	Year 2 (June 21 - May 22)	152,741,226	38,185,306	0	114,555,919		2021	168,651,770	38,185,306	0	130,466,464	
20.00%	Year 3 (June 22 - May 23)	114,555,919	38,185,306	0	76,370,613		2022	130,466,464	38,185,306	0	92,281,157	
20.00%	Year 4 (June 23 - May 24)	76,370,613	38,185,306	0	38,185,306		2023	92,281,157	38,185,306	0	54,095,851	
20.00%	Year 5 (June 24 - May 25)	38,185,306	38,185,306	0	0		2024	54,095,851	38,185,306	0	15,910,544	
							2025	15,910,544	15,910,544	0	0	

(1) The unprotected non-PPE portion of excess Federal ADIT generated by the 2017 Tax Cuts and Jobs Act will be returned to customers over a 5 year period, effective June 1, 2020.

(2) The remeasurement to account 236 represents the revaluation of the federal benefit of state from 35% to 21% on an accrued state settlement.

(3) FERC account 253 held a gross-up of excess North Carolina deferred income taxes and at 12/31/17 the balance was remeasured from 35% to 21%.

(4) Represents Gross Up on Excess/ Deficient Deferred Income Tax balance to be returned to/ collected from customers.

(5) The Balance Sheet Only and Def Inc Tax Exp sections do not affect OATT rate base or the OATT revenue requirement. These are provided for Order 864 compliance purposes only.

(6) Note, amortization for the first year of the EDIT return will reflect the initial mid-year start date of June 1, 2020 with 7 months of amortization recognized in year 1. Deficient Deferred Income Tax Assets for all years will be amortized to account 410.1. Excess Deferred Income Tax Liabilities for all years will be amortized to account 411.1. The ADIT source account for amortization is determined based on the proportion of the ADIT balance that was transferred to the "EDIT Liability Total" row.

(7) Amounts reported on this schedule reflect activity to the originating ADIT account. Reverse the sign to determine activity to the offsetting account (e.g., a Debit to account 282, would be offset with a Credit to 254).

(8) Unamortized Gross-up balance is subject to future changes in corporate income tax rate, which may change the unamortized gross-up amounts. DEC will calculate the Gross-up on the Remaining Unamortized Balance using the current deferred income tax rate as part of the annual update file each May.

Duke Energy Carolinas, LLC

OATT Template - Generic - [Return/ Collection of Future Excess Deficient] Deferred Taxes - [Protected/Unprotected PPE/ Unprotected Non-PPE] Portion

	Dr./(Cr.)	*Dr./(Cr.)*	*Dr./(Cr.)*	*Dr./(Cr.)*	*Dr./(Cr.)*
	190	**282**	**283**	**XXX[1]**	**Total**
Pre-Remeasurement ADIT Balance					-
Post Remeasurement ADIT Balance					-
ADIT Remeasurement	-	-	-	-	-

Offset (Dr.)/Cr.	*Dr./(Cr.)*	*Dr./(Cr.)*	*Dr./(Cr.)*	*Dr./(Cr.)*	*Dr./(Cr.)*
Income Tax Remeasurement	**190**	**282**	**283**	**XXX[1]**	**Total**
182.3 (Excluding Gross Up)	-				-
254 (Excluding Gross Up)					-
254 Gross Up					-
Balance Sheet Only Total	**-**	**-**	**-**	**-**	**-**
					-
Deferred Debit					-
Deferred Credit					-
182.3	-	-	-		-
Deferred Debit					-
Deferred Credit					-
254	-	-	-		-
Excess/ Deficient DIT Total[2]	**-**	**-**	**-**	**-**	
Debit					
Credit					
Account XXX [1]					
Def Inc Tax Exp Total	-	-	-	-	-
Total Change in ADIT	-	-	-	-	-

	Projected						Historic					
			(A) x (System-level balance)		**(C-(D+E))**				**(A) x (System-level balance)**		**(H-(I+J))**	
(A)	**(B)**	**(C)**	**(D)**	**(E)**	**(F)**	**Gross-up**	**(G)**	**(H)**	**(I)**	**(J)**	**(K)**	**Gross-up**
Amortization Rate[3]	**Year (Rate Year)**	**Beginning year balance**	**Current year Excess ADIT Liabilities Amortization - 411.1[4]**	**Current year Deficient ADIT Assets Amortization - 410.1[4]**	**Remaining Balance**	**Remaining Unamortized Bal.**	**Calendar Year**	**Beginning Year Balance**	**Current Year Excess ADIT Liabilities Amortization - 411.1[4]**	**Current Year Deficient ADIT Assets Amortization - 410.1[4]**	**Remaining Balance**	**Remaining Unamortized Bal.**
	Year 1 (June 20XX - May 20XX+1)						20XX					
	Year 2 (June 20XX+1 - May 20XX+2)						20XX+1					

[1] Account will be populated with the account remeasured as a result of the Federal or State tax rate change and the amount will be the excess or deficient ADIT contained therein.

[2] The *[Protected/Unprotected PPE/Unprotected Non-PPE]* portion of *[excess/deficient]* ADIT generated by *[Insert Name of Federal or State Tax Law]* will be returned to or collected from customers over a [X] year period, effective [Insert Date]. The amortization period for unprotected excess or deficient ADIT will be no longer than a reasonable estimate of the average remaining lives of the underlying assets. If a future tax rate change requires the collection of deficient ADIT from customers, the amortization period will reasonably balance the [Company's] need to fund the tax liability against rate shock to customers. If the future tax rate change requires return of excess ADIT to customers, the amortization period will reasonably balance the benefits of returning excess ADIT to customers with the [Company's] cash flow and credit risks.

[3] The total number of years necessary for the *[return of the Protected portion of excess ADIT]* or *[recovery of the Protected portion of deficient ADIT]* to customers will be determined by the ARAM rate, which will change over time, or a methodology consistent with the tax normalization rules in place at the time of the tax rate change.

[4] Deficient Deferred Income Tax Assets for all years will be amortized to account 410.1. Excess Deferred Income Tax Liabilities for all years will be amortized to account 411.1.

Worksheet A (Interest calculation for True- Up of ATRR)

NETWORK	ATRR True up Line 3/12	Interest Rate	Number of Months	Interest	Balance due/owed
January (20xx)	$ -	0.00%	12	$ -	
February	$ -	0.00%	11	$ -	
March	$ -	0.00%	10	$ -	
April	$ -	0.00%	9	$ -	
May	$ -	0.00%	8	$ -	
June	$ -	0.00%	7	$ -	
July	$ -	0.00%	6	$ -	
August	$ -	0.00%	5	$ -	
September	$ -	0.00%	4	$ -	
October	$ -	0.00%	3	$ -	
November	$ -	0.00%	2	$ -	
December	$ -	0.00%	1	$ -	
	$ -			$ -	$ -
January - May (20xx)	$ -	0.00%	5	$ -	$ -

NETWORK	True Up plus Interest	Interest Rate	Total Interest	Amortization (Annuity)	Balance due/owed
June (20xx)	$ -	0.00%	$ -	$0	$ -
July	$ -	0.00%	$ -	$0	$ -
August	$ -	0.00%	$ -	$0	$ -
September	$ -	0.00%	$ -	$0	$ -
October	$ -	0.00%	$ -	$0	$ -
November	$ -	0.00%	$ -	$0	$ -
December	$ -	0.00%	$ -	$0	$ -
January	$ -	0.00%	$ -	$0	$ -
February	$ -	0.00%	$ -	$0	$ -
March	$ -	0.00%	$ -	$0	$ -
April	$ -	0.00%	$ -	$0	$ -
May	$ -	0.00%	$ -	$0	$ -
			$ -		

PTP	ATRR True up Line 11/12	Interest Rate	Number of Months	Interest	Balance due/owed
January (20xx)	$ -	0.00%	12	$ -	
February	$ -	0.00%	11	$ -	
March	$ -	0.00%	10	$ -	
April	$ -	0.00%	9	$ -	
May	$ -	0.00%	8	$ -	
June	$ -	0.00%	7	$ -	
July	$ -	0.00%	6	$ -	
August	$ -	0.00%	5	$ -	
September	$ -	0.00%	4	$ -	
October	$ -	0.00%	3	$ -	
November	$ -	0.00%	2	$ -	
December	$ -	0.00%	1	$ -	
	$ -			$ -	$ -
January - May (20xx)	$ -	0.00%	5	$ -	$ -

PTP	True Up plus Interest	Interest Rate	Total Interest	Amortization (Annuity)	Balance due/owed
June (20xx)	$ -	0.00%	$ -	$0	$ -
July	$ -	0.00%	$ -	$0	$ -
August	$ -	0.00%	$ -	$0	$ -
September	$ -	0.00%	$ -	$0	$ -
October	$ -	0.00%	$ -	$0	$ -
November	$ -	0.00%	$ -	$0	$ -
December	$ -	0.00%	$ -	$0	$ -
January	$ -	0.00%	$ -	$0	$ -
February	$ -	0.00%	$ -	$0	$ -
March	$ -	0.00%	$ -	$0	$ -
April	$ -	0.00%	$ -	$0	$ -
May	$ -	0.00%	$ -	$0	$ -
			$ -		

(Interest Calculation for True-Up of Schedule 1)

NETWORK -Schedule 1	Schedule 1 True up Line 4/12	Interest Rate	Number of Months	Interest	Balance due/owed
January (20xx)	$ -	0.00%	12	$ -	
February	$ -	0.00%	11	$ -	
March	$ -	0.00%	10	$ -	
April	$ -	0.00%	9	$ -	
May	$ -	0.00%	8	$ -	
June	$ -	0.00%	7	$ -	
July	$ -	0.00%	6	$ -	
August	$ -	0.00%	5	$ -	
September	$ -	0.00%	4	$ -	
October	$ -	0.00%	3	$ -	
November	$ -	0.00%	2	$ -	
December	$ -	0.00%	1	$ -	
	$ -			$ -	$ -
January - May (20xx)	$ -	0.00%	5	$ -	$ -

NETWORK	True Up plus Interest	Interest Rate	Total Interest	Amortization (Annuity)	Balance due/owed
June (20xx)	$ -	0.00%	$ -	$0	$ -
July	$ -	0.00%	$ -	$0	$ -
August	$ -	0.00%	$ -	$0	$ -
September	$ -	0.00%	$ -	$0	$ -
October	$ -	0.00%	$ -	$0	$ -
November	$ -	0.00%	$ -	$0	$ -
December	$ -	0.00%	$ -	$0	$ -
January	$ -	0.00%	$ -	$0	$ -
February	$ -	0.00%	$ -	$0	$ -
March	$ -	0.00%	$ -	$0	$ -
April	$ -	0.00%	$ -	$0	$ -
May	$ -	0.00%	$ -	$0	$ -
			$ -		

PTP - Schedule 1	Schedule 1 True up Line 12/12	Interest Rate	Number of Months	Interest	Balance due/owed
January (20xx)	$ -	0.00%	12	$ -	
February	$ -	0.00%	11	$ -	
March	$ -	0.00%	10	$ -	
April	$ -	0.00%	9	$ -	
May	$ -	0.00%	8	$ -	
June	$ -	0.00%	7	$ -	
July	$ -	0.00%	6	$ -	
August	$ -	0.00%	5	$ -	
September	$ -	0.00%	4	$ -	
October	$ -	0.00%	3	$ -	
November	$ -	0.00%	2	$ -	
December	$ -	0.00%	1	$ -	
	$ -			$ -	$ -
January - May (20xx)	$ -	0.00%	5	$ -	$ -

PTP - Schedule 1	True Up plus Interest	Interest Rate	Total Interest	Amortization (Annuity)	Balance due/owed
June (20xx)	$ -	0.00%	$ -	$0	$ -
July	$ -	0.00%	$ -	$0	$ -
August	$ -	0.00%	$ -	$0	$ -
September	$ -	0.00%	$ -	$0	$ -
October	$ -	0.00%	$ -	$0	$ -
November	$ -	0.00%	$ -	$0	$ -
December	$ -	0.00%	$ -	$0	$ -
January	$ -	0.00%	$ -	$0	$ -
February	$ -	0.00%	$ -	$0	$ -
March	$ -	0.00%	$ -	$0	$ -
April	$ -	0.00%	$ -	$0	$ -
May	$ -	0.00%	$ -	$0	$ -
			$ -		

Worksheet B (Calculation of Amounts Owed under Actual Transmission Revenue Requirement)

	Monthly demands:				Load Ratio Share Billing Demands				Network			Point to Point		
	Monthly system demand excl. network and firm PTP	Monthly network service demand	Monthly long term firm PTP reservations	Total	Monthly system demand excl. network and firm PTP	Monthly network service billing demand (excludes transmission losses)	Monthly long term firm PTP reservations	Total	Actual Monthly Revenue Requirement	LRS percentage	**Amount due based on actual ATRR**	Actual Monthly Point-to-Point Rate	PTP Reservation Quantities	**Amount due based on actual ATRR**
Jan (Historical year)	-	-	-	-										
Feb	-	-	-	-										
Mar	-	-	-	-										
Apr	-	-	-	-										
May	-	-	-	-										
Jun	-	-	-	-										
Jul	-	-	-	-										
Aug	-	-	-	-										
Sept	-	-	-	-										
Oct	-	-	-	-										
Nov	-	-	-	-										
Dec	-	-	-	-										
Jan (Projected Year)	-	-	-	-	-	-	-	-			$			
Feb	-	-	-	-	-	-	-	-			$			
Mar	-	-	-	-	-	-	-	-			$			
Apr	-	-	-	-	-	-	-	-			$			
May	-	-	-	-	-	-	-	-			$			
Jun	-	-	-	-	-	-	-	-			$			
Jul	-	-	-	-	-	-	-	-			$			
Aug	-	-	-	-	-	-	-	-			$			
Sept	-	-	-	-	-	-	-	-			$			
Oct	-	-	-	-	-	-	-	-			$			
Nov	-	-	-	-	-	-	-	-			$			
Dec	-	-	-	-	-	-	-	-			$			

-	0.0000%	$ -	$	-
-	0.0000%	$ -	$	-
-	0.0000%	$ -	$	-
-	0.0000%	$ -	$	-
-	0.0000%	$ -	$	-
-	0.0000%	$ -	$	-
-	0.0000%	$ -	$	-
-	0.0000%	$ -	$	-
-	0.0000%	$ -	$	-
-	0.0000%	$ -	$	-
-	0.0000%	$ -	$	-
-	0.0000%	$ -	$	-

-	$ -							
-	$ -							
-	$ -							
-	$ -							
-	$ -							
-	$ -							
-	$ -							
-	$ -							
-	$ -							
-	$ -							
-	$ -							
-	$ -							
Sum of Billing and System Demand for Projected Year		-	-	-	-	$ -	-	$ -
Load Ratio Share Percentages (Ratio of Customer Billing Demands to System Demands)			0.0000%		0.0000%			

Worksheet C (Calculation of Amounts Owed under Actual Schedule 1 Revenue Requirement)

	Monthly demands:				Load Ratio Share Billing Demands				Network			Point to Point		
	Monthly system demand excl. network and firm PTP	Monthly network service demand	Monthly long term firm PTP reservations	Total	Monthly system demand excl. network and firm PTP	Monthly network service billing demand (excludes transmission losses)	Monthly long term firm PTP reservations	Total	Actual Monthly Revenue Requirement	LRS percentage	**Amount due based on actual Schedule 1 RR**	Actual Monthly Point-to-Point Rate	PTP Reservation Quantities	**Amount due based on actual Schedule 1 RR**
Jan (Historical year)	-	-	-	-										
Feb	-	-	-	-										
Mar	-	-	-	-										
Apr	-	-	-	-										
May	-	-	-	-										
Jun	-	-	-	-										
Jul	-	-	-	-										
Aug	-	-	-	-										
Sept	-	-	-	-										
Oct	-	-	-	-										
Nov	-	-	-	-										
Dec	-	-	-	-										
Jan (Projected Year)	-	-	-	-	-	-	-	-	$ -	0.0000%	$ -	$ -	-	$ -
Feb	-	-	-	-	-	-	-	-	$ -	0.0000%	$ -	$ -	-	$ -
Mar	-	-	-	-	-	-	-	-	$ -	0.0000%	$ -	$ -	-	$ -
Apr	-	-	-	-	-	-	-	-	$ -	0.0000%	$ -	$ -	-	$ -
May	-	-	-	-	-	-	-	-	$ -	0.0000%	$ -	$ -	-	$ -
Jun	-	-	-	-	-	-	-	-	$ -	0.0000%	$ -	$ -	-	$ -
Jul	-	-	-	-	-	-	-	-	$ -	0.0000%	$ -	$ -	-	$ -
Aug	-	-	-	-	-	-	-	-	$ -	0.0000%	$ -	$ -	-	$ -
Sept	-	-	-	-	-	-	-	-	$ -	0.0000%	$ -	$ -	-	$ -
Oct	-	-	-	-	-	-	-	-	$ -	0.0000%	$ -	$ -	-	$ -
Nov	-	-	-	-	-	-	-	-	$ -	0.0000%	$ -	$ -	-	$ -
Dec	-	-	-	-	-	-	-	-	$ -	0.0000%	$ -	$ -	-	$ -
Sum of Billing and System Demand for Projected Year			-	-		-		-			$ -		-	$ -
Ratio of Customer Billing Demands to System Demands				0.00%				0.00%						

Duke Energy Carolinas, LLC
OATT Transmission Rate Formula Template Using Form 1-Data
Utilizing Historic Cost Data for (20xx) and Projected Net Plant at Year-End (20xx)
Summary of Rates

Line		Reference	Jan - May OATT Amount	June - Dec OATT Amount
1	**Gross Revenue Requirement**	Page 3, Line 33	$ -	$ -
	Revenue Credits:			
2	Acct 454 - Allocable to Transmission	Attachment G	$ -	$ -
3	Acct 456.1 - Net Trans. Rate Revenue Credit	Attachment I	$ -	$ -
4	**Total Revenue Credits**		$ -	$ -
5	**Interest Disbursed w/ Network Prepay Refunds**	Attachment J	$ -	$ -
6	**Revenue Requirement - Customer Owned Facilities**	Company Records	$ -	$ -
7	**[RESERVED]**		$ -	$ -
8	**Transmission Incentives**	Note T	$ -	$ -
9	**Total Transmission Revenue Requirement**	(Line 1 - Line 4 + Line 5 + Line 6 + Line 7+ Line 8)	$ -	$ -
10	**Transmission Loss Factor**	(1+Loss factor stated in OATT)	0.00%	0.00%
11	**Revenue Tax Factor**	Note U	1	1
12	**Annual Transmission Revenue Requirement before NC Excess ADIT Credit**	(Line 9 x Line 10)/Line 11	$ -	$ -
12A	**NC Excess ADIT Credit - System Basis**	Attachment K2 Annual Value/ Attachment K Line 10	$ -	$ -
12B	**Annual Transmission Revenue Requirement after NC Excess ADIT Credit**	Line 12 + Line 12A	$ -	$ -
13	**ATRR True up from previous year (Network)**	DEC - Historic Rate, ATRR True Up Line 6	$ -	$ -
14	**Projected Annual Transmission Revenue Requirement (Network)**	Line 12B + Line 13	$ -	$ -
15	**ATRR True up from previous year (PTP)**	DEC - Historic Rate, ATRR True Up Line 14	$ -	$ -
16	**Projected Annual Transmission Revenue Requirement (PTP)**	Line 12B + Line 15	$ -	$ -
17	**Divisor - 12 Month Average Transmission Peak**	Attachment K, Line 6 Total MW/12	$ -	$ -
18	**PTP Trans. Rev Req't Rate $/kW - Year**	Line 16 / Line 17 / 1000	$ -	$ -
19	**PTP Demand Rate $/kW- Mth**	Line 18/12	$ -	$
20	**Weekly Firm/Non-Firm PTP Rate $/kW - Week**	Line 18/ 52 weeks	$ -	$ -
	Daily Firm/Non-Firm PTP Rates ($/kW):			
21	On-Peak Days	Line 20 / 5 days	$ -	$ -
22	Off-Peak Days	Line 20 / 7 days	$ -	$ -
	Non-Firm Hourly PTP Rates ($/kW):			
23	On-Peak Hours	Line 21 / 16hrs	$ -	$ -
24	Off-Peak Hours	Line 22/ 24hrs	$ -	$ -

Duke Energy Carolinas, LLC
OATT Transmission Rate Formula Template Using Form 1-Data
Utilizing Historic Cost Data for (20xx) and Projected Net Plant at Year-End (20xx)
Development of Rate Base

Line	Rate Base:		Ending Balance	Allocation Type	Factor	OATT Amount
	Gross Plant In Service: (Note A and I)					
1	Production Plant	Page 7, Line 13 (l)	$ -	N/A		
1a	Production Contra AFUDC	Attachment P	$ -	N/A		
1b	Eliminate Production ARO	Page 7, Line 10 (l)	$ -	N/A		
1c	Electric Plant Purchased	Page 7, Line 31 (l) (Note Y)	$ -	N/A		
2	Transmission Plant	Page 7, Line 14 (l)	$ -	TP	0.000000	$ -
2a	Transmission Contra AFUDC	Attachment P	$ -	TP	0.000000	$ -
2b	Plus Capital Additions	Attachment R	$ -	TP/2	0.000000	$ -
3	Distribution Plant	Page 7, Line 15 (l)	$ -	N/A		
4	General Plant	Page 7, Line 16 (l)	$ -	OATT Labor	0.000000	$ -
4a	Eliminate General ARO	Page 7, Line 17 (l)	$ -	OATT Labor	0.000000	$ -
4b	Eliminate System Operating Center (SOC)	Schedule 1, Line 1	$ -	OATT Labor	0.000000	$ -
5	Intangible Plant	Page 7, Line 12 (l)	$ -			$ -
6	**Total Gross Plant**		$ -	GP=	0.000000	$ -
	Accumulated Depreciation					
7	Production Depr. Reserve	Page 7, Line 32 (l)	$ -	N/A		
7a	Production Contra AFUDC	Attachment P	$ -	N/A		
7b	Eliminate Production ARO Accum Depreciation	Attachment P (Note W)	$ -	N/A		
8	Transmission Depr. Reserve	Page 7, Line 33 (l)	$ -	TP	0.000000	$ -
8a	Transmission Contra AFUDC	Attachment P	$ -	TP	0.000000	$ -
8b	Plus Accumulated Depreciation on Capital Additions	Attachment R	$ -	TP	0.000000	$ -
9	Distribution Depr. Reserve	Page 7, Line 34 (l)	$ -	N/A		
10	General Depr. Reserve	Page 7, Line 35 (l)	$ -	OATT Labor	0.000000	$ -
10a	Eliminate General ARO Accum Depreciation	Attachment P (Note W)	$ -	OATT Labor	0.000000	$ -
10b	Eliminate SOC Accum Depreciation	Line 10 * Schedule 1, Line 36	$ -	OATT Labor	0.000000	$ -
11	Intangible Depr. Reserve	Page 7, Line 9 (l)	$ -			$ -
12	**Total Accumulated Depr.**		$ -			$ -
	Net Plant in Service					
13	Net Production Plant	Line (1:1c) - Line (7:7b)	$ -			$ -
14	Net Transmission Plant	Line (2:2b) - Line (8:8b)	$ -			$ -
15	Net Distribution Plant	Line 3 - Line 9	$ -			$ -
16	Net General Plant	Line (4:4b) - Line (10:10b)	$ -			$ -
17	Net Intangible Plant	Line 5 - Line 11	$ -			$ -
18	**Total Net Plant**		$ -	NP=	0.000000	$ -
	Adjustments to Rate Base - Deferred Taxes					
19	ADIT - 190	Page 7, Line 39 (l)	$ -		Attachment A	$ -
20	ADIT - 281	Page 7, Line 43 (l)	$ -		Attachment B	$ -
21	ADIT - 282 (Note O)	Page 7, Line 44 (l)	$ -		Attachment B	$ -
22	ADIT - 283	Page 7, Line 45 (l)	$ -		Attachment C	$ -
23	**Total Deferred Tax Adjustments**		$ -			$ -
	Adjustments to Rate Base - Other					
24	Accum Provision for P&B (182.3 & 228.3)	Attachment D and Attachment E		OATT Labor	0.000000	$ -
25	Pension Cost Adj (182.3 , 253, & 254)	Attachment D and Attachment F		OATT Labor	0.000000	$ -
25a	Net Excess/ Deficient Deferred Tax Adj (182.3 & 254)	Attachment T	$ -		Attachment T	$ -
26	Other Regulatory Assets (182.3)	Page 7, Line 38 (l)	$ -		Attachment D	$ -
27	Accum Provision for I&D (228.2)	Page 7, Line 2 (l)	$ -		Attachment E	$ -
28	Accum Provision for Prop Ins (228.1)	Page 7, Line 3 (l)	$ -		Attachment E	$ -
29	**Net Rate Base Adjustments**		$ -			$ -
30	**Plant Held For Future Use**	Note B				$ -
31	**CWIP for Transmission Projects**	Note P	$ -		50.000000	$ -
32	**Unamortized Abandoned Plant**	Note Q	$ -		0.000000	$ -
	Rate Base Adjustment - Network Upgrade Prepayment Balances (Note J)					
33	Balance - Network Prepayments	Attachment J		D/A	(1.000000)	$ -
34	Accrued Interest Balance	Attachment J		D/A	1.000000	$ -
34a	Reversal of Anson AFUDC per Settlement	Attachment J		D/A	1.000000	$ -
35	**Total Network Upgrade Prepayment Adjustments**		$ -			$ -
	Working Capital					
36	Cash Working Capital (1/8 O&M)	Page 3, Line 14 /8	$ -	TP	0.000000	$ -
37	Materials & Supplies - Transmission	Page 7, Line 36 (l)	$ -	TP	0.000000	$ -
38	Materials & Supplies - Stores Expense	Page 7, Line 37 (l)	$ -	OATT Labor	0.000000	$ -
39	Prepayments	13 Month Average Balance used	$ -	GP	-	$ -
40	**Total Working Capital**		$ -			$ -
41	**Rate Base (Sum of lines 18, 23,29,30,31,32,35 and 40)**		**$ -**			**$ -**

Duke Energy Carolinas, LLC

OATT Transmission Rate Formula Template Using Form 1-Data
Utilizing Historic Cost Data for (20xx) and Projected Net Plant at Year-End (20xx)
Development of Revenue Requirement

Line	Expenses	Reference	Total	Allocation Type	Allocation Factor	OATT Amount
	O&M Expense					
1	TOTAL Transmission Expenses	Page 7, Line 46 (l)	$ -			
2	Less Account 561.1, 561.2, 561.3, 561.4 & 565	Page 7, Lines 47-50, 54 (l)	$ -			
2a	Plus Costs Associated with Transmission Control Center (TCC) booked in above accounts	Schedule 1, Line 8a	$ -			
3	Net Transmission O&M		$ -	TP	0.000000	$ -
4	Total Admin & General Expenses	Page 7, Line 55 (l)	$ -			
4a	Post-Employment Benefits Other than Pension Expense included in line 4 for information only	Note L	$ -			
5	Less (924) Property Insurance	Page 7, Line 56 (l)	$ -			
6	Less (928) Regulatory Commission Expense	Page 7, Line 57 (l)	$ -			
7	Less (930.1) General Advertising Expenses	Page 7, Line 58 (l)	$ -			
8	Less Industry Dues, R&D and Nuc Assoc Exp	Page 7, Line 59 (l)	$ -			
9	Net Labor Related A&G		$ -	OATT Labor	0.000000	$ -
10	(924) Property Insurance	Page 7, Line 56 (l)	$ -	GP	0.000000	$ -
10a	Less Property Insurance allocated to SOC	Line 10 * Schedule 1, Line 39	$ -	GP	0.000000	$ -
11	Trans. Related Regulatory Expense	Page 7, Line 63 (l)	$ -	TP	0.000000	$ -
12	Trans. Related Advertising Expense	Note Z	$ -	D/A		$ -
13	omitted					
13a	omitted					
14	**Total O&M (Sum of lines 3, 9, and 10 thru 13a)**					**$ -**
	Depreciation Expense					
15	Transmission Depr. Expense	Page 7, Line 60 (l)	$ -	TP	0.000000	$ -
15a	Add Transmission Contra AFUDC	Attachment P	$ -	TP	0.000000	$ -
15b	Add Amortization of Abandoned Plant	Note Q	$ -	TP	0.000000	$ -
15c	Add Transmission Projected Depreciation Expense	Attachment R	$ -	TP	0.000000	$ -
16	General Depreciation Expense	Page 7, Line 61 (l)	$ -	OATT Labor	0.000000	$ -
16a	Less General Depreciation allocated to SOC	Line 16 * Schedule 1 Line 36	$ -	OATT Labor	0.000000	$ -
17	Intangible Amortization	Page 7, Line 62 (l)	$ -	Attachment N		$ -
18	Extraordinary Property Loss	Note R	$ -	TP	0.000000	$ -
19	**Total Depreciation**		$ -			$ -
	Taxes Other Than Income (Note C)					
20	Labor Related	Page 7, Line 40 (l)	$ -	OATT Labor	0.000000	$ -
21	Property Related	Page 7, Line 41 (l)- Note D	$ -	GP	0.000000	$ -
21a	Less Property Related allocated to SOC	Line 21 * Schedule 1, Line 39	$ -	GP	0.000000	$ -
22	**Total Other Taxes**		$ -			$ -
	Return					
23	Rate Base (Page 2, Line 40) * Rate of Return (Page 4, Line 24)					**$ -**
	Income Taxes					
24	NC/SC Composite	Note E	0.00%			
25	Federal		0.00%			
26	Composite T = State + (Federal *(1-State))		0.00%			
27	Tax Rev. Req't Factor = T/(1-T) * (1 - Wtd.Debt.Cost/R)		0.00%			
28	Tax Gross Up Factor = 1 / (1-T)		1.000			
29	Amortized ITC (Negative)	Page 7, Line 42 (l)	$ -			
29a	Net Excess/ Deficient Deferred Tax Expense	Attachment T	$ -			
30	Income Taxes Calculated (Line 23 * Line 27)		$ -			$ -
31	ITC Grossed Up Tax Adjustment (Line 28 * Line 29)		$ -	NP	0.000000	$ -
31a	EDIT Grossed Up Tax Adjustment (Line 28 * Line 29a)					$ -
32	**Total Income Taxes**					**$ -**
33	**TOTAL REVENUE REQUIREMENT (Sum of Lines 14, 19, 22, 23, and 32)**					**$ -**

Duke Energy Carolinas, LLC
OATT Transmission Rate Formula Template Using Form 1-Data
Utilizing Historic Cost Data for (20xx) and Projected Net Plant at Year-End (20xx)
Supporting Allocation Factor and Return Calculations

Line		Reference	Total	
	Transmission Plant Included in OATT Rate			
1	Total Transmission Plant	Page 2, Lines 2 thru 2b	$ -	
2	Less: Gen. Step-up Transformers and Interconnection Facilities	Note F	$ -	
3	Less: Transmission under 44KV	Page 7, Line 71 (l)	$ -	
3a	Less: New Radial Facilities	Note X	$ -	
4	Trans Plant for OATT Rate		$ -	
5	**TP Allocator (Line 4/Line1)**	Note G		0.0000%
	Labor Allocation Factor			
6	Total Direct Payroll - O&M Labor	Page 7, Line 66 (l), Note H	$ -	
7	A&G Labor	Page 7, Line 64 (l), Note H	$ -	
8	Adjusted Labor	(Line 6 - Line 7)	$ -	
9	Transmission O&M Labor	Page 7, Line 65 (l)	$ -	
10	**Trans Labor Factor (Line 9/Line 8)**			0.0000%
11	**OATT Labor Allocator (Line 5*Line 10)**			0.0000%
	Return and Capitalization:			
12	Long Term Interest Expense	Page 7, Line 8 (l)	$ -	
13	Net Long Term Interest Expense		$ -	
14	Long Term Debt	Page 7, Line 4 (l)	$ -	
15	Less Loss on Reacquired Debt	Page 7, Line 1 (l)	$ -	
16	Plus Gain on Reacquired Debt	Page 7, Line 7 (l)	$ -	
17	Net Long Term Debt		$ -	
	Common Stock Development			
18	Proprietary Capital	Page 7, Line 5 (l)	$ -	
19	Less Account 216.1	Page 7, Line 6 (l)	$ -	
20	Common Stock		$ -	
21	**Total Capitalization (Sum Lines 17 and 20)**		**$ -**	

	Summary Cap Structure (Note S)	Weight	Cost	Weighted Cost	
22	Long Term Debt	0.00%	0.00%		0.00%
23	Common Stock (Note V)	0.00%	10%		0.00%
24	**Overall Return:**				**0.00%**

Explanatory Notes

NOTES:

(A) Contra AFUDC adjustments may relate to inclusion of CWIP in rate base for retail jurisdictions but not wholesale, or inclusion of CWIP in rate base for wholesale jurisdiction but not retail.
(B) FERC Form 1 page 214 excluding non-transmission related items
(C) Excludes all income and gross receipts taxes. Labor related other taxes include FICA and unemployment taxes.
Property related taxes include county and local property, highway use, and intangible taxes.
(D) Includes percentage of SC Franchise tax that is related to property
(E) Determined by annual apportionment factors provided by Tax Department
(F) Analysis of Company records of Interconnection facilities built after March 15, 2000.

(G) The allocator "TP" is the percent of gross transmission plant that is OATT related, i.e., after removal of generator step-up and interconnection investments. It also serves as the basis for deriving the OATT transmission related labor from the Form 1 reported values.
(H) Excludes from the payroll reported on Form 1 page 354 amounts for which Duke Energy Carolinas is reimbursed by the Catawba Joint Owners
(I) Amounts in Gross Plant that are not provided by investor funds are excluded. These include FAS 109 and ARO
(J) Network upgrade balance - prepayments is a reduction to rate base, accrued interest balance is an increase to rate base and Anson AFUDC reversal is a reduction.
(K) Duke Energy Carolinas will retain 50% of net revenues consistent with *Pacific Gas and Electric Company, 90 FERC ¶ 61,314.*

(L) DEC will provide in connection with each Annual Update, a copy of the entire annual actuarial valuation report supporting the derivation of the annual Postretirement Benefits Other than Pensions ("PBOP") expense as charged to FERC account 926, and the amount of such expense included in Total Admin and General Expenses provided on Schedule 10-B, Exhibit B, page 3, line 4 of the Formula Rate. DEC will provide, in connection with each Annual Update, a worksheet that shows the actual PBOP expense components and calculation derivation (including, for each account to which PBOP expense is recorded, the account number, expense amount, description, calculation derivation and source).
(M) [RESERVED].
(N) [RESERVED].
(O) The Company only functionalizes Account 282 during annual tax return process. Will use most recent annual tax return reports to allocate account balance to correct functions.
(P) DEC must make a full section 205 filing at FERC before inputting or changing amounts associated with CWIP
(Q) DEC must make a full section 205 filing at FERC before inputting or changing amounts associated with abandoned plant
(R) DEC must make a full section 205 filing at FERC before inputting or changing amounts associated with extraordinary property loss
(S) ROE will be supported in the original filing and no change in ROE will be made absent a full section 205 filing at FERC.
Depreciation rates shown are fixed until changed as the result of a 205 filing at FERC.
(T) DEC must make the appropriate filing at FERC before inputting or changing amounts associated with Transmission Incentives
(U) Revenue Tax Rate shall equal 1.0 minus the applicable revenue or gross receipts tax rate(s) to which Duke is subject for the revenue or gross receipts that Duke receives under this agreement. This is subject to change upon the filing of a full section 205 rate case.
(V) The equity component of the capital structure will be capped at the 2009 year end level of 52.4%.
A full section 205 filing at FERC is required to change this stated value.
(W) Account 108.499 from general ledger
(X) "New Radial Facilities" shall have the meaning set forth in Schedule 10, Exhibit B, Formula Rate Principles, Section 11.0(iii)(1).
(Y) Represents production related items
(Z) Education and outreach expenses relating to transmission, for example siting or billing

Duke Energy Carolinas, LLC
OATT Transmission Rate Formula Template Using Form 1-Data
Utilizing Historic Cost Data for (20XX) and Projected Net Plant at Year-End (20XX)
Schedule 1 Duke Energy Carolinas Revenue Requirements

Line		Reference	20XX Ending Balance
1	System Operating Center (SOC)Gross Plant	Attachment S1	$ -
2	SOC Intangible Plant	Attachment L	$ -
3	Less: SOC Accumulated Depreciation Gross Plant	Page 2, Line 10b	$ -
4	Less: SOC Accumulated Depreciation Intangible Plant	Attachment M	$ -
5	**Total Net SOC**	Sum (Line 1: Line 4)	**$ -**
6	Working Capital	1/8 * [Line 13-Line 9-Line 10-Line 12]	
7	**Total Rate Base**	Line 5 + Line 6	
8	Total Load Dispatch & Scheduling Expense- Accounts 561.1 - 561.4	Attachment Q	$ -
8a	Less: Costs Associated with TCC	Attachment Q	$ -
8b	Less: NERC/SERC Fees related to Retail Load	Attachment Q	$ -
8c	Less: Scheduling Fees Associated with Off-system Sales	Attachment Q	$ -
9	Depreciation Expense on SOC	Page 3, Line 16 a	$ -
10	Amortization Expense on SOC	Attachment N	$ -
11	Property Insurance on SOC	Page 3, Line 10a	$ -
12	Property Related Taxes Other than Income on SOC	Page 3, Line 21a	$ -
13	**Total Expenses**	Sum (Line 8: Line 12)	**$ -**
14	Return on Rate Base	Line 7 *Page 4, Line 24	**$ -**
15	Income Taxes	Line 14*Page 3, Line 27	**$ -**
16	Total Revenue Requirement	Sum Line 13 + Line 14 + Line 15	**$ -**
17	Less: Non- Firm PTP Service Credit (prior year Sched 1 revenue from non-firm PTP transactions)	Attachment I	$ -
18	**Transmission Loss Factor**	(1+ Loss factor stated in OATT)	0%
19	**Projected Annual Revenue Requirement**	(Line 16 - Line 17) x Line 18	**$ -**
20	ARR True Up Amount from previous year (Network)	DEC Historical Rate - Schedule 1 True Up, Line 7	**$ -**
21	**Projected Annual Revenue Requirement (Network)**	Sum Line 19 + Line 20	**$ -**
22	ARR True Up Amount from previous year (PTP)	DEC Historical Rate - Schedule 1 True Up, Line 15	**$ -**
23	**Projected Annual Revenue Requirement (PTP)**	Line 19 + Line 22	**$ -**
24	12 Month Average Transmission Peak	Page 1, Line 17	-
25	Annual PTP Rate $/kW - Year	(Line 23 / Line 24/1000)	$ -
26	Annual PTP Rate $/kW - Mth	(Line 25/ 12)	$ -
27	Annual PTP Rate $/kW - Week	(Line 25/ 52)	$ -
28	Annual PTP Rate $/kW - Day	(Line 25 / 365)	$ -
29	Annual PTP Rate $/kW - Hour	(Line 25/ 8760)	$ -
	Daily Firm/Non-Firm PTP Rates ($/kW):		
30	On-Peak Days	Line 27 / 5 days	$ -
31	Off-Peak Days	Line 27 / 7 days	$ -
	Non-Firm Hourly PTP Rates ($/kW):		
32	On-Peak Hours	Line 30 / 16hrs	$ -
33	Off-Peak Hours	Line 31/ 24hrs	$ -
	SOC Allocation Factor Calculation		
34	SOC Gross Plant	Line 1	$ -
35	Gross General Plant	Page 2, Line 4	$ -
36	SOC GP Allocation Factor	Line 34 / Line 35	0.0000%
37	SOC Gross Plant	Line 1	$ -
38	System Gross Plant (Including SOC)	Page 2, Line 6 - Page 2, Line 4b	$ -
39	SOC System Allocation Factor	Line 37 / Line 38	0.0000%

Duke Energy Carolinas, LLC
OATT Transmission Rate Formula Template Using Form 1-Data
Utilizing Historic Cost Data for (Historic Years) with Year-End Average Balances
Transmission Rate Formula Support – List of Inputs from FERC Form-1

Col.	(a)	(b)	(c)	(d)	(e)	(f)	(g)	(h)	(i)	(j)	(k)	(l)	(m)
Line	Reference	Category	Page	Row	Prior Yr. Col.	Curr. Yr. Col.	Beginning Balance/ Prior Year Amount	Adjustments [1]	Beginning Balance / Prior Year Amount (Net of Adjustments)	Ending Balance/ Current Year Amount	Adjustments [1]	Ending Balance/ Current Year Amount (Net of Adjustments)	Adjustment Comment [2]
1	FERC Form 1, 111, 81, (d) & (c)	Loss on Reacquired Debt	111	81	d	c							
2	FERC Form 1, 112, 28, (d) & (c)	Accum Provision for I&D	112	28	d	c							
3	FERC Form 1, 112, 27, (d) & (c)	Accum Provision for Property Insurance	112	27	d	c							
4	FERC Form 1, 112, 24, (d) & (c)	Total Long-Term Debt	112	24	d	c							
5	FERC Form 1, 112, 16, (d) & (c)	Proprietary Captial	112	16	d	c							
6	FERC Form 1, 112, 12, (d) & (c)	Unappropriated Undistributed Sub Earnings	112	12	d	c							
7	FERC Form 1, 113, 61, (d) & (c)	Unamortized Gain on Reacquired Debt	113	61	d	c							
8	FERC Form 1, 117, 62-67, (d) & (c)	Long Term Interest Expense	117	62-67	d	c							
9	FERC Form 1, 200, 21, (c)	Intangible Depreciation Reserve	200	21	na	c							
10	FERC Form 1, 204-205, 15,24,34,44, (b) & (g)	Production ARO	204-205	15,24,34,44	b	g							
11	FERC Form 1, 206-207, 101, (b) & (g)	Plant Purchased (Sold)	206-207	101	b	g							
12	FERC Form 1, 204-205, 5, (b) & (g)	Intangible Plant	204-205	5	b	g							
13	FERC Form 1, 204-205, 46, (b) & (g)	Production Plant	204-205	46	b	g							
14	FERC Form 1, 206-207, 58, (b) & (g)	Transmission Plant	206-207	58	b	g							
15	FERC Form 1, 206-207, 75, (b) & (g)	Distribution Plant	206-207	75	b	g							
16	FERC Form 1, 206-207, 99, (b) & (g)	General Plant	206-207	99	b	g							
17	FERC Form 1, 206-207, 98, (b) & (g)	General Plant ARO	206-207	98	b	g							
18	FERC Form 1, 206-207, 86, (b) & (g)	(389) Land and Land Rights	206-207	86	b	g							
19	FERC Form 1, 206-207, 87, (b) & (g)	(390) Structures and Improvements	206-207	87	b	g							
20	FERC Form 1, 206-207, 88, (b) & (g)	(391) Office Furniture and Equipment	206-207	88	b	g							
21	FERC Form 1, 206-207, 89, (b) & (g)	(392) Transportation Equipment	206-207	89	b	g							
22	FERC Form 1, 206-207, 90, (b) & (g)	(393) Stores Equipment	206-207	90	b	g							
23	FERC Form 1, 206-207, 91, (b) & (g)	(394) Tools, Shop and Garage Equipment	206-207	91	b	g							
24	FERC Form 1, 206-207, 92, (b) & (g)	(395) Laboratory Equipment	206-207	92	b	g							
25	FERC Form 1, 206-207, 93, (b) & (g)	(396) Power Operated Equipment	206-207	93	b	g							
26	FERC Form 1, 206-207, 94, (b) & (g)	(397) Communication Equipment	206-207	94	b	g							
27	FERC Form 1, 206-207, 95, (b) & (g)	(398) Miscellaneous Equipment	206-207	95	b	g							
28	FERC Form 1, 206-207, 97, (b) & (g)	(399) Other Tangible Property	206-207	97	b	g							
29	FERC Form 1, 206-207, 98, (b) & (g)	(399.1) Asset Retirement Costs for General Plant	206-207	98	b	g							
30	FERC Form 1, 206-207, 99, (b) & (g)	Total General Plant	206-207	99	b	g							
31	FERC Form 1, 206-207, 101, (b) & (g)	Electric Plant Purchased/Sold	206-207	101	b	g							
32	FERC Form 1, 219, 20-24, (c)	Production Depreciation Reserve	219	20-24	na	c							
33	FERC Form 1, 219, 25, (c)	Transmission Depreciation Reserve	219	25	na	c							
34	FERC Form 1, 219, 26, (c)	Distribution Depreciation Reserve	219	26	na	c							
35	FERC Form 1, 219, 28, (c)	General Depreciation Reserve	219	28	na	c							
36	FERC Form 1, 227, 5 (assigned),8, (b) & (c)	Materials and Supplies- Transmission	227	5 (assigned),8	b	c							
37	FERC Form 1, 227, 16, (b) & (c)	Materials and Supplies- Stores	227	16	b	c							
38	FERC Form 1, 232, 44, (b) & (f)	Other Regulatory Assets	232	44	b	f							
39	FERC Form 1, 234, 18, (b) & (c)	ADIT (Account 190)	234	18	b	c							
40	FERC Form 1, 262-263, 5,17,27,30,31, (i)	Labor Related Taxes	262-263	5,17,27,30,31	na	i							
41	FERC Form 1, 262-263, 10,23,32, (i)	Property Related Taxes	262-263	10,23,32	na	i							
42	FERC Form 1, 266, 8, (f)	Amortized ITC	266	8	na	f							
43	FERC Form 1, 272-273, 17, (b) & (k)	ADIT (Account 281)	272-273	17	b	k							
44	FERC Form 1, 274-275, 9, (b) & (k)	ADIT (Account 282)	274-275	9	b	k							
45	FERC Form 1, 276-277, 19, (b) & (k)	ADIT (Account 283)	276-277	19	b	k							
46	FERC Form 1, 321, 112, (c) & (b)	Transmission O&M Expense	321	112	c	b							
47	FERC Form 1, 321, 85, (c) & (b)	561.1 Load Dispatch Reliability	321	85	c	b							
48	FERC Form 1, 321, 86, (c) & (b)	561.2 Load Dispatch Monitor and Operate Trans System	321	86	c	b							
49	FERC Form 1, 321, 87, (c) & (b)	561.3 Load Dispatch Trans Service & Scheduling	321	87	c	b							
50	FERC Form 1, 321, 88, (c) & (b)	561.4 Scheduling System Control and Dispatch Services	321	88	c	b							
51	FERC Form 1, 321, 89, (c) & (b)	561.5 Reliability Planning	321	89	c	b							
52	FERC Form 1, 321, 90, (c) & (b)	561.6 Transmission Service	321	90	c	b							
53	FERC Form 1, 321, 91, (c) & (b)	561.7 Generation Interconnect Studies	321	91	c	b							
54	FERC Form 1, 321, 96, (c) & (b)	Transmission of Electricity by Others	321	96	c	b							
55	FERC Form 1, 323, 197, (c) & (b)	A&G Expense	323	197	c	b							
56	FERC Form 1, 323, 185, (c) & (b)	Property Insurance	323	185	c	b							
57	FERC Form 1, 323, 189, (c) & (b)	Regulatory Commission Expense	323	189	c	b							
58	FERC Form 1, 323, 191, (c) & (b)	General Advertising Expense	323	191	c	b							
59	FERC Form 1, 335, 1-3, (b)	Industry Dues, R&D and Nuc Assoc Exp	335	1-3	na	b							
60	FERC Form 1, 336, 7, (f)	Depr. & Amort. -Transmission Plant	336	7	na	f							
61	FERC Form 1, 336, 10, (f)	Depr. & Amort. -General Plant	336	10	na	f							
62	FERC Form 1, 336, 1, (f)	Depr. & Amort. -Intangible Plant	336	1	na	f							
63	FERC Form 1, 350, 19, (b)	Annual FERC Billing	350	19	na	b							
64	FERC Form 1, 354, 27, (b)	A&G Labor	354	27	na	b							
65	FERC Form 1, 354, 21, (b)	Transmission O&M Labor	354	21	na	b							
66	FERC Form 1, 355, 65, (b)	O&M Labor	355	65	na	b							
67	FERC Form 1, 400, 17, (e)	Firm Network Service for Self	400	17	na	e							
68	FERC Form 1, 400, 17, (f)	Firm Network Service for Others	400	17	na	f							
69	FERC Form 1, 400, 17, (g)	Long Term PTP Reservations	400	17	na	g							
70	FERC Form 1, 400, 17, (j)	Other Service	400	17	na	j							
71	FERC Form 1, 423, 22.3, (l)	Transmission Less than 44kV	423.3	22	na	l							

Notes:
[1]: The Adjustments column provides for adjustments to Form 1 amounts, based on the application of clearly identified and supported information, to ensure that the correct amount is billed.
[2]: Describe each adjustment as necessary

Duke Energy Carolinas, LLC
Transmission Rate Formula Support

DEC-Projected Rate
Attachment A

Deferred Income Tax Balances - GL Account 190

Item [1]	GL Balance 12/31/20xx Dr(Cr)	Adjustment [2]	Adjusted 12/31/20xx GL Bal Dr(Cr)	Allocation Factor [3] Type	%	OATT Amount	Adjustment Comment [4]
Total GL Account 190	**$** -	$ -	**$** -			**$** -	

Notes:
[1]: Lines added as needed to accommodate all separately-listed items.
[2]: The Adjustments column provides for adjustments to Form 1 amounts, based on the application of clearly identified and supported information, to ensure that the correct amount is billed.
[3]: Types of Allocation Factors can include, but are not limited to, “OATT Labor”, “TP”, “NP”, “Production”, “Distribution” and “Company Records”.
[4]: Describe each adjustment as necessary.

Duke Energy Carolinas, LLC
Transmission Rate Formula Support

DEC-Projected Rate
Attachment B

Deferred Income Tax Balances - GL Account 281 and 282

Item [1]	GL Balance 12/31/20xx Dr(Cr)	Adjustment [2]	Adjusted 12/31/20xx GL Bal Dr(Cr)	Allocation [3] Type	Factor	OATT Amount	Adjustment Comment [4]
Total GL Account 281	**$ -**	$ -	**$ -**			**$ -**	

Item [1]	GL Balance 12/31/20xx Dr(Cr)	Adjustment [2]	Adjusted 12/31/20xx GL Bal Dr(Cr)	Allocation [3] Type	Factor	OATT Amount	Adjustment Comment [4]
Total GL Account 282	**$ -**	$ -	**$ -**			**$ -**	

Notes:
[1]: Lines added as needed to accommodate all separately-listed items.
[2]: The Adjustments column provides for adjustments to Form 1 amounts, based on the application of clearly identified and supported information, to ensure that the correct amount is billed.
[3]: Types of Allocation Factors can include, but are not limited to, “OATT Labor”, “TP”, “NP”, “Production”, “Distribution” and “Company Records”.
[4]: Describe each adjustment as necessary.

Duke Energy Carolinas, LLC
Transmission Rate Formula Support

DEC-Projected Rate
Attachment C

Deferred Income Tax Balances - GL Account 283

Item [1]	GL Balance 12/31/2011 Dr(Cr)	Adjustment [2]	Adjusted 12/31/20xx GL Bal Dr(Cr)	Allocation [3] Type	Factor	OATT Amount	Adjustment Comment [4]
Total GL Account 283	**$** -	$ -	**$** -			**$** -	

Notes:
[1]: Lines added as needed to accommodate all separately-listed items.
[2]: The Adjustments column provides for adjustments to Form 1 amounts, based on the application of clearly identified and supported information, to ensure that the correct amount is billed.
[3]: Types of Allocation Factors can include, but are not limited to, “OATT Labor”, “TP”, “NP”, “Production”, “Distribution” and “Company Records”.
[4]: Describe each adjustment as necessary.

Duke Energy Carolinas, LLC | **DEC-Projected Rate**

Transmission Rate Formula Support | **Attachment D**

Other Regulatory Assets - GL Account 182.3

Item	GL Balance 12/31/20xx Dr(Cr)	Allocation Type	Factor	OATT Amount
OPEB	$ -	OATT Labor	0.000000	$ -
Pension Cost Adj	$ -	OATT Labor	0.000000	$ -
Pension Non Qualified	$ -	Other	0.000000	$ -
Sub-Total GL Account 182.3	**$ -**			**$ -**

Duke Energy Carolinas, LLC

Transmission Rate Formula Support

Other Regulatory Assets - Acct 182.3

Item [1]	GL Balance 12/31/20xx Dr(Cr)	Allocation Type	Factor	OATT Amount
Gridsouth Investment NC Retail	$ -	Other	0.000000	$ -
Gridsouth Investment SC Retail	$ -	Other	0.000000	$ -
FAS 109	$ -	Other	0.000000	$ -
ARO	$ -	Other	0.000000	$ -
Vacation Accrual	$ -	Production	0.000000	$ -
Nantahala Rewind	$ -	Production	0.000000	$ -
Thorpe Rewind	$ -	Production	0.000000	$ -
Section 124	$ -	Other	0.000000	$ -
NC DSM Regulatory Asset	$ -	Other	0.000000	$ -
Allen Environmental Compliance	$ -	Production	0.000000	$ -
Energy Efficiency Program Cost Deferral -SC	$ -	Production	0.000000	$ -
Energy Efficiency Program Cost Deferral -NC	$ -	Production	0.000000	$ -
Renewable Energy & Energy Portfolio Cost Deferral	$ -	Production	0.000000	$ -
Pension Expense Deferral	$ -	Other	0.000000	$ -
Cliffside Deferral	$ -	Production	0.000000	$ -
Pension Non Qualified	$ -	Other	0.000000	$ -
Gridsouth Investment - Wholesale	$ -	Other	0.000000	$ -
Interest Rate Swap	$ -	Other	0.000000	$ -
Deferred VOP Expenses	$ -	Other	0.000000	$ -
Coastal Wind Project deferred costs - NC	$ -	Production	0.000000	$ -
Deferred Pension Expenses	$ -	Other	0.000000	$ -
Buck and Bridgewater Project deferred costs	$ -	Production	0.000000	$ -
Clemson Grant	$ -	Other	0.000000	$ -
Save-A-Watt program deferrals	$ -	Production	0.000000	$ -
Dan River & Cliffside 5 deferred costs	$ -	Production	0.000000	$ -
McGuire Uprates	$ -	Production	0.000000	$ -
Fukushima CyberSecurity	$ -	Production	0.000000	$ -
Nuclear Levelization	$ -	Production	0.000000	$ -
Billing System Deferral	$ -	Other	0.000000	$ -
Natural Gas Hedging - MTM	$ -	Other	0.000000	$ -
Rate Case Costs	$ -	Other	0.000000	$ -
Coal Ash Basin - ARO Deferral	$ -	Other	0.000000	$ -
Unbilled Fuel	$ -	Production	0.000000	$ -
SC Distributed Energy Resource Program	$ -	Other	0.000000	$ -
Rotable Fleet Spare	$ -	Production	0.000000	$ -
NCUC Regulatory Fee	$ -	Other	0.000000	$ -
Other Deferred Costs	$ -	Other	0.000000	$ -
Coal Ash Remediation Costs	$ -	Other	0.000000	$ -
Advanced Metering Infrastructure	$ -	Other	0.000000	$ -
Deferred Fuel	$ -	Production	0.000000	$ -
SubTotal GL Account 182.3	**$ -**			**$ -**
Total GL Account 182.3	**$ -**			**$ -**

Notes:

[1]: Lines added as needed to accommodate all separately-listed items.

Duke Energy Carolinas, LLC
Transmission Rate Formula Support

DEC-Projected Rate
Attachment E

Accumulated Provisions for Property Insurance - GL Account 228.1

	GL Balance 12/31/20xx Dr(Cr)	Allocation Type	Factor	OATT Amount
Property Insurance Reserve	$ -	GP	0.000000	$ -
Total GL Account 228.1	**$ -**			**$ -**

Duke Energy Carolinas, LLC
Transmission Rate Formula Support

Accumulated Provisions for Injuries and Damages - GL Account 228.2

	GL Balance 12/31/20xx Dr(Cr)	Allocation Type	Factor	OATT Amount
I and D Extraordinary	$ -	Other	0.000000	$ -
Environmental	$ -	NP	0.000000	$ -
Total GL Account 228.2	**$ -**			**$ -**

Duke Energy Carolinas, LLC
Transmission Rate Formula Support

Accumulated Provisions for Pensions and Benefits - GL Account 228.3

	GL Balance 12/31/20xx Dr(Cr)	Allocation Type	Factor	OATT Amount
DPC OPEB FAS 106	$ -	OATT Labor	0.000000	$ -
DPC Pos EMP FAS 112	$ -	OATT Labor	0.000000	$ -
DPC Pos EMP FAS 87 (Cinergy)	$ -	OATT Labor	0.000000	$ -
DPC Pension Liability (FAS 87)	$ -	OATT Labor	0.000000	$ -
Pension Rest	$ -	OATT Labor	0.000000	$ -
Total GL Account 228.3	**$ -**			**$ -**

Duke Energy Carolinas, LLC
Transmission Rate Formula Support

DEC-Projected Rate
Attachment F

Other Deferred Credits - GL Account 253

	GL Balance 12/31/20xx Dr(Cr)	Allocation Type	Factor	OATT Amount
Pension Cost Adj (ODC)	$ -	OATT Labor	0.000000	$ -
OPEB	$ -	OATT Labor	0.000000	$ -
Amounts Not Allocated to Transmission	$ -	Other	0.000000	$ -
Total GL Account 253	**$ -**			**$ -**

Other Regulatory Liabilities - GL Account 254

	GL Balance 12/31/20xx Dr(Cr)	Allocation Type	Factor	OATT Amount
Pension Cost Adj (ORL)	$ -	OATT Labor	0.000000	$ -
OPEB	$ -	OATT Labor	0.000000	$ -
Amounts Not Allocated to Transmission	$ -	Other	0.000000	$ -
Total GL Account 254	**$ -**			**$ -**

Duke Energy Carolinas, LLC
Transmission Rate Formula Support

DEC-Projected Rate
Attachment G

Account 454 Reconciliation - Rents

North Carolina [1]	Reference	Amount	Allocation [2] Type	Factor	OATT Amount
Total GL Account 454		**$ -**			**$ -**

Notes:
[1] Lines added as needed to accommodate all separately-listed items.

[2]: Types of Allocation Factors can include, but are not limited to, “OATT Labor”, “TP”, “NP”, “Production”, “Distribution” and “Company Records”.

Duke Energy Carolinas, LLC
Transmission Rate Formula Support

DEC-Projected Rate
Attachment H

Account 454.3 Reconciliation - Tower Lease Revenues

Line				
	Tower Lease Revenue Net Margin	**Reference**		**Amount**
1	Revenues -0454300	Attachment G	$	-
2	Less: Direct Costs	Company Records	$	-
3	Net Revenues Before Taxes	Line 1 - Line 2	$	-
4	Composite Tax Rate	Page 3, Line 26		0.00%
5	After Tax Net Revenues	Line 3 - (Line 3 * Line 4)	$	-
6	TP Allocator	Page 4, Line 5		0.00%
7	Adjusted Net Revenues	Line 5 * Line 6	$	-
8	Revenue Sharing Percent	Note K		50.00%
9	Revenue Credit Amount	Line 7 * Line 8	$	-
	Tower Lease Revenue Reported in Formula			
10	Revenues -0454300	Company Records	$	-
11	Less: Direct Costs	Line 2 * Page 4, Line 11	$	-
12	Net Revenues Before Taxes	Line 10 - Line 11	$	-
13	Composite Tax Rate	Page 3, Line 26		0.00%
14	After Tax Net Revenues	Line 12 - (Line 12*Line 13)	$	-
15	TP Allocator	Page 4, Line 5		0.00%
16	Adjusted Net Revenues	Line 14 * Line 15	$	-
17	Revenue Sharing Percent	Note K		50.00%
18	Revenue Credit Amount	Line 16 * Line 17	$	-
	Tower Lease Revenue Adjustment to Formula			
19	Revenue Credit	Line 9	$	-
20	Revenue Credit in other components of Formula	Line 18	$	-
21	Adjusted Revenue Credit	Line 19 - Line 20	$	-

Duke Energy Carolinas, LLC
Transmission Rate Formula Support

DEC-Projected Rate
Attachment I

Transmission of Electricity for Others

Form 1	Payment by	Classification	Demand Charges	Energy Charges	Ancillary/Other Revenue	Total Revenue
Reference [1]	(Column (a))	(Column (d))	(Column (k))	(Column (l))	(Column (m))	(Column (n))
			$ -	$ -	$ -	$ -
			$ -	$ -	$ -	$ -
			$ -	$ -	$ -	$ -
			$ -	$ -	$ -	$ -
			$ -	$ -	$ -	$ -
			$ -	$ -	$ -	$ -
Total Per Form 1			$ -	$ -	$ -	$ -

Total Point-to-Point (PTP_ Revenues and Ancillary Revenues	$	-
Add: Duke Energy Carolinas Bulk Power Marketing Transmission Revenues and Ancillary Revenues	$	-
Remove: Long-Term Firm PTP Transmission Revenues and Ancillaries	$	-
Remove: PTP Non-Firm and Short-Term Firm Schedule 2 and Loss Compensation Ancillary Revenues	$	-
Remove: PTP Non-Firm and Short-Term Firm PTP Schedule 1 Revenues	$	-
PTP Non-Firm and Short-Term Firm Revenues – Net of Ancillary Services	$	-

Notes:
[1]: Lines may be added or removed as needed to accommodate all separately-listed items on FERC Form 1 page 328.

Duke Energy Carolinas, LLC
Transmission Rate Formula Support

DEC-Projected Rate
Attachment J

Customer Prepayment for Network Upgrades Detail
[Name of Project]

Balances as of the Beginning of Year:

	Cash Payments	Accrued Interest	Total Liability
Beginning Balance	$ -	$ -	$ -
Allocation of Balance Refunds	0.00%	0.00%	

Test Year Refund History:

Allocation of Amount Refunded

Service Month	Amount Refunded	Current Interest	Cash Prepayment	Accrued Interest	Ending Liability Balance
1/1/20xx	$ -	$ -	$ -	$ -	$ -
2/1/20xx	$ -	$ -	$ -	$ -	$ -
3/1/20xx	$ -	$ -	$ -	$ -	$ -
4/1/20xx	$ -	$ -	$ -	$ -	$ -
5/1/20xx	$ -	$ -	$ -	$ -	$ -
6/1/20xx	$ -	$ -	$ -	$ -	$ -
7/1/20xx	$ -	$ -	$ -	$ -	$ -
8/1/20xx	$ -	$ -	$ -	$ -	$ -
9/1/20xx	$ -	$ -	$ -	$ -	$ -
10/1/20xx	$ -	$ -	$ -	$ -	$ -
11/1/20xx	$ -	$ -	$ -	$ -	$ -
12/1/20xx	$ -	$ -	$ -	$ -	$ -
	$ -	$ -	$ -	$ -	
Interest Disbursed	$ -	$ -		$ -	
Allocation of Ending Balance			$ -	$ -	$ -

AFUDC Reversal Calculation:

(1)	(2) = 12 / (1)	(3) = x / (2)	(4)=[1-(3)]*0
Depr. Rate	Avg. Depr. Life (Months)	% Depreciated 12/31/20xx	Net AFUDC Reversal
0.00%	0.000	0.000%	**0**

Duke Energy Carolinas, LLC **DEC-Projected Rate**
Transmission Rate Formula Support **Attachment K**

Wholesale Allocation Factor

	Wholesale Allocation Factor	**Reference**	
1	System Long Term Firm Transmission Peak Demand (MW)		
2	Firm Network Service for Self	Page 7, Line 67 (l)	-
3	Firm Network Service for Others	Page 7, Line 68 (l)	-
4	Long Term PTP Reservations	Page 7, Line 69 (l)	-
5	Other Service	Page 7, Line 70 (l)	-
6	Total System Long Term Firm Transmission Load Peak Demand	Sum (Line 2:Line 5)	-
7	Transmission Loss Factor from OATT	DEC OATT	0%
8	Firm Network Service for Others Adjusted for Losses	Line 3 / (1 + Line 7)	0
9	Total Firm Network Service for Others Adjusted for Losses + Long Term Firm PTP Reservations	Line 4 + Line 8	-
10	Peak Demand Allocation Factor	Line 9 / Line 6	0.0000%

Duke Energy Carolinas, LLC
Transmission Rate Formula Support

DEC-Projected Rate
Attachment K2

North Carolina Excess ADIT Wholesale Rate Credits ($)

FERC Docket No. ER19-_-000

Annual Update Year = (FF1 yyyy+1)	NC Excess ADIT Credit (Wholesale Basis)
2018	0
2019	646,974
2020	625,970
2021	605,159
2022	584,549
2023	564,149
2024	543,969
2025	524,018
2026	504,309

Note: For inclusion as a System Revenue Requirement Credit on Summary Tab Line 12b, the values shown above are grossed up using the annual Peak Demand Allocation Factor as calculated on Attachment K, Line 10.

Duke Energy Carolinas, LLC
Transmission Rate Formula Support

DEC-Projected Rate
Attachment L

Intangibles - Gross Plant - GL Accounts 302 and 303

Project Description [1]	GL Balance 12/31/20xx Dr(Cr)	Allocation [2] Type	Factor	OATT Amount
Total GL Account 302 and 303	**$ -**			**$ -**

Notes:
[1]: Lines may be added or removed as needed to accommodate all separately-listed items used to calculate the OATT Amount.
[2]: Types of Allocation Factors can include, but are not limited to, “OATT Labor”, “TP”, “NP”, “Production”, “Distribution” and “Company Records”.

Duke Energy Carolinas, LLC
Transmission Rate Formula Support

DEC-Projected Rate
Attachment M

Intangibles - Accumulated Amortization

Project Description [1]	GL Balance 12/31/20xx Dr(Cr)	Allocation [2] Type	Factor	OATT Amount
TOTAL Form 1, Page 200, Line 21	**$ -**			**$ -**

Notes:
[1]: Lines may be added or removed as needed to accommodate all separately-listed items used to calculate the OATT Amount.
[2]: Types of Allocation Factors can include, but are not limited to, “OATT Labor”, “TP”, “NP”, “Production”, “Distribution” and “Company Records”.

Duke Energy Carolinas, LLC
Transmission Rate Formula Support

DEC-Projected Rate
Attachment N

Intangibles - Amortization Expense

Project Description [1]	GL Balance 12/31/20xx Dr(Cr)	Allocation [2] Type	Factor	OATT Amount
TOTAL	**$ -**			**$ -**

Notes:
[1]: Lines may be added or removed as needed to accommodate all separately-listed items used to calculate the OATT Amount.
[2]: Types of Allocation Factors can include, but are not limited to, “OATT Labor”, “TP”, “NP”, “Production”, “Distribution” and “Company Records”.

Depreciation Rates by FERC Account are listed in DEC Rate Schedule No. 514.

Duke Energy Carolinas, LLC
Transmission Rate Base
Contra AFUDC Amounts Recorded Pursuant to CFR 35.25(f)(2)

DEC-Projected Rate
Attachment P

Description [1]	Contra AFUDC Amount	Commercial Operation Date	first yr. partial	deprec rate from CO date thru	deprec rate effective	weighted deprec rate year ending	number of years from CO date ending	accum deprec	annual depr expense year ending	accum deprec	annual depr expense beginning	number of years from 12/31/1991 ending	accum deprec	deprec rate effective	number of years from 12/31/2004 ending	accum deprec	annual depr expense year ending	accum deprec	deprec rate effective	annual depr expense year ending	accum deprec	deprec rate effective	annual depr expense year ending	accum deprec	deprec rate effective	annual depr expense year ending	accum deprec
			year	11/12/1991	11/13/1991	12/31/1991	12/31/1990	12/31/1990	12/31/1991	12/31/1991	1/1/1992	12/31/2004	12/31/2004	1/1/2005	12/31/2007	12/31/2007	12/31/2008	12/31/2008	1/1/2009	12/31/2009	12/31/2009	1/1/2010	12/31/2010	12/31/2010	1/1/20xx	12/31/20xx	12/31/20xx
								(B)*(E)*(H)	B*G	I+J	B*F		K+(L*M)			N+(C*O*P)	T-R	R+(C*P)		W-T	T+(C*U)		Z-W	W+(C*X)		AC-Z	Z+(C*AA)
Production contra afudc																											
	$0							$0	$0	$0	$0		$0			$0	$0	$0		$0	$0		$0	$0		$0	$0
	$0							$0	$0	$0	$0		$0			$0	$0	$0		$0	$0		$0	$0		$0	$0
	$0							$0	$0	$0	$0		$0			$0	$0	$0		$0	$0		$0	$0		$0	$0
Total	$0							$0	$0	$0	$0		$0			$0	$0	$0		$0	$0		$0	$0		$0	$0
Transmission contra afudc																											
	$0							$0	$0	$0	$0		$0			$0	$0	$0		$0	$0		$0	$0		$0	$0
	$0							$0	$0	$0	$0		$0			$0	$0	$0		$0	$0		$0	$0		$0	$0
	$0							$0	$0	$0	$0		$0			$0	$0	$0		$0	$0		$0	$0		$0	$0
Total	$0							$0	$0	$0	$0		$0			$0	$0	$0		$0	$0		$0	$0		$0	$0
Total contra afudc	$0							$0	$0	$0	$0		$0			$0	$0	$0		$0	$0		$0	$0		$0	$0
Account 0108499 - 20XX [1]																											
	$ -																										
	$ -																										
	$ -																										
	$ -																										
	$ -																										
	$ -																										
Total ARO	$ -																										

Notes:
[1]: Lines added as needed to accommodate all separately-listed items.

Duke Energy Carolinas, LLC

DEC-Projected Rate
Attachment Q

561.1- 561.4 Break Down

	Reference	Total
Total Accounts 561.1-561.4 (321.85.b:321.88.b)	Page 7, Lines 47-50 (l)	$ -
561.1 Load Dispatch Reliability	Page 7, Lines 47 (l)	$ -
561.2 Load Dispatch Monitor and Operate Trans System	Page 7, Lines 48 (l)	$ -
561.3 Load Dispatch Trans Service & Scheduling	Page 7, Lines 49 (l)	$ -
561.4 Scheduling System Control and Dispatch Services	Page 7, Lines 50 (l)	$ -
561.5 Reliability Planning	Page 7, Lines 51 (l)	$ -
561.6 Transmission Service	Page 7, Lines 52 (l)	$ -
561.7 Generation Interconnect Studies	Page 7, Lines 53 (l)	$ -
Form 1 (561.1-561.7)		$ -
Less amounts:		
Control center assets included in Transmission Service Revenue Requirement	Company Records	$ -
Reliability Council fees related to retail service	Company Records	$ -
Scheduling fees paid for off-system sales	Company Records	$ -
Load Dispatch and Scheduling Expense included in Schedule 1		$ -

Duke Energy Carolinas, LLC
Transmission Rate Formula Support

DEC-Projected Rate
Attachment R

Worksheet Supporting Transmission Plant in Service Additions

Calculation of Composite Depreciation Rate

1	Composite Depreciation Rate	8/1/2018 Depreciation Study		2.03%

Related Depreciation Expense Using 1/2 Year Convention

2	Projected Capital Additions*	Company Records	$	-
3	Total Depreciation Expense	(Line 1 * Line 2)	$	-
4	1/2 Year Depreciation Expense	Line 3 / 2	$	-

* represents (year) projected capital additions

Duke Energy Carolinas, LLC

DEC-Projected Rate
Attachment S1

Schedule 1 Duke Energy Carolinas Revenue Requirements

Reference	Account	GL Balance 12/31/20xx Dr(Cr)	Amounts Related to System Operating Center	Remaining General Plant
Page 7, Line 18 (l)	(389) Land and Land Rights	$ -	$ -	$ -
Page 7, Line 19 (l)	(390) Structures and Improvements	$ -	$ -	$ -
Page 7, Line 20 (l)	(391) Office Furniture and Equipment	$ -	$ -	$ -
Page 7, Line 21 (l)	(392) Transportation Equipment	$ -	$ -	$ -
Page 7, Line 22 (l)	(393) Stores Equipment	$ -	$ -	$ -
Page 7, Line 23 (l)	(394) Tools, Shop and Garage Equipment	$ -	$ -	$ -
Page 7, Line 24 (l)	(395) Laboratory Equipment	$ -	$ -	$ -
Page 7, Line 25 (l)	(396) Power Operated Equipment	$ -	$ -	$ -
Page 7, Line 26 (l)	(397) Communication Equipment	$ -	$ -	$ -
Page 7, Line 27 (l)	(398) Miscellaneous Equipment	$ -	$ -	$ -
Page 7, Line 28 (l)	(399) Other Tangible Property	$ -	$ -	$ -
Page 7, Line 29 (l)	(399.1) Asset Retirement Costs for General Plant	$ -	$ -	$ -
Page 7, Line 30 (l)	Total General Plant	$ -	$ -	$ -

Duke Energy Carolinas, LLC
Transmission Rate Formula Support

DEC- Projected Rate
Attachment T

Accumulated Excess/ Deficient Deferred Income Tax Balances

Item [1]	12/31/20XX Balance (Dr)Cr	Allocation Type	Factor	OATT Amount	Comments
Regulatory Assets for Deficient ADIT – Protected		Other	Note [2]		
Regulatory Assets for Deficient ADIT – Unprotected PPE		Other	Note [2]		
Regulatory Assets for Deficient ADIT – Unprotected Non-PPE		Other	Note [2]		
Regulatory Liabilities for Excess ADIT – Protected		Other	Note [2]		
Regulatory Liabilities for Excess ADIT – Unprotected PPE		Other	Note [2]		
Regulatory Liabilities for Excess ADIT – Unprotected Non-PPE		Other	Note [2]		
Net Deficient/ Excess ADIT Rate Base	$ -			$ -	

Item [1]	Projected Rate Collection/ Amortization (Dr)Cr	Allocation Type	Factor	OATT Amount	Comments
Collection of Deficient Deferred Tax Expense – Protected		Other	Note [2]		
Collection of Deficient Deferred Tax Expense – Unprotected PPE		Other	Note [2]		
Collection of Deficient Deferred Tax Expense – Unprotected Non-PPE		Other	Note [2]		
Amortization of Excess Deferred Tax Expense – Protected		Other	Note [2]		
Amortization of Excess Deferred Tax Expense – Unprotected PPE		Other	Note [2]		
Amortization of Excess Deferred Tax Expense – Unprotected Non-PPE		Other	Note [2]		
Net Deficient/ Excess Tax Expense	$ -			$ -	

Notes:

[1] Excess/Deficient Deferred Tax Expense shall equal the return or collection of excess or deficient deferred taxes as shown in Attachments U, V, and W of this file. The return or collection of excess or deficient deferred taxes that result from any future federal or state income tax rate change, will be presented in the format of Attachment X, which DEC will populate and provide subsequent to such tax change.

[2] The allocation factor to be applied to the 2017 TCJA balances is 0.09658 and is based on the historic net plant allocation factor as filed in the 2018 annual update. DEC proposes to use the historical net plant allocation factor for the year of the tax rate change for Excess/Deficient Deferred Income Tax balances created due to future tax rate changes. The allocation factor applied to the future tax rate changes will be identified in a new sentence added to this Note.

Duke Energy Carolinas, LLC

Protected Federal Excess Deferred Tax Worksheet[1]

	Dr./(Cr.) **190**	*Dr./(Cr.)* **282**	*Dr./(Cr.)* **283**	*Dr./(Cr.)* **Total**
Pre-Remeasurement ADIT	8,942,835	(3,760,964,608)	0	(3,752,021,773)
Post Remeasurement ADIT	428,377,724	(2,368,804,236)	0	(1,940,426,512)
ADIT Remeasurement	419,434,889	1,392,160,372	0	1,811,595,261
Offset (Dr.)/Cr. [7]	*Dr./(Cr.)*	*Dr./(Cr.)*	*Dr./(Cr.)*	*Dr./(Cr.)*
TCJA Remeasurement	**190**	**282**	**283**	**Total**
182.3 (Excluding Gross Up)	0	0	0	0
254 Gross Up [2]	423,012,023	0	0	423,012,023
Balance Sheet Only Total [3]	423,012,023	0	0	423,012,023
Deferred Credit	0	0	0	0
Deferred Debit	0	0	0	0
182.3	0	0	0	0
Deferred Credit	0	1,392,160,372	0	1,392,160,372
Deferred Debit	(3,577,134)	0	0	(3,577,134)
254	(3,577,134)	1,392,160,372	0	1,388,583,238
EDIT Liability Total	**(3,577,134)**	**1,392,160,372**	**0**	**1,388,583,238**
Debit	*0*	*0*	*0*	*0*
Credit	*0*	*0*	*0*	*0*
411.2	0	0	0	0
Def Inc Tax Exp Total [3]	0	0	0	0
Total Change in ADIT	**419,434,889**	**1,392,160,372**	**0**	**1,811,595,261**

	Projected Rate						Historic					
			(A) x (System-level balance)		(C-(D+E))				(A) x (System-level balance)		(H-(I+J))	
(A) Amortization Rate [4]	(B) Year (Rate Year)[5]	(C) Beginning Year Balance	(D) Current Year Excess ADIT Liabilities Amortization - 411.1 [6]	(E) Current Year Deficient ADIT Assets Amortization - 410.1 [6]	(F) Remaining Balance	Gross-up Remaining Unamortized Bal. [8]	(G) Calendar Year	(H) Beginning Year Balance	(I) Current Year Excess ADIT Liabilities Amortization - 411.1 [6]	(J) Current Year Deficient ADIT Assets Amortization - 410.1 [6]	(K) Remaining Balance	Gross-up Remaining Unamortized Bal. [8]
2.43%	Year 1 (June 20 - May 21)	1,388,583,238	33,742,573	0	1,354,840,665	412,732,830	2020	1,388,583,238	19,683,167	0	1,368,900,070	417,015,827
3.55%	Year 2 (June 21 - May 22)	1,354,840,665	49,294,705	0	1,305,545,960	397,715,903	2021	1,368,900,070	42,814,650	0	1,326,085,420	403,972,956
2.86%	Year 3 (June 22 – May 23)	1,305,545,960	39,713,481	0	1,265,832,479	385,617,759	2022	1,326,085,420	43,705,657	0	1,282,379,763	390,658,653

(1) The return of the protected portion of excess Federal ADIT generated by the 2017 Tax Cuts and Jobs Act will begin effective June 1, 2020 and continue through the term of the contract using the agreed upon methodology until the balance in the Remaining Balance column is $0.

(2) Represents Gross Up on Excess/ Deficient Deferred Income Tax balance to be returned to/ collected from customers.

(3) The Balance Sheet Only and Def Inc Tax Exp sections do not affect OATT rate base or the OATT revenue requirement. These are provided for Order 864 compliance purposes only.

(4) Represents the estimated ARAM rate per DEC's PowerTax system. Revised ARAM rates are calculated each year. DEC will use the best available ARAM rate when setting the annual billing rate each year. The "best available" ARAM means the ARAM rate based on the last filed final Federal Corporate income tax return, after all permitted Federal extensions for DEC, as of the date of the posting of the Annual Update, prior to the start of the Annual Update review process. An updated schedule reflecting the revised ARAM rate will be provided each year as part of each annual update.

(5) The total number of years necessary for the return of the protected portion of excess Federal ADIT to customers will be determined by the ARAM rate, which will change over time.

(6) Note, amortization for the first year of the EDIT return will reflect the initial mid-year start date of June 1, 2020 with 7 months of amortization recognized in year 1. Deficient Deferred Income Tax Assets for all years will be amortized to account 410.1. Excess Deferred Income Tax Liabilities for all years will be amortized to account 411.1. The ADIT source account for amortization is determined based on the proportion of the ADIT balance that was transferred to the "EDIT Liability Total" row. All subsequent calendar years post Year 1 will also reflect the 7-month/5-month in the calculation of Columns (I) and (J) for the "Calendar Year Remaining Balances" in Column (K).

(7) Amounts reported on this schedule reflect activity to the originating ADIT account. Reverse the sign to determine activity to the offsetting account (e.g., a Debit to account 282, would be offset with a Credit to 254).

(8) Unamortized Gross-up balance is subject to future changes in corporate income tax rate, which may change the unamortized gross-up amounts. DEC will calculate the Gross-up on the Remaining Unamortized Balance using the current deferred income tax rate as part of the annual update file each May.

Duke Energy Carolinas, LLC

Unprotected PP&E Federal Excess Deferred Tax Worksheet[1]

	Dr./(Cr.)	*Dr./(Cr.)*	*Dr./(Cr.)*	*Dr./(Cr.)*
	190	**282**	**283**	**Total**
Pre-Remeasurement ADIT	0	(2,399,696,138)	0	(2,399,696,138)
Post Remeasurement ADIT	270,599,547	(1,511,423,523)	0	(1,240,823,976)
ADIT Remeasurement	270,599,547	888,272,615	0	1,158,872,162
Offset (Dr.)/Cr. [5]	*Dr./(Cr.)*	*Dr./(Cr.)*	*Dr./(Cr.)*	*Dr./(Cr.)*
TCJA Remeasurement	**190**	**282**	**283**	**Total**
182.3 (Excluding Gross Up)	0	0	0	0
254 Gross Up [2]	270,599,547	0	0	270,599,547
Balance Sheet Only Total [3]	270,599,547	0	0	270,599,547
Deferred Credit	0	0	0	0
Deferred Debit	0	0	0	0
182.3	0	0	0	0
Deferred Credit	0	1,097,789,560	0	1,097,789,560
Deferred Debit	0	(209,516,945)	0	(209,516,945)
254	0	888,272,615	0	888,272,615
EDIT Liability Total	**0**	**888,272,615**	**0**	**888,272,615**
Debit	*0*	*0*	*0*	*0*
Credit	*0*	*0*	*0*	*0*
411.2	0	0	0	0
Def Inc Tax Exp Total [3]	0	0	0	0
Total Change in ADIT	**270,599,547**	**888,272,615**	-	**1,158,872,162**

Projected

(A)	(B)	(C)	(D)	(E)	(F)	Gross-up
			(A) x (System-level balance)		(C-(D+E))	
Amortization Rate (20 Years)	**Year (Rate Year)**	**Beginning year balance**	**Current Year Excess ADIT Liabilities Amortization - 411.1** [4]	**Current Year Deficient ADIT Assets Amortization - 410.1** [4]	**Remaining Balance**	**Remaining Unamortized Bal.** [6]
5.00%	Year 1 (June 20 - May 21)	888,272,615	44,413,631	0	843,858,984	257,069,570
5.00%	Year 2 (June 21 - May 22)	843,858,984	44,413,631	0	799,445,354	
5.00%	Year 3 (June 22 - May 23)	799,445,354	44,413,631	0	755,031,723	
5.00%	Year 4 (June 23 - May 24)	755,031,723	44,413,631	0	710,618,092	
5.00%	Year 5 (June 24 - May 25)	710,618,092	44,413,631	0	666,204,461	
5.00%	Year 6 (June 25 - May 26)	666,204,461	44,413,631	0	621,790,831	
5.00%	Year 7 (June 26 - May 27)	621,790,831	44,413,631	0	577,377,200	
5.00%	Year 8 (June 27 - May 28)	577,377,200	44,413,631	0	532,963,569	
5.00%	Year 9 (June 28 - May 29)	532,963,569	44,413,631	0	488,549,938	
5.00%	Year 10 (June 29 - May 30)	488,549,938	44,413,631	0	444,136,308	
5.00%	Year 11 (June 30 - May 31)	444,136,308	44,413,631	0	399,722,677	
5.00%	Year 12 (June 31 - May 32)	399,722,677	44,413,631	0	355,309,046	
5.00%	Year 13 (June 32 - May 33)	355,309,046	44,413,631	0	310,895,415	
5.00%	Year 14 (June 33 - May 34)	310,895,415	44,413,631	0	266,481,785	
5.00%	Year 15 (June 34 - May 35)	266,481,785	44,413,631	0	222,068,154	
5.00%	Year 16 (June 35 - May 36)	222,068,154	44,413,631	0	177,654,523	
5.00%	Year 17 (June 36 - May 37)	177,654,523	44,413,631	0	133,240,892	
5.00%	Year 18 (June 37 - May 38)	133,240,892	44,413,631	0	88,827,262	
5.00%	Year 19 (June 38 - May 39)	88,827,262	44,413,631	0	44,413,631	
5.00%	Year 20 (June 39 - May 40)	44,413,631	44,413,631	0	0	

Historic

(G)	(H)	(I)	(J)	(K)	Gross-up
		(A) x (System-level balance)		(H-(I+J))	
Calendar Year	**Beginning Year Balance**	**Current Year Excess ADIT Liabilities Amortization - 411.1** [4]	**Current Year Deficient ADIT Assets Amortization - 410.1** [4]	**Remaining Balance**	**Remaining Unamortized Bal.** [6]
2020	888,272,615	25,907,951	0	862,364,664	262,707,060
2021	862,364,664	44,413,631	0	817,951,033	
2022	817,951,033	44,413,631	0	773,537,402	
2023	773,537,402	44,413,631	0	729,123,771	
2024	729,123,771	44,413,631	0	684,710,141	
2025	684,710,141	44,413,631	0	640,296,510	
2026	640,296,510	44,413,631	0	595,882,879	
2027	595,882,879	44,413,631	0	551,469,248	
2028	551,469,248	44,413,631	0	507,055,618	
2029	507,055,618	44,413,631	0	462,641,987	
2030	462,641,987	44,413,631	0	418,228,356	
2031	418,228,356	44,413,631	0	373,814,725	
2032	373,814,725	44,413,631	0	329,401,095	
2033	329,401,095	44,413,631	0	284,987,464	
2034	284,987,464	44,413,631	0	240,573,833	
2035	240,573,833	44,413,631	0	196,160,202	
2036	196,160,202	44,413,631	0	151,746,572	
2037	151,746,572	44,413,631	0	107,332,941	
2038	107,332,941	44,413,631	0	62,919,310	
2039	62,919,310	44,413,631	0	18,505,679	
2040	18,505,679	18,505,679	0	0	

(1) The unprotected PPE portion of excess Federal ADIT generated by the 2017 Tax Cuts and Jobs Act will be returned to customers over a 20 year period, effective June 1, 2020.

(2) Represents Gross Up on Excess/ Deficient Deferred Income Tax balance to be returned to/ collected from customers.

(3) The Balance Sheet Only and Def Inc Tax Exp sections do not affect OATT rate base or the OATT revenue requirement. These are provided for Order 864 compliance purposes only.

(4) Note, amortization for the first year of the EDIT return will reflect the initial mid-year start date of June 1, 2020 with 7 months of amortization recognized in year 1. Deficient Deferred Income Tax Assets for all years will be amortized to account 410.1. Excess Deferred Income Tax Liabilities for all years will be amortized to account 411.1. The ADIT source account for amortization is determined based on the proportion of the ADIT balance that was transferred to the "EDIT Liability Total" row.

(5) Amounts reported on this schedule reflect activity to the originating ADIT account. Reverse the sign to determine activity to the offsetting account (e.g., a Debit to account 282, would be offset with a Credit to 254).

(6) Unamortized Gross-up balance is subject to future changes in corporate income tax rate, which may change the unamortized gross-up amounts. DEC will calculate the Gross-up on the Remaining Unamortized Balance using the current deferred income tax rate as part of the annual update file each May.

Duke Energy Carolinas, LLC

Unprotected Non-PP&E Federal Excess Deferred Tax Worksheet[1]

	Dr./(Cr.)	*Dr./(Cr.)*	*Dr./(Cr.)*	*Dr./(Cr.)*	*Dr./(Cr.)*
	190	**282**	**283**	**236[2]**	**Total**
Pre-Remeasurement ADIT	2,818,158,435	(514,811,737)	(3,101,293,469)	0	(797,946,771)
Post Remeasurement ADIT	1,889,338,467	(306,813,611)	(1,853,039,410)	0	(270,514,554)
ADIT Remeasurement	(928,819,968)	207,998,125	1,248,254,059	0	527,432,217
Offset (Dr.)/Cr. [7]	*Dr./(Cr.)*	*Dr./(Cr.)*	*Dr./(Cr.)*	*Dr./(Cr.)*	*Dr./(Cr.)*
TCJA Remeasurement	**190**	**282**	**283**	**236[2]**	**Total**
182.3 (Excluding Gross Up)	0	208,714,242	222,028,701	0	430,742,943
253 (Excluding Gross Up)[3]	(18,024,732)	0	0	0	(18,024,732)
254 (Excluding Gross Up)	(120,265,493)	(4,731,551)	251,427	0	(124,745,617)
254 Gross Up [4]	58,163,037	0	0	0	58,163,037
Balance Sheet Only Total [5]	**(80,127,188)**	**203,982,691**	**222,280,128**	**0**	**346,135,631**
Deferred Credit	*0*	*0*	*0*		*0*
Deferred Debit	*0*	*0*	*0*		*0*
182.3	0	0	0		0
Deferred Credit	*15,556,565*	*0*	*1,030,652,960*		*1,046,209,525*
Deferred Debit	*(850,640,400)*	*0*	*(4,642,592)*		*(855,282,992)*
254	(835,083,836)	0	1,026,010,368		190,926,532
EDIT Liability Total	**(835,083,836)**	**0**	**1,026,010,368**		**190,926,532**
Debit	*17,639*	*4,429,710*	*0*	*0*	*4,447,349*
Credit	*(13,626,584)*	*(414,276)*	*(36,437)*	*(5,066,693)*	*(19,143,990)*
411.2	(13,608,945)	4,015,434	(36,437)	(5,066,693)	(14,696,641)
Def Inc Tax Exp Total[5]	**(13,608,945)**	**4,015,434**	**(36,437)**	**(5,066,693)**	**(14,696,641)**
Total Change in ADIT	**(928,819,968)**	**207,998,125**	**1,248,254,059**	**(5,066,693)**	**522,365,523**

Projected

			(A) x (System-level balance)		(C-(D+E))		Historic				(H-(I+J))	
(A)	**(B)**	**(C)**	**(D)**	**(E)**	**(F)**	**Gross-up**	**(G)**	**(H)**	**(I)**	**(J)**	**(K)**	**Gross-up**
Amortization		**Beginning Year**	**Current Year Excess ADIT Liabilities**	**Current Year Deficient ADIT Assets**	**Remaining**	**Remaining**		**Beginning Year**	**Current Year Excess ADIT Liabilities**	**Current Year Deficient ADIT Assets**	**Remaining**	**Remaining**
Rate	**Year (Rate Year)**	**Balance**	**Amortization - 411.1 [6]**	**Amortization - 410.1 [6]**	**Balance**	**Unamortized Bal. [8]**	**Calendar Year**	**Balance**	**Amortization - 411.1 [6]**	**Amortization - 410.1 [6]**	**Balance**	**Unamortized Bal. [8]**
20.00%	Year 1 (June 20 - May 21)	190,926,532	38,185,306	0	152,741,226	46,530,430	2020	190,926,532	22,274,762	0	168,651,770	51,377,350
20.00%	Year 2 (June 21 - May 22)	152,741,226	38,185,306	0	114,555,919		2021	168,651,770	38,185,306	0	130,466,464	
20.00%	Year 3 (June 22 - May 23)	114,555,919	38,185,306	0	76,370,613		2022	130,466,464	38,185,306	0	92,281,157	
20.00%	Year 4 (June 23 - May 24)	76,370,613	38,185,306	0	38,185,306		2023	92,281,157	38,185,306	0	54,095,851	
20.00%	Year 5 (June 24 - May 25)	38,185,306	38,185,306	0	0		2024	54,095,851	38,185,306	0	15,910,544	
							2025	15,910,544	15,910,544	0	0	

(1) The unprotected non-PPE portion of excess Federal ADIT generated by the 2017 Tax Cuts and Jobs Act will be returned to customers over a 5 year period, effective June 1, 2020.

(2) The remeasurement to account 236 represents the revaluation of the federal benefit of state from 35% to 21% on an accrued state settlement.

(3) FERC account 253 held a gross-up of excess North Carolina deferred income taxes and at 12/31/17 the balance was remeasured from 35% to 21%.

(4) Represents Gross Up on Excess/ Deficient Deferred Income Tax balance to be returned to/ collected from customers.

(5) The Balance Sheet Only and Def Inc Tax Exp sections do not affect OATT rate base or the OATT revenue requirement. These are provided for Order 864 compliance purposes only.

(6) Note, amortization for the first year of the EDIT return will reflect the initial mid-year start date of June 1, 2020 with 7 months of amortization recognized in year 1. Deficient Deferred Income Tax Assets for all years will be amortized to account 410.1. Excess Deferred Income Tax Liabilities for all years will be amortized to account 411.1. The ADIT source account for amortization is determined based on the proportion of the ADIT balance that was transferred to the "EDIT Liability Total" row.

(7) Amounts reported on this schedule reflect activity to the originating ADIT account. Reverse the sign to determine activity to the offsetting account (e.g., a Debit to account 282, would be offset with a Credit to 254).

(8) Unamortized Gross-up balance is subject to future changes in corporate income tax rate, which may change the unamortized gross-up amounts. DEC will calculate the Gross-up on the Remaining Unamortized Balance using the current deferred income tax rate as part of the annual update file each May.

Duke Energy Carolinas, LLC

OATT Template - Generic - [Return/ Collection of Future Excess Deficient] Deferred Taxes - [Protected/Unprotected PPE/ Unprotected Non-PPE] Portion

	Dr./(Cr.)	*Dr./(Cr.)*	*Dr./(Cr.)*	*Dr./(Cr.)*	*Dr./(Cr.)*
	190	**282**	**283**	**XXX[1]**	**Total**
Pre-Remeasurement ADIT Balance					-
Post Remeasurement ADIT Balance					-
ADIT Remeasurement	-	-	-	-	-

Offset (Dr.)/Cr. **Income Tax Remeasurement**	*Dr./(Cr.)* **190**	*Dr./(Cr.)* **282**	*Dr./(Cr.)* **283**	*Dr./(Cr.)* **XXX[1]**	*Dr./(Cr.)* **Total**
182.3	-				-
254 (Excluding Gross Up)					-
254 Gross Up					-
Balance Sheet Only Total	**-**	**-**	**-**	**-**	**-**
Deferred Debit					-
Deferred Credit					-
182.3	-	-	-		-
Deferred Debit					-
Deferred Credit					-
254	-	-	-		-
Excess/ Deficient DIT Total[2]	**-**	**-**	**-**	**-**	
Debit					
Credit					
Account XXX [1]					
Def Inc Tax Exp Total	**-**	**-**	**-**	**-**	**-**
Total Change in ADIT	**-**	**-**	**-**	**-**	**-**

	Projected						Historic					
			(A) x (System-level balance)		**(C-(D+E))**				**(A) x (System-level balance)**		**(H-(I+J))**	
(A)	**(B)**	**(C)**	**(D)**	**(E)**	**(F)**	**Gross-up**	**(G)**	**(H)**	**(I)**	**(J)**	**(K)**	**Gross-up**
Amortization Rate[3]	**Year (Rate Year)**	**Beginning year balance**	**Current year Excess ADIT Liabilities Amortization - 411.1[4]**	**Current year Deficient ADIT Assets Amortization - 410.1[4]**	**Remaining Balance**	**Remaining Unamortized Bal.**	**Calendar Year**	**Beginning Year Balance**	**Current Year Excess ADIT Liabilities Amortization - 411.1[4]**	**Current Year Deficient ADIT Assets Amortization - 410.1[4]**	**Remaining Balance**	**Remaining Unamortized Bal.**
	Year 1 (June 20XX - May 20XX+1)						20XX					
	Year 2 (June 20XX+1 - May 20XX+2)						20XX+1					

[1] Account will be populated with the account remeasured as a result of the Federal or State tax rate change and the amount will be the excess or deficient ADIT contained therein.

[2] The *[Protected/Unprotected PPE/Unprotected Non-PPE]* portion of *[excess/deficient]* ADIT generated by *[Insert Name of Federal or State Tax Law]* will be returned to or collected from customers over a [X] year period, effective [Insert Date]. The amortization period for unprotected excess or deficient ADIT will be no longer than a reasonable estimate of the average remaining lives of the underlying assets. If a future tax rate change requires the collection of deficient ADIT from customers, the amortization period will reasonably balance the [Company's] need to fund the tax liability against rate shock to customers. If the future tax rate change requires return of excess ADIT to customers, the amortization period will reasonably balance the benefits of returning excess ADIT to customers with the [Company's] cash flow and credit risks.

[3] The total number of years necessary for the *[return of the Protected portion of excess ADIT]* or *[recovery of the Protected portion of deficient ADIT]* to customers will be determined by the ARAM rate, which will change over time, or a methodology consistent with the tax normalization rules in place at the time of the tax rate change.

[4] Deficient Deferred Income Tax Assets for all years will be amortized to account 410.1. Excess Deferred Income Tax Liabilities for all years will be amortized to account 411.1.

Schedule 10-B

Exhibit C

Duke Energy Carolinas Formula Rate Principles

The following notes apply to calculations in the Formula Rate and are an integral part of the Formula Rate.

1.0 Transmission-related Revenue Credits.
(i) The transmission-related revenue credits in the Formula Rate shall be determined in the following manner:

(1) All revenues associated with facilities allocated to the transmission function, including both direct and indirect allocations (*e.g.*, general and intangible plant and administrative and general expense) shall be treated as revenue credits in the Formula Rate. Such revenue credits shall include, but shall not be limited to, transmission facilities lease/rental payments, direct assignment facilities charges, and general plant-related income.

(2) Transmission revenues from Short-Term Firm and Non-Firm Transmission Services under the OATT and transmission service similar to Short-Term Firm or Non-Firm Transmission Services under the OATT shall be treated as revenue credits in the Formula Rate.

(3) Transmission services revenues and Schedule 1 – Scheduling, System Control and Dispatch Service ancillary service revenues from Federal Energy Regulatory Commission (FERC) Account 456.1 shall be treated as revenue credits in the Formula Rate, but all other ancillary services revenues from FERC Account 456.1 shall not be revenue credits in the Formula Rate.

(4) Revenues associated with indirect allocations of costs to the transmission function (*e.g.*, general and intangible plant) shall be allocated to the transmission function in the Formula Rate based on the same underlying indirect allocations of costs and treated as a revenue credit.

2.0 Cash Working Capital. The Formula Rate shall include cash working capital based on a formulary approach as follows: 1/8 multiplied by the total of operation and maintenance expense.

3.0 Prepayments for Network Upgrades by Generators. The Formula Rate shall include as an offset to rate base in the Formula Rate the amount of refundable prepayments made by generators for network upgrades that Duke Energy Carolinas has not refunded to the OATT transmission customer as credits to its transmission charges; this will ensure Duke Energy Carolinas does not earn a return on those funds.

Correspondingly, the amount of interest paid to OATT transmission customers as their balances are credited against their transmission service shall be included as an expense in the Formula Rate. Duke Energy Carolinas shall not capitalize and add any AFUDC to the completed cost of such network upgrades, but instead will include only the balance of any unrefunded interest accrued at the FERC refund interest rate as an addition to rate base.

4.0 Credits for Customer-owned Facilities under FERC Order No. 890. The Formula Rate shall include a placeholder for any future credits for customer-owned facilities to prevent any under-recovery of revenues by Duke Energy Carolinas due to any credits provided to OATT transmission customers for their own facilities.

5.0 Transmission Provider's Compliance with Order No. 2003. In accordance with FERC Order No. 2003, the Formula Rate shall exclude any transmission plant that meets the definition of "Interconnection Facilities" and was placed in service for Duke Energy Carolinas' own generation facilities after March 15, 2000. The Formula Rate shall also exclude generator step-up transformers and transmission lines less than 44kv.

6.0 Accumulated Deferred Income Taxes (ADIT). Accumulated deferred income taxes (ADIT) reflected in the Formula Rate shall be only such amounts as are properly allocated or assigned to the transmission function. In each Annual Update (as defined in the Formula Rate Implementation Protocols), Duke Energy Carolinas shall provide a spreadsheet that shows the functionalization of the FERC Form No. 1 reported amounts for ADIT and supports the amount of ADIT to be reflected in the Formula Rate. The functionalization shall be based on the most recent federal income tax return information available at the time the calculation of actual annual revenue requirements is performed. Because the unamortized balance of GridSouth costs is excluded from rate base, there will be no ADIT offset in the formula rate calculation related to GridSouth unamortized balance.

7.0 Intangible Plant. Intangible plant reflected in the Formula Rate shall only be such amounts as are properly allocated or assigned to the transmission function. In each Annual Update (as defined in the Formula Rate Implementation Protocols), Duke Energy Carolinas shall provide a spreadsheet that shows the functionalization of the FERC Form No. 1 reported amounts for Intangible plant and the associated accumulated amortization and supports the amounts to be reflected in the Formula Rate.

8.0 FERC Account 561. Consistent with FERC Order No. 668, the Formula Rate reflects the appropriate treatment of Account 561 subaccounts such that the Formula Rate includes only those items associated with Transmission Service and Schedule 1 – Scheduling, System Control and Dispatch Service.

9.0 Billing Demands. For firm point to point and network transmission service, billing

demands will be at the meter level (net of losses).

10.0 <u>Directly Assigned or Assignable Costs</u>. The Formula Rate shall exclude all costs that are properly directly assigned or assignable to one or more particular customers, including costs directly assigned or assignable to Duke.

11.0 <u>Radial Facilities</u>.

(i) The cost of New Radial Facilities owned by Duke Energy Carolinas shall be excluded from the Transmission Service Formula Rate as reflected in the provisions thereof. Customer shall construct and own New Radial Facilities necessary to serve the load of such Customer; and the cost of New Radial Facilities owned by the Customer shall not be eligible for Order 890 Credits. At the time that a New Radial Facility owned by a Customer experiences a change in characteristics such that it meets the Commission's standards to be treated as an integrated facility, including the standards and policies set forth in Order No. 890-B,[1] the Customer shall then be entitled at its election to Order 890 Credits for the undepreciated portion of the cost of such facility. At the time that a New Radial Facility owned by Duke Energy Carolinas experiences a change in characteristics such that it meets the Commission's standards to be treated as an integrated facility, the undepreciated portion of the cost of such facility may then be included in the Formula Rate.

(ii) The cost of Existing Radial Facilities owned by Duke Energy Carolinas, and upgrades thereto, shall be included in the Transmission Service Formula Rate. Customers currently receiving Order 890 Credits for Existing Radial Facilities or whose Existing Radial Facilities are rolled into Duke Energy Carolinas' rates will continue to receive such credits or rolled-in rate treatment until the facilities are fully depreciated. No Customer shall have any obligation to refund any Order 890 Credits previously paid to it by Duke Energy Carolinas with respect to Existing Radial Facilities. Further, nothing in this Tariff is intended to constitute a waiver of any Customer's right to seek appropriate treatment under Order 890 for Existing Radial Facilities or to recover Order 890 Credits for Existing Radial Facilities.

(iii) The following terms shall have the following definitions:

(1) "New Radial Facilities" shall mean lines and facilities that (1) are radially constructed, (2) are placed in service after the effective date of the Transmission

[1] *Preventing Undue Discrimination and Preference in Transmission Service*, Order No. 890, FERC Stats. & Regs. ¶ 31,241 (2007), *order on reh'g*, Order No. 890-A, FERC Stats. & Regs. ¶ 31,261, *order on reh'g*, Order No. 890-B, 123 FERC ¶ 61,299 (2008), *order on reh'g and clarification*, Order No. 890-C, 126 FERC ¶ 61,228; *order on clarification*, Order No. 890-D, 129 FERC ¶ 61,126 (2009).

Service Formula Rate, and (3) do not meet the Commission's standard for treatment as lines and facilities that are integrated with Duke Energy Carolinas' transmission system. New Radial Facilities built for or by a Customer will be presumed to provide benefits to Duke Energy Carolinas' integrated network if such facilities would be treated as part of Duke Energy Carolinas' integrated network if built exclusively to provide service to Duke Energy Carolinas' retail customers. For the avoidance of doubt, switches and related equipment rated at 44 kV or above which meet the Commission's standard for treatment as integrated facilities, or that would be treated as part of Duke Energy Carolinas' integrated network if built exclusively to provide service to Duke Energy Carolinas' retail customers, will not constitute "New Radial Facilities."

(2) "Existing Radial Facilities" shall mean lines and facilities that (1) are radially constructed, (2) are placed in service prior to the effective date of the Transmission Service Formula Rate, and (3) do not meet the Commission's standard for treatment as lines and facilities that are integrated with Duke Energy Carolinas' transmission system. Existing Radial Facilities built for or by a Customer will be presumed to provide benefits to Duke Energy Carolinas' integrated network if such facilities would be treated as part of Duke Energy Carolinas' integrated network if built exclusively to provide service to Duke Energy Carolinas' retail customers.

(3) "Order 890 Credits" shall mean credits with respect to a transmission facility owned by a transmission customer which is integrated with the transmission provider's system to which such customer is entitled under the Commission's Order 890.

12.0 <u>Load Ratio Share</u>. The calculation of load ratio share for network transmission service shall be based upon a numerator for each customer that uses coincident peak network loads measured at the meter level (net of losses) and a denominator (the Duke Energy Carolinas system peak transmission demand) based on the 12 month rolling average of system peak demands at the generation level (including losses).

Where long-term firm transmission obligations undertaken by Duke Energy Carolinas, either for off-system sales or transmission services, are based upon reservations of capacity, the denominator (system peak transmission demand) for the load ratio share calculation for network transmission service shall include the contract demands for such obligations in lieu of the actual coincidental peak demands at the time of the Duke Energy Carolinas monthly system transmission demand peak. The denominator shall exclude Short Term Transmission Service and Non-Firm Transmission Service demands at the time of the Duke Energy Carolinas monthly system transmission demand peak.

13.0 GridSouth. The Transmission Service Formula Rate shall include an annual expense allowance to amortize Duke Energy Carolinas' unrecovered RTO development costs of $44,689,400 which represents the sum of (i) costs that Duke Energy Carolinas incurred in attempting to form the GridSouth regional transmission organization and (ii) an allowance for funds (i.e., carrying costs) on those expenditures through December 31, 2003. The annual expense allowance included in the Transmission Service Formula Rate shall amortize Duke Energy Carolinas' unrecovered GridSouth development costs over a seven-year period beginning June 1, 2011 and ending May 31, 2018; provided, that the amortization for the period January 1, 2016 through May 31, 2018 shall not be included in the Transmission Service Formula Rate. During the seven-year amortization period, Duke Energy Carolinas shall not include the unamortized balance in the investment base used to calculate charges under the Transmission Service Formula Rate, nor shall Duke Energy Carolinas calculate and accrue an allowance for funds on unamortized balances. Duke Energy Carolinas shall take the steps that are necessary to ensure that on or after January 1, 2016 charges to customers calculated in accordance with the Transmission Service Formula Rate shall not include any expense allowance for recovery of Duke Energy Carolinas' unrecovered GridSouth development costs. The Formula contains in Note N language which states that "[b]eginning January 1, 2016 and each year thereafter, the value of the GridSouth amortization at Attachment K, line 4 will be zero."

14.0 Partial Moratorium. For the first three (3) full-year billing periods during which the Transmission Service Formula Rate is used to calculate charges to Customers, Duke Energy Carolinas shall not be permitted to file with FERC a request for incentive-based rate treatments for transmission infrastructure investment as described in 18 C.F.R. 35.35 (d).

15.0 Tax Protest. The revenue-related tax factor shall have a Stated Value of 1.0. If a taxing authority determines that Duke Energy Carolinas is obligated to pay a tax which would result in a revenue-related tax factor of less than 1.0, then Duke Energy Carolinas shall notify the Customers in writing within thirty (30) days of receiving notification of such determination. Upon the timely written request of a Customer or group of Customers, and at such Customers' sole expense, Duke Energy Carolinas may appeal, protest, seek abatement of, or otherwise oppose such determination. Upon the Customers' written request and at their sole expense, Duke Energy Carolinas further may file a claim for refund with respect to any such taxes paid, whether or not it has received such a determination. Duke Energy Carolinas reserves the right to make all decisions with regard to the prosecution of such appeal, protest, abatement or other contest, including the selection of counsel and compromise or settlement of the claim, but Duke Energy Carolinas shall keep the Customers informed, shall consider in good faith suggestions from the Customers about the conduct of the contest, and shall reasonably permit the Customers or Customer representatives to attend contest proceedings. The Customers shall pay to Duke Energy Carolinas on a periodic basis, as invoiced by Duke

Energy Carolinas, Duke Energy Carolinas' documented reasonable costs of prosecuting such appeal, protest, abatement or other contest.

16.0 Effective Date of Depreciation Rate Changes. If Duke Energy Carolinas submits a filing under Section 205 of the FPA to change the Stated Value(s) for any depreciation rates, the Customers agree to and will not contest a request by Duke Energy Carolinas that the effective date of such change shall be the same date that the corresponding changes are implemented for Duke Energy Carolinas' accounting purposes, as long as such effective date is not any earlier than January 1 of the year in which Duke Energy Carolinas first files the associated application to change the depreciation rates pursuant to Section 205 of the FPA. The Customers will retain their rights to contest the amount or any other aspect of the depreciation rate changes other than the effective date.

17.0 Rate of Return on Equity and Common Equity Ratio Moratorium. The rate of return on common equity set forth in Schedule 10-B, Exhibit B, page 4, line 23 and page 34, line 23, and common equity ratio cap set forth in Schedule 10-B, Exhibit B, page 5, Note V and page 35, note V shall not be subject to change during the period January 1, 2016 through December 31, 2019 ("Rate Moratorium Period"), and neither DEC nor any Transmission Customer may submit (or lend support to) a filing under Section 205 or 206 of the FPA seeking a change in the rate of return on equity or common equity ratio caps set forth in Schedule 10-B that would become effective prior to January 1, 2020. The rates for OATT transmission service provided by DEC for January 1, 2019 through December 31, 2019 (which under the existing test year methodology are subject to true-up on or about May 15, 2020) shall be subject to the foregoing rate moratorium. The rate of return on common equity and common equity ratio cap shall remain in effect after the Rate Moratorium Period ends unless changed pursuant to FPA Section 205 or 206.

18.0 GridSouth Expense Amortization Moratorium. The termination of the amortization of DEC's GridSouth expenses effective December 31, 2015 set forth in Schedule 10-B, Exhibit B, page 5, Note N, and page 35, Note N and the Duke Energy Carolinas Formula Rate Principles, Paragraph 13.0, shall not be subject to change at any time, and neither DEC nor any Transmission Customer may submit (or lend support to) a filing under Section 205 or 206 of the FPA seeking a change in such provision.

19.0 Test Year Methodology Moratorium. DEC's methodology of using of a projected test year that is subject to true-up based on actual costs in Schedule 10-B (i.e., rates that are trued up on or about May 15 each year based on DEC's actual costs for the prior year) shall not be subject to change during the period January 1, 2016 through December 31, 2019 ("Rate Moratorium Period"), and neither DEC nor any Transmission Customer may submit (or lend support to) a filing under Section 205 or 206 of the FPA seeking a change in DEC's use of this test year methodology set forth in Schedule 10-B that would become effective prior to January 1, 2020. This limitation on parties' Section

205 and 206 rights applies only to the test year methodology used in Schedule 10-B; it does not limit parties' Section 205 or 206 rights to seek other changes to Schedule 10-B, such as changes to individual formula rate components. The rates for OATT transmission service provided by DEC for January 1, 2019 through December 31, 2019 (which under the existing test year methodology are subject to true-up on or about May 15, 2020) shall be subject to the foregoing rate moratorium. This test year methodology shall remain in effect after the Rate Moratorium Period ends unless changed pursuant to FPA Section 205 or 206.

20.0 Real Power Loss Factor Moratorium.

The stated real power loss factors that are in effect for services provided from June 1, 2017 through May 31, 2019 pursuant to OATT Sections 15.7 and 28.5 and OATT Schedule 9 shall not be subject to change through a filing with FERC unless the Settling Parties all shall have consented to such filing in writing, as provided in settlement of FERC Docket No. ER17-1357.

The methodology for calculating the real power loss factors included in OATT Attachment W shall not be subject to change through a filing submitted to FERC prior to June 1, 2021 unless the Settling Parties all shall have consented to such filing in writing, as provided in settlement of FERC Docket No. ER17-1357. The consent of all such entities shall not be required for a filing proposing a change in the methodology for calculating the real power loss factors that is submitted to FERC on or after June 1, 2021.

SCHEDULE 10-C

NETWORK INTEGRATION TRANSMISSION SERVICE

[DEP Zone]

In the DEP Zone, the Transmission Customers shall compensate the Transmission Provider each month for Network Load for the applicable month as provided in Attachment H.

SCHEDULE 11

DISTRIBUTION SUBSTATION SERVICE

[DEF Zone]

The Transmission Customer shall compensate the Transmission Provider each month for Reserved Capacity or Network Load, as applicable, delivered to the Transmission Provider's Distribution Substations in the DEF Zone at the applicable charges set forth below:

11.1 Monthly Period: $722/MW month.

11.2 Weekly Period: $166.61/MW week.

11.3 Daily Period: The charge for Daily Period delivery on on-peak days shall be $33.32/MW day and the charge for Daily Period delivery on off-peak days shall be $23.74/MW day. The total demand charge in any Weekly Period, pursuant to a reservation for Daily Period delivery, shall not exceed the Weekly Period rate times the highest amount in kilowatts of Reserved Capacity in any Daily Period during such Weekly Period.

11.4 Hourly Period: The maximum charge for Hourly Period service during on-peak hours shall be $2.08/MW hour and the maximum charge for Hourly Period service during off-peak hours shall be $0.99/MW hour. The total demand charge in any Daily Period, pursuant to a reservation for Hourly Period delivery, shall not exceed the Daily Period rate times the highest amount in kilowatts of Reserved Capacity in any Hourly Period during such Daily Period. In addition, the total demand charge in any Weekly Period, pursuant to a reservation for Hourly Period or Daily Period delivery, shall not exceed the Weekly Period rate times the highest amount in kilowatts of Reserved Capacity in any Hourly Period during such Weekly Period.

Billing determinants are the Transmission Customer's Reserved Capacity or Network Load for service taken at distribution Points of Delivery.

NOTE: All quantities used in calculating the Transmission Customer's Reserved Capacity or Network Load, as applicable, shall be established at the transmission system input level, i.e., shall include the transmission capacity amount associated with any losses.

SCHEDULE 12

RESERVED

SCHEDULE 13

GENERATOR IMBALANCE SERVICE

Generator Imbalance Service is provided when a difference occurs between the output of a generator located in the Transmission Provider's Control Area and a delivery schedule from that generator to (1) another Control Area or (2) a load within the Transmission Provider's Control Area over a single hour. The Transmission Provider must offer this service, to the extent it is physically feasible to do so from its resources or from resources available to it, when Transmission Service is used to deliver energy from a generator located within its Control Area. The Transmission Customer must either purchase this service from the Transmission Provider or make alternative comparable arrangements, which may include use of non-generation resources capable of providing this service, to satisfy its Generator Imbalance Service obligation. To the extent the Control Area operator performs this service for the Transmission Provider, charges to the Transmission Customer are to reflect only a pass-through of the costs charged to the Transmission Provider by that Control Area Operator. The Transmission Provider may charge a Transmission Customer a penalty for either hourly generator imbalances under this Schedule or a penalty for hourly energy imbalances under Schedule 4 for imbalances occurring during the same hour, but not both unless the imbalances aggravate rather than offset each other.

The Transmission Provider shall establish charges for generator imbalance based on the deviation bands as follows: (i) deviations within +/- 1.5 percent (with a minimum of 2 MW) of the scheduled transaction to be applied hourly to any generator imbalance that occurs as a result of the Transmission Customer's scheduled transaction(s) will be netted on a monthly basis and settled financially, at the end of each month, at 100 percent of incremental or decremental cost, (ii) deviations greater than +/- 1.5 percent up to 7.5 percent (or greater than 2 MW up to 10 MW) of the scheduled transaction to be applied hourly to any generator imbalance that occurs as a

result of the Transmission Customer's scheduled transaction(s) will be settled financially, at the end of each month, at 110 percent of incremental cost or 90 percent of decremental cost, and (iii) deviations greater than +/- 7.5 percent (or 10 MW) of the scheduled transaction to be applied hourly to any generator imbalance that occurs as a result of the Transmission Customer's scheduled transaction(s) will be settled at 125 percent of incremental cost or 75 percent of decremental cost, except that an intermittent resource will be exempt from this deviation band and will pay the deviation band charges for all deviations greater than the larger of 1.5 percent or 2 MW. An intermittent resource, for the limited purpose of this Schedule is an electric generator that is not dispatchable and cannot store its fuel source and therefore cannot respond to changes in system demand or respond to transmission security constraints.

Notwithstanding the foregoing, deviations from scheduled transactions in order to respond to directives by the Transmission Provider, a balancing authority, or a reliability coordinator shall not be subject to the deviation bands identified above and, instead, shall be settled financially, at the end of the month, at 100 percent of incremental and decremental cost. Such directives may include instructions to correct frequency decay, respond to a reserve sharing event, or change output to relieve congestion.

For purposes of this Schedule, incremental cost and decremental cost represent the Transmission Provider's actual average hourly cost of the last 10 MW dispatched for any purpose, e.g., to supply the Transmission Provider's Native Load Customers, correct imbalances, or make off-system sales, based on the replacement cost of fuel, unit heat rates, start-up costs (including any commitment and redispatch costs), incremental operation and maintenance costs, and purchased and interchange power costs and taxes, as applicable. Start-up cost will also

include the cost to cycle a unit back on-line that was removed from service to accommodate an excess Generator Imbalance purchase.

13.1

Transmission Provider utilizes PCI production cost modeling software to determine the incremental and decremental cost. Transmission Provider uses actual generation and load parameters and spot value of relevant commodities as data inputs to the production cost model.

13.1.1 Credits for Generator Imbalance Revenues

The Transmission Provider will credit revenues that it receives in excess of the incremental costs it incurs to accommodate generator imbalances ("penalty revenues") to all non-offending Transmission Customers (including Affiliated Transmission Customers) and to the Transmission Provider on behalf of its own customers (Native Load Customers). The credits shall be calculated and allocated as set out below.

The penalty revenues for which the Transmission Provider provides credits consist of the following: for each undersupply generator imbalance in excess of the deviation band in an hour, the amount by which the Transmission Provider's revenues for such imbalance pursuant to this Schedule 13 exceed the incremental cost incurred to supply that imbalance.

The imbalance penalty revenues calculated for each hour shall be credited based on the ratio of the transmission revenues from each Network Transmission Customer or Point-to-Point Transmission Customer that did not experience an energy imbalance in excess of the deviation band in an hour to the sum of the transmission revenues from all Transmission Customers that did not experience energy imbalances in the hour. A Transmission Customer that experiences an energy imbalance in excess of the first tier deviation band in an hour shall not receive a credit for that hour.

The Transmission Provider shall disburse accumulated penalty revenues, plus interest calculated in accord with 18 C.F.R. § 35.19a, when the accumulated amount of penalty revenues collected under this Schedule 13 and Section 4.1 of Schedule 4 reaches $100,000. However, effective as of April 1, 2009 and every April 1st thereafter, if a distribution has not been made within the previous twelve-month period, a distribution will be made no later than April 1 of that calendar year.

ATTACHMENT A

FORM OF SERVICE AGREEMENT FOR FIRM POINT-TO-POINT TRANSMISSION SERVICE

1.0 This Service Agreement, dated as of _____, is entered into, by and between Duke Energy Carolinas, LLC/Duke Energy Progress, LLC/Duke Energy Florida, LLC (the Transmission Provider), and _____ (Transmission Customer).

2.0 The Transmission Customer has been determined by the Transmission Provider to have a Completed Application for Firm Point-To-Point Transmission Service under the Tariff.

3.0 The Transmission Customer has provided to the Transmission Provider an Application deposit in accordance with the provisions of Section 17.3 of the Tariff.

4.0 Service under this agreement shall commence on the later of (1) the requested service commencement date, or (2) the date on which construction of any Direct Assignment Facilities and/or Network Upgrades are completed, or (3) such other date as it is permitted to become effective by the Commission. Service under this agreement shall terminate on such date as mutually agreed upon by the parties.

5.0 The Transmission Provider agrees to provide and the Transmission Customer agrees to take and pay for Firm Point-To-Point Transmission Service in accordance with the provisions of Part II of the Tariff and this Service Agreement.

5.1 The Transmission Customer is responsible for replacing Real Power Losses associated with all transmission service in accordance with Section 15.7 of the Tariff. The Transmission Customer must identify the party responsible for supplying Real Power Losses before the transaction.

6.0 Any notice or request made to or by either Party regarding this Service Agreement shall be made to the representative of the other Party as indicated below.

Transmission Provider:

_____

_____

_____

Transmission Customer:

_____

_____

_____

7.0 DEF Zone: The Transmission Customer shall comply with the power factor requirements set forth in OATT Attachment V.

8.0 The Transmission Customer will be responsible for Redispatch cost and/or Direct Assignment Facilities cost as follows

_____

_____

9.0 The Tariff is incorporated herein and made a part hereof.

IN WITNESS WHEREOF, the Parties have caused this Service Agreement to be executed by their respective authorized officials.

Transmission Provider:

By: _____ _____ _____

Name Title Date

Transmission Customer:

By: _____ _____ _____

Name Title Date

Specifications for Long-Term Firm Point-To-Point
Transmission Service

l.0 Term of Transaction: _____

Start Date: _____

Termination Date: _____

2.0 Description of capacity and energy to be transmitted by Transmission Provider including the electric Control Area in which the transaction originates.

_____

3.0 Point(s) of Receipt:_____

Delivering Party:_____

4.0 Point(s) of Delivery:_____

Receiving Party:_____

5.0 Maximum amount of capacity and energy to be transmitted (Reserved Capacity):_____

6.0 Designation of party(ies) subject to reciprocal service obligation:
_____
_____
_____

7.0 Name(s) of any Intervening Systems providing transmission service:
_____
_____

8.0 Service under this Agreement may be subject to some combination of the charges detailed below. (The appropriate charges for individual transactions will be determined in accordance with the terms and conditions of the Tariff.)

8.1 Transmission Charge:
_____

8.2 System Impact and/or Facilities Study Charge(s):
_____
_____

8.3 Direct Assignment Facilities Charge:
_____
_____

8.4 Ancillary Services Charges: _____
_____
_____
_____
_____
_____
_____

9.0 Party Responsible for Providing Real Power Losses:_____
_____
_____
_____

ATTACHMENT A-1

FORM OF SERVICE AGREEMENT FOR THE RESALE, REASSIGNMENT OR TRANSFER OF POINT-TO-POINT TRANSMISSION SERVICE

1.0 This Service Agreement, dated as of _____, is entered into, by and between _____ (the Transmission Provider), and _____ (the Assignee).

2.0 The Assignee has been determined by the Transmission Provider to be an Eligible Customer under the Tariff pursuant to which the transmission service rights to be transferred were originally obtained.

3.0 The terms and conditions for the transaction entered into under this Service Agreement shall be subject to the terms and conditions of Part II of the Transmission Provider's Tariff, except for those terms and conditions negotiated by the Reseller of the reassigned transmission capacity (pursuant to Section 23.1 of this Tariff) and the Assignee, to include: contract effective and termination dates, the amount of reassigned capacity or energy, point(s) of receipt and delivery. Changes by the Assignee to the Reseller's Points of Receipt and Points of Delivery will be subject to the provisions of Section 23.2 of this Tariff.

4.0 The Transmission Provider shall credit the Reseller for the price reflected in the Assignee's Service Agreement or the associated OASIS schedule.

5.0 Any notice or request made to or by either Party regarding this Service Agreement shall be made to the representative of the other Party as indicated below.

Transmission Provider:

_____

_____

_____

Assignee:

_____

_____

_____

6.0 The Tariff is incorporated herein and made a part hereof.

IN WITNESS WHEREOF, the Parties have caused this Service Agreement to be executed by their respective authorized officials.

Transmission Provider:

By: _____ _____ _____
Name Title Date

Assignee:

By: _____ _____ _____
Name Title Date

Specifications For The Resale, Reassignment Or Transfer of
Long-Term Firm Point-To-Point Transmission Service

1.0 Term of Transaction: _____

Start Date: _____

Termination Date: _____

2.0 Description of capacity and energy to be transmitted by Transmission Provider including the electric Control Area in which the transaction originates.

_____

3.0 Point(s) of Receipt:_____

Delivering Party:_____

4.0 Point(s) of Delivery:_____

Receiving Party:_____

5.0 Maximum amount of reassigned capacity: _____

6.0 Designation of party(ies) subject to reciprocal service obligation:

_____
_____
_____
_____

7.0 Name(s) of any Intervening Systems providing transmission service:

_____
_____

8.0 Service under this Agreement may be subject to some combination of the charges detailed below. (The appropriate charges for individual transactions will be determined in accordance with the terms and conditions of the Tariff.)

8.1 Transmission Charge: _____
_____

8.2 System Impact and/or Facilities Study Charge(s):
_____
_____

8.3 Direct Assignment Facilities Charge: _____
_____

8.4 Ancillary Services Charges: _____
_____
_____
_____
_____
_____
_____

9.0 Name of Reseller of the reassigned transmission capacity:
_____

ATTACHMENT B

FORM OF SERVICE AGREEMENT FOR NON-FIRM POINT-TO-POINT TRANSMISSION SERVICE

1.0 This Service Agreement, dated as of _____, is entered into, by and between Duke Energy Carolinas, LLC/Duke Energy Progress, LLC/Duke Energy Florida, LLC (the Transmission Provider), and _____ (Transmission Customer).

2.0 The Transmission Customer has been determined by the Transmission Provider to be a Transmission Customer under Part II of the Tariff and has filed a Completed Application for Non-Firm Point-To-Point Transmission Service in accordance with Section 18.2 of the Tariff.

3.0 Service under this Agreement shall be provided by the Transmission Provider upon request by an authorized representative of the Transmission Customer.

4.0 The Transmission Customer agrees to supply information the Transmission Provider deems reasonably necessary in accordance with Good Utility Practice in order for it to provide the requested service.

5.0 The Transmission Provider agrees to provide and the Transmission Customer agrees to take and pay for Non-Firm Point-To-Point Transmission Service in accordance with the provisions of Part II of the Tariff and this Service Agreement.

5.1 The Transmission Customer is responsible for replacing Real Power Losses associated with all Transmission Service in accordance with Section 15.7 of the Tariff. The Transmission Customer must identify the party responsible for supplying Real Power Losses before the transaction.

6.0 Any notice or request made to or by either Party regarding this Service Agreement shall be made to the representative of the other Party as indicated below.

Transmission Provider:

_____

_____

_____

Transmission Customer:

_____

_____

_____

7.0 DEF Zone: The Transmission Customer shall comply with the power factor requirements set forth in OATT Attachment V.

8.0 The Transmission Customer will be responsible for Redispatch cost and/or Direct Assignment Facilities cost as follows: _____
_____

9.0 The Tariff is incorporated herein and made a part hereof.

IN WITNESS WHEREOF, the Parties have caused this Service Agreement to be executed by their respective authorized officials.

Transmission Provider:

By: _____ _____ _____
Name Title Date

Transmission Customer:

By: _____ _____ _____
Name Title Date

ATTACHMENT C-1

METHODOLOGY TO ASSESS AVAILABLE TRANSFER CAPABILITY (DEC AND DEP ZONES)

1. Purpose and Scope

This Attachment C-1 sets forth the methodology to assess Available Transfer Capability (ATC). Any provisions herein shall be construed consistent with NERC MOD standards and any other applicable reliability standard.

Each Transmission Provider uses the same methodology and base assumptions, as documented below, to determine ATC in the Operating Horizon and similar principles and base assumptions for evaluating TSRs in the Planning horizon (beyond 13 months):

Operating Scheduling Horizon ATC

Scheduling horizon definition:

Each Transmission Provider uses a process which builds neighboring *NERC tags*, significant SDX outages, and load forecasts into the *hourly* powerflow snapshots used to determine the initial flows on the flowgates used in the AFC/ATC calculation process. This process also develops distribution factors for each snapshot which are used to quickly schedule and evaluate the impact of new TSRs on top of the calculated flowgate values. Available headroom on each path's most constraining flowgate can be sold if not limited by contract constraints.

Operating - Reservation Horizon ATC (Beyond the scheduling horizon up to 13 months):

Each Transmission Provider uses a process which builds neighboring *OASIS reservations* and SDX outages and load forecasts into the *hourly, daily, and monthly* powerflow snapshots used to determine the initial flows on the flowgates used in the ATC calculation process. This process also develops distribution factors for each snapshot which are used to quickly schedule and evaluate the impact of new TSRs on top of the calculated flowgate values. Available headroom on each path's most constraining flowgate can be sold if not limited by contract constraints.

Planning - System Impact Studies for Transmission Service Requests (Extending 13 months in the future and beyond):

System impact studies are performed by the Transmission Planning Unit for Original Transmission Service Reservation Requests, Re-direct Requests, or Requests with rollover rights in the Planning Horizon, meaning the time window extending 13 months or further in the future.

2. Definitions

The terms defined below, to the extent defined differently than in Section 1 of Part I of

the Tariff, apply only to this Attachment C-1.

2.1. Available Flowgate Capability (AFC)

A measure of the flow capability remaining on a Flowgate for further commercial activity over and above already committed uses.

2.2. Available Transfer Capability (ATC)

A measure of the transfer capability remaining in the physical transmission network for further commercial activity over and above already committed uses.

2.3. ATC Path

Any combination of Point of Receipt and Point of Delivery for which ATC is calculated; and any path posted on OASIS.

2.4. Balancing Authority

The responsible entity that integrates resource plans ahead of time, maintains load-interchange-generation balance within a Balancing Authority Area, and supports interconnection frequency in real time.

2.5. Balancing Authority Area (BA Area)

The collection of generation, transmission, and loads within the metered boundaries of the Balancing Authority. The Balancing Authority maintains load- resource balance within this area.

2.6. Capacity Benefit Margin (CBM)

The amount of firm transmission transfer capability preserved by the Transmission Service Provider for Load-Serving Entities (LSEs), whose loads are located on that Transmission Service Provider's system, to enable access by the LSEs to generation from interconnected systems to meet generation reliability requirements. Preservation of CBM for an LSE allows that entity to reduce its installed generating capacity below that which may otherwise have been necessary without interconnections to meet its generation reliability requirements. The transmission transfer capability preserved as CBM is intended to be used by the LSE only in times of emergency generation deficiencies.

2.7. Existing Transmission Commitments (ETC)

Committed uses of a Transmission Service Provider's transmission system considered when determining ATC or AFC.

2.8. Flowgate

A mathematical construct, comprised of one or more monitored transmission facilities and optionally one or more contingency facilities, used to analyze the

impact of power flows upon the bulk electric system.

2.9. Flowgate Methodology

The Flowgate Methodology is characterized by identification of key facilities as Flowgates. Total Flowgate Capabilities (TFCs) are determined based on facility ratings and voltage and stability limits. The impacts of Existing Transmission Commitments (ETCs) are determined by simulation. The impacts of ETC, Capacity Benefit Margin (CBM) and Transmission Reliability Margin (TRM) are subtracted from the Total Flowgate Capability, and Postbacks and counterflows are added, to determine the Available Flowgate Capability (AFC) value for that Flowgate. AFCs can be used to determine Available Transfer Capability (ATC).

2.10. Generator Shift Factor (GSF)

A factor to be applied to a generator's expected change in output to determine the amount of flow contribution that change in output will impose on an identified transmission facility or Flowgate.

2.11. Interconnection Reliability Operating Limit (IROL)

A System Operating Limit that, if violated, could lead to instability, uncontrolled separation, or cascading outages that adversely impact the reliability of the bulk electric system.

2.12. Load-Serving Entity (LSE)

Secures energy and Transmission Service (and related interconnected operations services) to serve the electrical demand and energy requirements of its end-use customers.

2.13. Tag Dump

A database that contains tagging data for the Eastern Interconnection.

2.14. System Data Exchange (SDX)

A database that serves as a repository for transmission outages, generation outages, and load forecast data for the Eastern Interconnection.

2.15 Line Outage Distribution Factor (LODF)

The change in MW flow of a monitored element after a contingency divided by the initial flow on the contingent element.

2.16. Outage Transfer Distribution Factor (OTDF)

In the post-contingency configuration of a system under study, the electric Power Transfer Distribution Factor (PTDF) with one or more system facilities removed from service (outaged).

2.17. Partial Path Reservations:

Each Transmission Provider considers all confirmed reservations on its respective Transmission System in the calculation of ATC. No special designation is given to a reservation at any time.

2.18. Point of Delivery (POD)

A location that the Transmission Service Provider specifies on its transmission system where an interchange transaction leaves or a Load-Serving Entity receives its energy.

2.19. Point of Receipt (POR)

A location that the Transmission Service Provider specifies on its transmission system where an interchange transaction enters or a generator delivers its output.

2.20. Power Transfer Distribution Factor (PTDF)

In the pre-contingency configuration of a system under study, a measure of the responsiveness or change in electrical loadings on transmission system facilities due to a change in electric power transfer from one area to another, expressed in percent (up to 100%) of the change in power transfer.

2.21. System Operating Limit (SOL)

The value (such as MW, MVAr, Amperes, Frequency or Volts) that satisfies the most limiting of the prescribed operating criteria for a specified system configuration to ensure operation within acceptable reliability criteria. System Operating Limits are based upon certain operating criteria. These include, but are not limited to:

- Facility ratings (applicable pre- and post-contingency equipment or facility ratings)
    - Transient stability ratings (applicable pre- and post-contingency stability limits). Voltage stability ratings (applicable pre- and post-contingency voltage stability)
    - System voltage limits (applicable pre- and post-contingency voltage limits)

2.22. Total Flowgate Capability (TFC)

The maximum flow capability on a Flowgate, is not to exceed its thermal rating, or in the case of a flowgate used to represent a specific operating constraint (such as a voltage or stability limit), is not to exceed the associated System Operating Limit.

2.23. Total Transfer Capability (TTC)

The Total Transfer Capability (TTC) is the amount of transfer that can be reliably delivered across the Transmission System for the forecasted conditions. The

Transmission Provider uses the network AFC methodology to calculate ATC, which does not use TTC as an input.

2.24. Transfer Distribution Factor (TDF)

The portion of an interchange transaction, typically expressed in per unit that flows across a transmission facility (Flowgate).

2.25. Transmission Owner

The entity that owns and maintains transmission facilities.

2.26. Transmission Reliability Margin (TRM)

The amount of transmission transfer capability necessary to provide reasonable assurance that the interconnected transmission network will be secure. TRM accounts for the inherent uncertainty in system conditions and the need for operating flexibility to ensure reliable system operation as system conditions change.

2.27. Transmission Service

Services provided to the transmission customer by the Transmission Service Provider to move energy from a Point of Receipt to a Point of Delivery.

2.28. Transmission Service Provider (TSP)

The entity that administers the transmission tariff and provides Transmission Service to transmission customers under applicable Transmission Service agreements.

3. Overview

Each Transmission Provider has chosen to use the Flowgate Methodology for calculating AFCs and the resultant ATCs for each ATC Path.

The Flowgate Methodology is based on the assumption that certain elements on the transmission system will begin to reach their limits before the other elements on the system. Therefore by monitoring these more sensitive areas on the transmission system, transfer capability calculations can be simplified in regard to the number of contingencies and monitored elements examined during each study. This allows for a greater number of studies to be conducted with simplified input assumptions. The resulting studies focus on how power would actually flow if the Transmission Service requests were to be approved.

The Flowgate Methodology involves the calculation of AFC on Flowgates modeled in the process. ATC on posted paths is then derived from the calculated AFCs.

4. Two-Part AFC Calculation Process

Each Transmission Provider's AFC calculation takes place as a two part process:

1. Model Building Process - The Transmission Provider utilizes commercially available model building software for its model building process. This tool utilizes a starting point case that is used to derive multiple powerflow snapshot models covering defined horizons. From these snapshot models, Flowgate baseflows and GSFs relative to a reference bus are calculated.

2. AFC Calculation Process - The Flowgate baseflows and GSFs are then passed to an AFC engine. The transaction TDF values are computed from the GSF values by subtracting the load GSF from the source GSF. The AFC Engine is a suite of software applications that determines Transmission Service reservation impacts, calculates AFCs and ATCs, evaluates new Transmission Service requests, applies business rules, and posts ATCs on OASIS.

5. AFC Calculation Frequency

The Transmission Provider's two-part AFC calculation process is executed at regularly scheduled intervals via automated processes. These automated processes create hourly, daily, and monthly models and derive TDFs and AFCs from those models at the following frequency:

Increment	Model Build & AFC Calculation Frequency
Hourly	Next 48 hours calculated hourly Next 168 hours (at least) calculated daily
Daily	Next 31 days (at least) calculated daily
Monthly	Next 12 months (at least) calculated daily

6. Flowgate Identification

Flowgates are identified by one of several methods:

- Flowgates identified as part of coordination agreements
- Flowgates requested for inclusion by another TSP
- Flowgates subject to interconnection-wide congestion management procedure within the last twelve months
- Flowgates identified by screening tests

6.1. Flowgates Identified As Part of Coordination Agreements

The Transmission Provider includes Flowgates to support coordination agreements.

6.2. Flowgates Requested For Inclusion by Another TSP

If another TSP asks the Transmission Provider to include in its AFC process

Flowgates that fall outside such Transmission Provider's TSP area, the Flowgate must be included in the requesting TSP's methodology, and the Flowgate must pass screening tests:

- Any generator within theTransmission Provider's TSP area has at least a 5% PTDF or OTDF impact on the Flowgate when delivered to the aggregate load of such Transmission Provider'sTSP area, or

- A transfer from the Transmission Provider's TSP area to an adjacent BA Area has at least a 5% PTDF or OTDF impact on the Flowgate.

To help manage the NC/PJM interface, lower cutoff PTDFs and OTDFs may be employed. The NC/PJM interface consists of the interfaces between the PJM BA Area and the three BA Areas on the North Carolina border with PJM: (1) DEC, (2) DEP - East (CPLE), and (3) DEP - West (CPLW).

6.3. Flowgates Subject to Interconnection-Wide Congestion Management Procedure Within the Last Twelve Months

The Transmission Provider will include any Flowgate within its Reliability Coordinator area that has been subjected to an interconnection-wide congestion management procedure within the last twelve months, unless the Flowgate was created to address temporary operating conditions.

6.4. Flowgates Identified By Screening Tests

Screening tests identify Flowgates that are not addressed by the aforementioned methods. These screening tests identify Flowgates that fall inside the Transmission Provider's TSP area (internal Flowgates) as well as Flowgates that fall outside the Transmission Provider's TSP area (external Flowgates).

Flowgates identified by screening tests are based, at a minimum, on the results of first contingency transfer analyses from adjacent BA source and sink combinations up to the path capability such that at least the first three limiting Elements and their worst associated contingency combinations with an OTDF of at least 5% are included.

7. Databases for AFC Processes

A collection of data exists for both the model building process and the AFC calculation process.

The database for the model building process includes all input and output data such as load forecasts, generation outages, transmission outages, generation block dispatch files, Flowgate definitions, POR/POD definitions including sources and sinks, tagging data from Tag Dump, starting point models, output models, GSFs, and Flowgate baseflows.

The database for the AFC calculation process (the AFC Engine) includes input and output data items such as Flowgate definitions, GSFs, Flowgate baseflows, Transmission Service requests, Transmission Service reservations, tags, TFCs, TRMs, CBMs, Contract Path Limits, counterflow percentages, calculated AFCs, external

AFCs (AFC overrides), ATCs, and Remaining Contract Path Capabilities.

8. Assumptions in the AFC Process

8.1. Generation Dispatch

Priority or block dispatch files for the Transmission Provider's TSP area and for adjacent TSP areas when available are used to dispatch the generation to meet the area load and scheduled interchange requirements. Direct dispatch files may be utilized for generators that operate to a predetermined schedule. For other external areas, if a priority or block dispatch is not used, then the generation dispatch in the starting point case is used and on-line generation is scaled to balance the load, interchange, and losses.

8.2. Load Forecasts

Load forecast data from the System Data Exchange (SDX) is used when available for modeling load in the Transmission Provider's TSP area and adjacent TSP areas. Load in the starting point cases is used for the remaining areas.

8.3. Transmission and Generation Outages

Transmission and generation outages from the SDX are used to model topology information for AFC calculations. The Transmission Provider's AFC process takes into consideration transmission and generation outages for the Transmission Provider's TSP area and adjacent TSP areas. For the Provider's immediate area, 100 kV and above transmission outages are included and units with MW ratings above 20.

8.4. Coordinated AFCs

For external Flowgates identified through AFC coordination, the AFCs that the Transmission Provider calculates will be overridden by the AFCs provided by the TSP that calculates AFC for that Flowgate.

9. AFC Calculation Equations

9.1. Firm AFC Calculations

In accordance with the MOD-030 reliability standard, the following equation is employed when calculating firm AFC for a Flowgate for a specified period:

$$AFC_F = TFC - ETC_{Fi} - CBM_i - TRM_i + Postbacks_{Fi} + Counterflows_{Fi}$$

Where:

AFC_F is the firm AFC for the Flowgate for that period

TFC is the Total Flowgate Capability of the Flowgate

ETC_{Fi} is the sum of the impacts of existing firm Transmission Service commitments for the Flowgate during that period

CBM_i is the impact of the CBM on the Flowgate during that period

TRM_i is the impact of the TRM on the Flowgate during that period

$Postbacks_{Fi}$ are changes to firm AFC due to a change in the use of Transmission Service for that period

$Counterflows_{Fi}$ are adjustments to firm AFC due to power flows in the opposite direction of the Flowgate

9.2. Non-Firm AFC Calculations

In accordance with the MOD-030 reliability standard, the following equation is employed in calculating non-firm AFC:

$$AFC_{NF} = TFC - ETC_{Fi} - ETC_{NFi} - CBM_{Si} - TRM_{Ui} + Postbacks_{NFi} + Counterflows_{NFi}$$

Where:

AFC_{NF} is the non-firm AFC for the Flowgate for that period

TFC is the Total Flowgate Capability of the Flowgate

ETC_{Fi} is the sum of the impacts of existing firm Transmission Service commitments for the Flowgate during that period.

ETC_{NFi} is the sum of the impacts of existing non-firm Transmission Service commitments for the Flowgate during that period

CBM_{Si} is the impact of any CBM schedules on the Flowgate during that period

TRM_{Ui} is the impact of the unreleased TRM on the Flowgate during that period

$Postbacks_{NFi}$ are changes to non-firm AFC due to a change in the use of Transmission Service for that period

$Counterflows_{NFi}$ are adjustments to non-firm AFC due to power flows in the opposite direction of the Flowgate

9.3. Total Flowgate Capability

Each Transmission Provider utilizes summer and winter facility ratings. As such, TFCs used in the ATC calculation will reflect the sum of these seasonal ratings of the monitored elements for thermal flowgates or the stability limit for stability flowgates. In instances where there is a difference in derived limits, such as a tie line, the most limiting parameter is used when determining TFC.

TFCs will be established at least once per calendar year. If notified of a change in the

facility rating by the Transmission Owner that would affect the TFC of a Flowgate used in the AFC process, the TFC will be updated within seven calendar days of the notification.

9.4. Existing Transmission Commitments

Flow impacts from committed uses of a TSP's transmission system are considered in the AFC calculation as ETC. For both firm and non-firm, ETC contains two major components: ETC_{model} and ETC_{AFC}. ETC_{model} is the impact of ETC accounted for in the model building process, and ETC_{AFC} is the impact of ETC accounted for in the AFC calculation process. Processes are in place to ensure that no double counting takes place between transmission commitment impacts accounted for in ETC_{model} and transmission commitment impacts accounted for in ETC_{AFC}.

$$ETC = ETC_{model} + ETC_{AFC}$$

9.4.1. ETC_{model} - All Horizons

For firm and non-firm AFC calculations in all horizons, the baseflows that are calculated from models created in the model building process are synonymous with ETC_{model}. ETC_{model} is calculated using the following:

1. The impacts of generation to load for the Transmission Provider's TSP area. These values are calculated from:

    a. Load forecast for the time period being calculated, and

2. Unit commitment and generation block dispatch, including all designated network resources needed to meet the forecast load. The impact of generation to load for TSP areas adjacent to the Transmission Provider's TSP area. These values are calculated from:

    a. Load forecast for the time period being calculated, and

    b. Unit commitment and generation block dispatch.

3. The impact of generation to load for all other TSP areas. These values are calculated from the seasonal peak load forecast included in the Multiregional Modeling Working Group (MMWG) models, SERC Near-Term Study Group (NTSG) models, or IDC models.

4. The impact of firm Network Integration Transmission Service (NITS) modeled in the starting point case for all BA Areas in the transmission model.

5. The impact of confirmed firm Point-to-Point (PTP) Transmission Service that are modeled in the starting point case for all BA Areas in the transmission model.

6. The impact of any grandfathered firm obligations that are modeled in the starting point case for all BA Areas in the transmission model.

7. Non-firm hourly AFC calculations in the operating horizon include the additional component of tag impacts from Tag Dump. Tag impacts include confirmed tags from the Transmission Provider's TSP area and adjacent TSP areas and are filtered to ensure that no double counting takes place between the reservation impacts and tag impacts in the model. Current hour real-time flows provided by the Transmission Provider's Energy Management System (EMS) may be used to adjust the calculated base flows in the model.

9.4.2. Firm ETC_{AFC-Fi} - All Horizons

For firm AFC calculations in all defined horizons, the remaining ETC impacts are captured by ETC_{AFC-Fi} in the AFC calculation process. ETC_{AFC-Fi} is calculated using the following:

1. The impact of firm NITS for the Transmission Provider's TSP area and adjacent TSP areas for which reservations are exchanged and which are not included in the model. The reservations from adjacent TSPs are filtered to ensure that no double counting takes place.

2. The impact of confirmed firm PTP Transmission Service expected to be scheduled for the Transmission Provider's TSP area and adjacent TSP areas for which reservations are exchanged and which are not included in the model. The reservations from adjacent TSPs are filtered to ensure that no double counting takes place.

3. The impact of any grandfathered firm obligations expected to be scheduled or expected to flow for adjacent TSP areas for which reservations are exchanged and which are not included in the model. The reservations from adjacent TSPs are filtered to ensure that no double counting takes place. The Transmission Provider no longer has any grandfathered firm obligations.

9.4.3 Non-Firm $ETC_{AFC-NFi}$

9.4.3.1. Non-Firm $ETC_{AFC-NFi}$ - Operating Horizon

For non-firm AFC calculations in the operating horizon, $ETC_{AFC-NFi}$ = zero, i.e., there are no additional ETC impacts beyond what is included in the model. This approach effectively releases unscheduled firm transmission to the non-firm market.

9.4.3.2. Non-Firm $ETC_{AFC-NFi}$ - Planning and Study Horizons

$ETC_{NFi-AFC}$ in the planning and study horizons is calculated using the following:

1. The impact of non-firm NITS (secondary service) for the Transmission Provider's TSP area and adjacent TSP areas for which reservations are exchanged. The reservations from adjacent TSPs are filtered to ensure that no double counting takes place.

2. The impact of confirmed non-firm PTP Transmission Service expected to be scheduled for the Transmission Provider's TSP area and adjacent TSP areas for which reservations are exchanged. The reservations from adjacent TSPs are filtered to ensure that no double counting takes place.

3. The impact of any grandfathered non-firm obligations expected to be scheduled or expected to flow for adjacent TSP areas for which reservations are exchanged. The reservations from adjacent TSPs are filtered to ensure that no double counting takes place. The Transmission Provider has no grandfathered non-firm obligations.

9.4.4. Transmission Service Request Rollover Rights Impact

Transmission Service reservations that have met the requirements for rollover service are considered as impact in the ETC_{AFC} calculation for the time periods when the rollover would occur.

9.5. Counterflows

When applying transmission reservation impacts in the opposite direction of flow on a Flowgate in the AFC calculations, counterflow assumptions are used. Counterflow impact percentages are defined for each Flowgate and address:

- Firm reservation counterflow impact on firm AFC calculations
- Firm reservation counterflow impact on non-firm AFC calculations
- Non-firm reservation counterflow impact on non-firm AFC calculations

Counterflow assumptions are based on operating experience of normal Flowgate flows. At times, a Flowgate may experience higher or lower than normal counterflows. If real-time or expected operating conditions change to the extent that higher or lower than normal counterflows are expected, the counterflow assumptions for the Flowgate can be changed to reflect the new conditions.
Counterflow assumptions are reflected in the AFC process as a Flowgate attribute.

9.6. Postbacks

The postback component of the AFC equation is implicit in the ETC_{AFC} component.

Changes in reservation status are captured in the AFC Engine and are incorporated into the AFC values.

9.7. Capacity Benefit Margin (CBM)

The Transmission Provider has not defined a need for CBM on any of its interfaces in the Operating, Planning, or Study Horizons. As such, the importing and exporting CBM on all interfaces is set to zero.

The Transmission Provider does not address generation reliability assessments through the utilization of CBM, so this document does not contain the methodology and assumptions that the Transmission Provider uses for generation reliability requirements.

9.8. Transmission Reliability Margin

The Each Transmission Provider is a party to a reserve sharing agreement amongst DEC, DEP, South Carolina Electric & Gas Company, South Carolina Public Service Authority, and Virginia Electric and Power Company. This agreement requires that each participating company provide a contingency reserve commitment to the other participants. Each participating company is required to maintain their share of the total contingency reserve based on a formula that takes into account each company's annual peak demand and largest resource.

The Transmission Provider allocates TRM across its ATC Paths based on contractual obligations to supply and receive operating reserves. Currently, the only contractual obligation the Transmission Provider has is with the participants of the reserve sharing agreement as stated above. The contractual requirements for the reserve sharing participants are reviewed, established, and updated on an annual basis. The Transmission Provider allocates these contractual obligations to its ATC Paths through the utilization of TRM, based on the following methodology:

- Imports - TRM for ATC Paths sinking in the Transmission Provider's BA Area from participating BA Areas is set to the opposing BA Area's share of the reserve requirement. TRM on ATC Paths sinking in the Transmission Provider's BA Area from non-participating BA Areas is set to zero, until such time as contingency reserves are identified and contracts have been established for those interfaces.

- Exports - TRM for ATC Paths sourcing from the Transmission Provider's BA Area to participating BA Areas is set to the Transmission Provider's share of the reserve requirement. TRM on ATC Paths sourcing from the Duke Energy Carolinas BA Area to non-participating BA Areas is set to zero, until such time as contingency reserves are identified and contracts have been established for those interfaces. It should be noted that the TRM for exports to Duke Energy Progress from Duke Energy Carolinas are split between CPLE and CPLW.

Note that imports/exports from/to Virginia Electric and Power Company are

scheduled through the CPLE BA Area.

The Transmission Provider's flowgate TRM is based on reserve sharing requirements and the worst impact of losing any one generator in its Balancing Authority Area and select generators outside of said area and the Interconnection responding. In order to account for the TRM in the AFC process, it is necessary to convert the reserve sharing requirements on the interfaces and generator inrush to Flowgate-based values. The conversion process simulates the simultaneous import from all participating companies, the export of the Transmission Provider's reserve requirement to each participating entity individually, and the generator inrush following the loss of the most impactful generator to the flowgate being studied. The worst impact on each Flowgate determines the TRM amount allocated to that Flowgate. These Flowgate-based TRM values will be reestablished when the path-based reserve sharing TRM amounts are recalculated. Additionally, the Flowgate-based TRM values will be established for any Flowgate added to the transfer capability calculation process.

9.8.1. Use of TRM

TRM can be utilized by any LSE inside the Transmission Provider's Balancing Authority Area under the following conditions:

1. Presence of a disturbance (loss of firm resource) invoking an Emergency Reserve Sharing Agreement;
2. Declaration of an Energy Emergency Alert (EEA) due to insufficient resources (the LOAD SERVING ENTITY has exhausted all other options and can no longer provide its customers' expected energy requirements). Any load serving entity within the Transmission Provider's Balancing Authority Area requesting use of TRM must request the Transmission Provider to request the VACAR-South Reliability Coordinator Agent to post an EEA prior to the Transmission Provider granting use of TRM.
3. Once a customer is allowed access to TRM, the capacity is made available as firm network service.

10. ATC Calculation

10.1. Converting AFC to ATC

When converting AFCs to ATCs, the following equations are used:

$$ATC_{AFC} = \min(P)$$

$$P = \{PATC_1, PATC_2, \ldots PATC_n\}$$

$$PATC_n = \frac{AFC_n}{DF_{np}}$$

Where:

ATC_{AFC} = the ATC derived from the AFC process

P = is the set of partial ATCs for all impacted Flowgates honored by Duke Energy Carolinas

$PATC_n$ = the partial ATC for a path relative to a Flowgate *n*

AFC_n = the AFC for Flowgate *n*

DF_{np} = the distribution factor for Flowgate *n* relative to path *p*

10.2. Contract Path Limit

The interface between the Transmission Provider's transmission system and that of adjacent BA Areas is considered to be an import/export path. Each import and export path is associated with a Contract Path Limit. This Contract Path Limit is the sum of the ratings of the ties with the Transmission Provider and the adjacent BA Area.

The Transmission Provider's ATC calculation takes into consideration Contract Path Limits. This is accomplished by calculating Remaining Contract Path Capability (RCPC) for import and export paths in parallel with the AFC process. RCPC on import and export paths is calculated according to the following formula:

$$RCPC_p = Contract\ Path\ Limit_p - \sum Reservations\ or\ Schedules_p$$

Where:

$RCPC_p$ = The Remaining Contract Path Capability on import or export path *p*

Contract Path $Limit_p$ = The Contract Path Limit on import or export path *p*

Reservations or $Schedules_p$ = Reservations or Schedules (depending on the horizon) reserved or scheduled on import or export path *p*

RCPC for an import or export path is decremented based on the POR/POD of the reservation or schedule, and these reservations/schedules, whether firm or non- firm, are not netted. In other words, a reservation or schedule on the export path "Duke-to-Neighbor A" does not impact the RCPC for the import path "Neighbor A-to-Duke", and vice versa.

Pass-through reservations/schedules decrement two separate import/export paths - the import path from the POR and the export path to the POD. The RCPC used in the evaluation of a pass-through Transmission Service request is the lesser of the RCPC on the corresponding import and export path.

10.3. ATC on Posted Paths

When determining $ATC_{\text{posted path}}$, the following equation is used:

$$ATC_{posted\ path} = min[ATC_{AFC}, RCPC_p]$$

Where:

$ATC_{posted\ path}$ = the Available Transfer Capability for that path that is posted on OASIS

ATC_{AFC} = the ATC for that posted path derived from the AFC process

$RCPC_p$ = Remaining Contract Path Capability for the applicable import/export path *p*

11. System Impact Studies for Transmission Service Requests in the Planning Horizon (Extending 13 months in the future and beyond)

System Impact Studies are performed by the Transmission Planning Unit for Original Transmission Service Reservation Requests, Re-direct Requests, or Requests with rollover rights in the Planning Horizon, meaning the time window extending 13 months or further in the future. These studies are performed using a regional base case, applying reliability margins, and using similar concepts when evaluating the impact of the Transmission Service Request on the DEP system. The Request is accepted or denied based on the evaluation of results versus Voltage/Stability limits, contract path limits, and thermal facility limits.

12. Implementation of the Rockingham Phase Shifting Transformers

DEP will operate the two Rockingham Substation Phase Shifting Transformers located on each of the Lilesville-Rockingham White and Black transmission lines (Phase Shifters) in a manner consistent with the Phase Angle Regulating Transformer Operating Procedure posted on the Duke Energy Progress OASIS (Operating Procedures). The ATC flowgates which, if applicable, monitor the Harrisburg-Oakboro Black and White transmission lines will be modelled to include the operation of the Phase Shifters in accordance with the Operating Procedures.

13. Process Flow Diagrams

ATC Process Flow

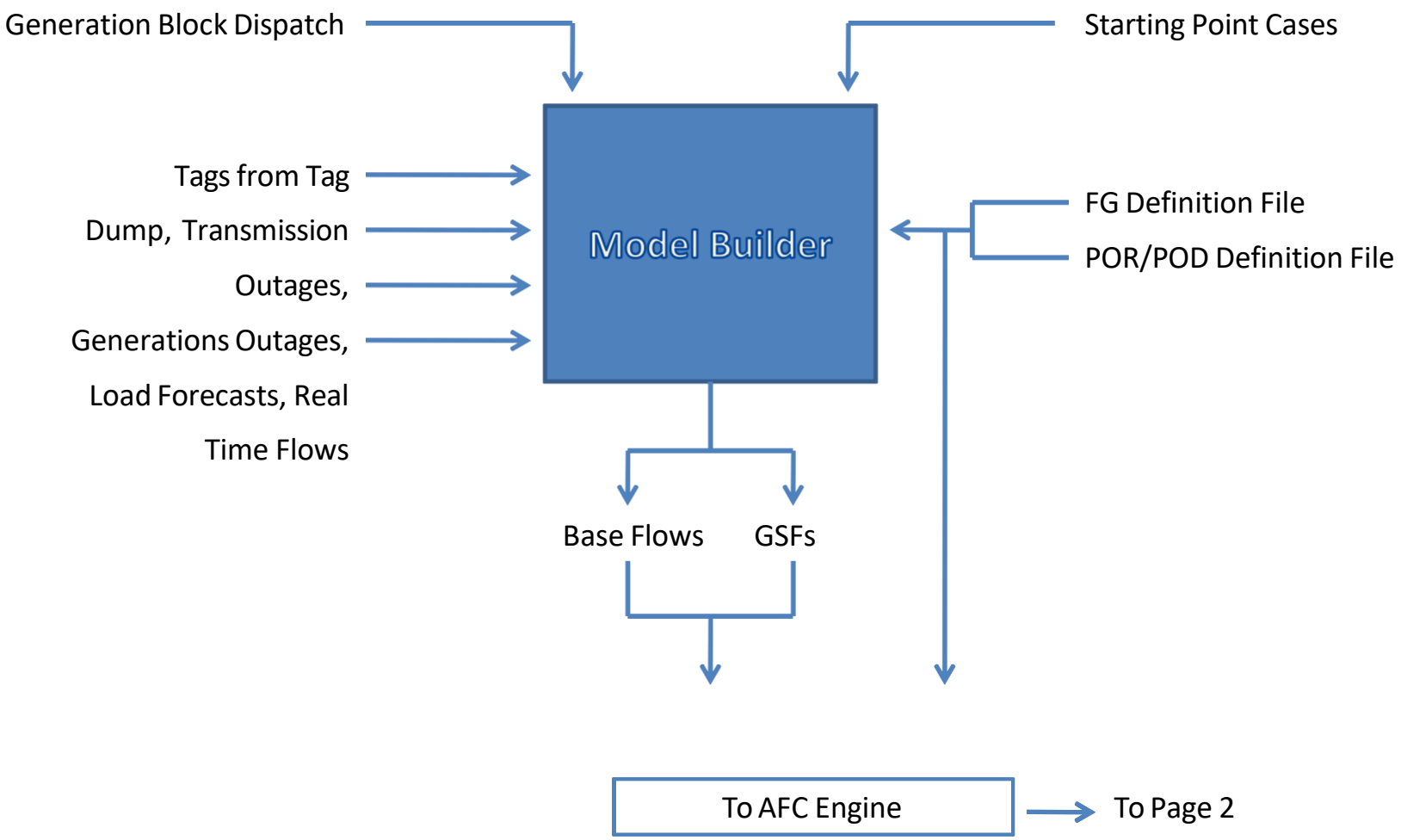

ATC Process Flow

ATC Process Flow

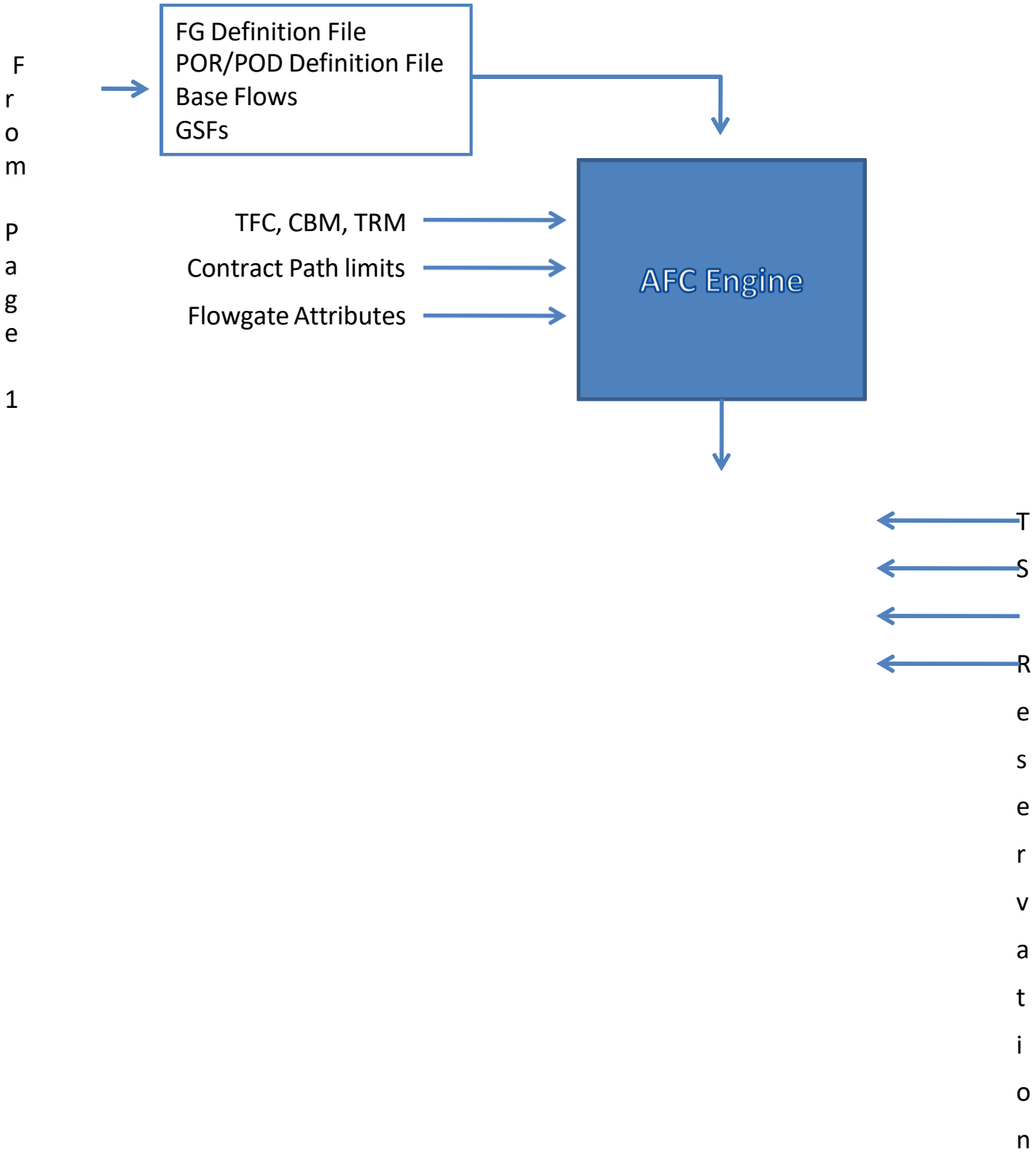

ATC Process Flow

s

T
S

R
e
q
u
e
s
t
s

A
F
C

O
v
e
r
r
i
d
e

ATC Process Flow

s

T
a
g
s

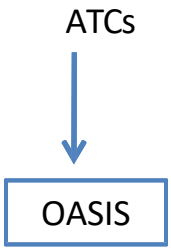

ATTACHMENT C-2

METHODOLOGY TO ASSESS AVAILABLE TRANSFER CAPABILITY (DEF ZONE)

This Attachment C-2 describes the DEF methodology used to assess Total Transfer Capability ("TTC") and Available Transfer Capability ("ATC"). Members of the Florida Reliability Coordinating Council (FRCC) have formed the Florida Transmission Capability Determination Group (FTCDG) in an effort to provide ATC values to the regional electric market that are transparent, consistent, timely, and as accurate as possible. The FTCDG has contracted with Open Access Technology International, Inc. (OATI) to provide and host an OATI TTC Calculator Software that will produce ATC and TTC values for the region.

MATHEMATICAL ALGORITHM:

The table below describes the mathematical algorithms used to calculate firm and non-firm ATC for the scheduling, operating and planning horizons.

A more detailed description of DEF's ATC algorithms may be accessed on DEF's OASIS at http://www.oasis.oati.com/FPC/FPCdocs/ATC_Mathematical_Algorithm.pdf

	CALCULATION HORIZON		
	SCHEDULING	**OPERATING**	**PLANNING**
FIRM	N/A	ATC = TTC - ETC - TRM - CBM	ATC = TTC - ETC - TRM - CBM
NON-FIRM	ATC = TTC - ETC	ATC = TTC - ETC - CBM	ATC = TTC - ETC - CBM

The Scheduling Horizon is the same day and real time.
The ATC Operating Horizon is day ahead and pre-schedule.
The ATC Planning Horizon is beyond the operating horizon out to month 13.

N/A - FIRM PRODUCTS DO NOT EXIST IN SCHEDULING HORIZON.

ATC, TTC, ETC, AND TRM CALCULATION:

ATC values are determined using an area interchange method to determine ATC on paths within the FRCC.

Loadflow Model Development

Base models are derived from the current FRCC Transmission Working Group ("TWG") seasonal models by the FTCDG and represent seasonal load profiles, in-service generating units, in-service transmission facilities and firm interchange contracts according to NERC guidelines. FTCDG provides summer and winter base

models to OATI. OATI creates loadflow models of planned operations, expected load levels, facility outages by using current data from the FRCC FTMS. The FTCDG base model currently includes the total load; therefore, interruptible demands are not utilized in determining ATC values.

TTC and ATC Calculation

TTC values are calculated each time the OATI TTC Calculator Software runs. At a minimum, the OATI TTC Calculator Software runs once every hour to calculate TTC values for the next 72 hours. Additionally, the OATI TTC Calculator Software runs at least once a day to calculate daily TTC values for the next 13 months. Firm and non-firm ATC values are determined using the mathematical algorithms for each calculation horizon.

Process to Calculate TTC

TTC definition:
Total Transfer Capability (TTC) – The amount of electric power that can be moved or transferred reliably from one area to another area of the interconnected transmission systems by way of all transmission lines (or paths) between those areas under specified system conditions.

OATI calculates the First Contingency Incremental Transfer Capability ("FCITC"), between two areas that define a transmission path; the "From" area and the "To" area. The generation is economically increased in the "From" area and decreased in the "To" area while monitoring for contingency overload conditions. The generation that participates in the "From" and "To" is determined by a FTCDG approved economic merit order.

The TTC is the lower of the contractual limitations for a path and the FCITC added to the "impacts of firm transmission services." The value for this "impact of firm transmission service" is based on the transactions existing in the study model.

OATI utilizes a discrete contingency and monitor list supplied by FTCDG for FCITC calculations:

Monitored facilities are those facilities that are monitored for overloads and low voltage conditions (limits) under normal or first contingency analysis when calculating TTC. Monitored facilities for use in TTC calculations will include facilities operated at 69 kV and above and all tie lines between Transmission Providers. Other facilities operated at lower voltage levels may be added to the monitored facilities list. The FTCDG is responsible for compilation of the monitored facilities list, and uses the current monitored facilities list for the FRCC Reliability Coordinator and FRCC Operations Planning Coordinator functions as a starting point.

Critical contingencies are those facilities that, when outaged are deemed to have an adverse impact on the reliability of the transmission network. These facilities may be transmission facilities, including multi-terminal lines, or generating units. All tie-lines regardless of voltage

and the largest unit of each control area will be considered critical contingencies. The FTCDG is responsible for compilation of the critical contingencies list for TTC calculations.

PROCESS FLOW DIAGRAM

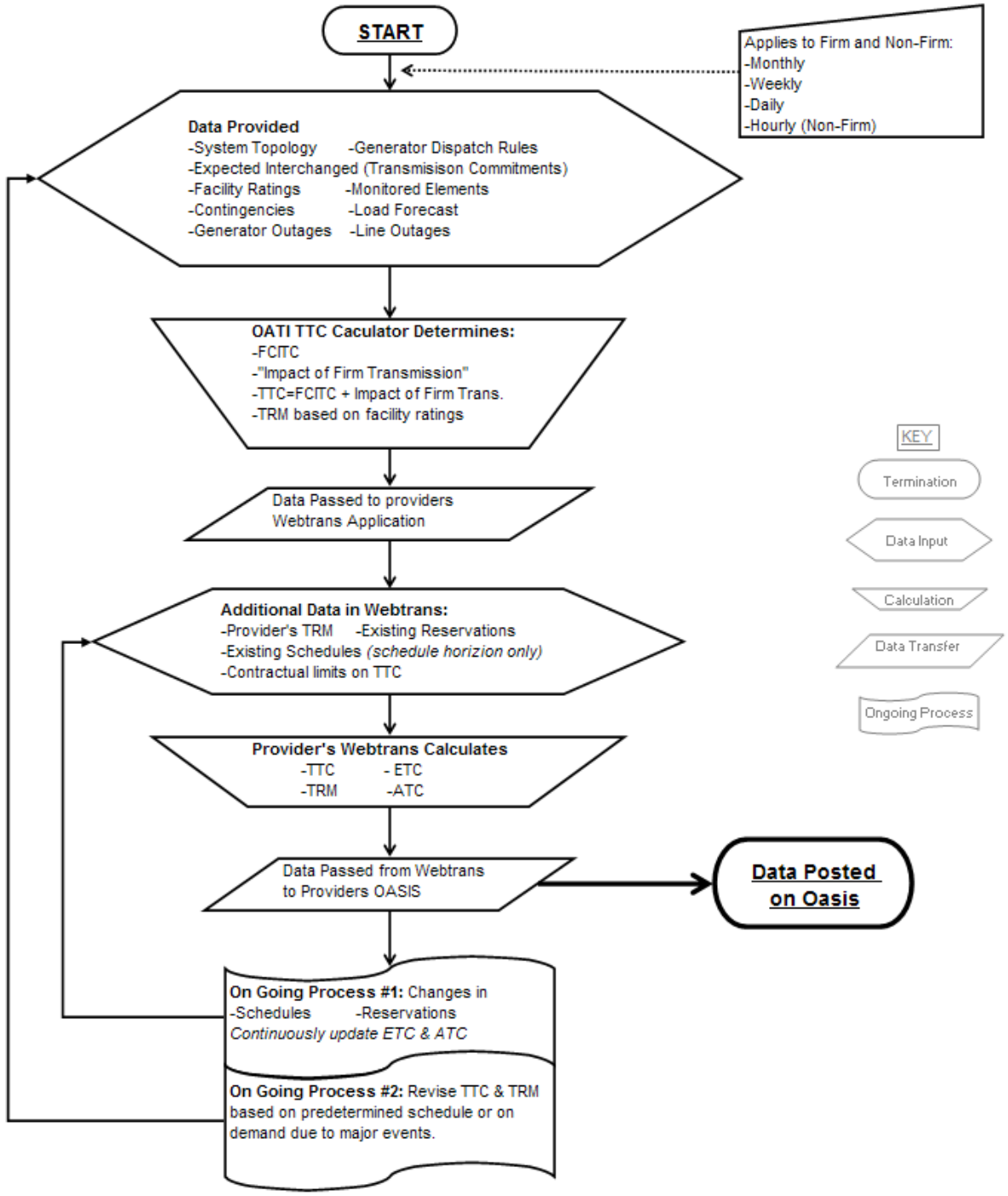

Existing Transmission Commitments (ETC)

Definition – DEF defines ETC as the committed uses of the DEF transmission system considered when determining Available Transfer Capability.

ETC Calculation Methods - To set aside transfer capability for native load and non-OATT customers for the operating and planning horizons, DEF explicitly models the transactions and load using load forecasting when appropriate. The generation assumed to participate for native load and non-OATT customer impact is determined by using a FTCDG approved economic merit order. Point to Point (PTP) OATT transactions are modeled explicitly and the generation assumed to participate for Point to Point (PTP) OATT is determined by using an FTCDG approved economic merit order. For models at various load levels the loads are scaled down, and generation is adjusted using the economic merit order.

Rollover – DEF assumes in ATC determinations that existing transactions eligible for rollover by a customer will rollover. If a customer has elected to not exercise rollover rights, DEF would exclude that transaction from ATC determinations.

Release of unscheduled Firm ATC reservations – Firm transmission service reservation capacity not tagged for next day by noon (12:00) day prior release time will be included in the non-firm ATC values posted for the entire next day (24 hours) beginning at midnight (00:00). The release is accomplished automatically on OASIS by comparing the reserved ATC and the pending or committed schedules (tags). The tags have an OASIS reservation number on them, and when the tag does not exist at all or in models when the tag scheduled ATC is less than the OASIS reservation amount, the unscheduled portion is not subtracted from TTC in the ATC algorithm, and thus the capacity is released.

TRM

Transmission Reliability Margin (TRM) - The amount of transmission transfer capability necessary to provide reasonable assurance that the interconnected transmission network will be secure. TRM accounts for the inherent uncertainty in system conditions and the need for operating flexibility to ensure reliable system operation as system conditions change.

There are two portions to the TRM values used in the determination of ATC:

1.) An FTCDG value that represents difference between the higher rating some entities are willing to use for Non Firm transactions, and the lower rating they use for Firm Transactions. The second value is the DEF Specific TRM. The FTCDG value is added to DEF's specific TRM to reach the total TRM value. The FTCDG wide TRM value can frequently be zero. The TTC is based on the "non-firm" rating FCITC run, however some FTCDG members allow a higher non-firm rating on facilities then the rating they use for firm transactions. An FCITC is calculated using this firm rating and the difference between this firm FCITC and the non-firm FCITC is the FTCDG TRM value.

2.) The DEF specific TRM is posted at the following link

http://www.oatioasis.com/fpc/

Transmission Reliability Margin (TRM) Calculation Methodology for DEF specific TRM – DEF determines the appropriate amount of TRM at each of its interfaces based upon the operating reserve obligations contained in the FRCC Operating Reserve Policy. On most paths the TRM is based upon a maximum delivered or received reserve obligation.

Export Path TRM – DEF has an obligation to deliver up to 193 MW for a reserve call, thus the TRM is 193 MW on most DEF export paths. Due to the small size of some reserve share participants, a reserve call that would require DEF to deliver 193 MW of operating reserves is not possible. For those situations, the TRM is reduced to DEF's share (20%) of the MW output of the reserve sharing participant's largest generator. DEF has a maximum reserve obligation of 20% for each reserve call.

Import Path TRM – DEF must be able to receive up to the maximum amount of operating reserves allowed by the Reserve Sharing Agreement. On import paths the TRM is set to the maximum reserve sharing obligation to be delivered from each reserve sharing participant. The TRM for import paths varies between 0 MW and 386 MW depending upon the reserve obligations for the particular path.

Pass Through Path TRM – The TRM on pass through paths is the larger of the operating reserve requirement of the POD and POR for each path. The POR operating reserve requirement for pass through paths is adjusted by a loop flow factor where appropriate. For example, the reserve requirement to deliver to DEF may be 100 MW for a particular POR, however a pass through path from the same POR to a POD may only be impacted by 50 MW for the 100 MW reserve obligation, thus the loop flow factor is 0.5, and the resulting TRM is 100*0.5 = 50 MW.

Use of TRM – DEF subtracts TRM from TTC for all firm products in all of the time horizons. To the extent that system conditions allow without adversely impacting reliability, TRM will be made available for transmission service on a nonfirm basis.

CBM

Capacity Benefit Margin (CBM) – The amount of firm transmission transfer capability preserved by the transmission provider for Load-Serving Entities (LSEs), whose loads are located on that Transmission Service Provider's system, to enable access by the LSEs to generation from interconnected systems to meet generation reliability requirements. Preservation of CBM for an LSE allows that entity to reduce its installed generating capacity below that which may otherwise have been necessary without interconnections to meet its generation reliability requirements. The transmission transfer capability preserved as CBM is intended to be used by the LSE only in times of emergency generation deficiencies.

DEF's Resource Planning group performs its resource adequacy analysis and incorporates both deterministic and probabilistic methods in its assessment of generation reliability. This

assessment is accomplished by system reliability analyses which are typically based on a dual planning criteria of a minimum peak period reserve margin of 20% (DEF applies this to both summer and winter peaks) and a maximum loss-of-load probability (LOLP) of 0.1 day per year. Both of these criteria are commonly used throughout the utility industry. Historically, two types of methodologies, deterministic and probabilistic, have been employed in system reliability analysis. The calculation of excess firm capacity at the annual system peaks (reserve margin) is the most common method, and this relatively simple deterministic calculation can be performed on a spreadsheet. It provides an indication of the adequacy of a generating system's capacity resources compared to its native load during peak periods. However, deterministic methods do not take into account probabilistic-related elements such as the impact of individual unit failures. For example: two 50 MW units which can be counted on to run 90% of the time are more valuable in regard to utility system reliability than is one 100 MW unit which can also be counted on to run 90% of the time. Probabilistic methods also recognize the value of being part of an interconnected system with access to multiple capacity sources. For this reason, probabilistic methodologies have been used to provide an additional perspective on the generation resource adequacy of a generating system. There are a number of probabilistic methods that are being used to perform system reliability analyses. Of these, the most widely used is loss-of-load probability or LOLP. Simply stated, LOLP is an index of how well a generating system may be able to meet its demand (i.e., a measure of how often load may exceed available resources). In contrast to reserve margin, the calculation of LOLP looks at the daily peak demands for each year, while taking into consideration such probabilistic events as the unavailability of individual generators due to scheduled maintenance or forced outages. LOLP is expressed in units of the "number of times per year" that the system demand could not be served. The standard for LOLP accepted throughout the industry is a maximum of 0.1 day per year. This analysis requires a more complicated calculation methodology than does the reserve margin analysis. LOLP analyses are typically carried out using computer software models such as the Tie Line Assistance and Generation Reliability (TIGER) program used by DEF.

The result of this step of resource planning is a projection of how many MW of resources are needed to meet both reserve margin and LOLP criteria, and thus maintain system reliability.

Determination of CBM

DEF has adopted the following CBM Methodology:

DEF currently has zero CBM reserved on each of its interfaces (posted paths). DEF's CBM on each interface is currently established through the transmission provider functions within DEF.

Since DEF does not calculate a CBM component to meet any resource adequacy reliability requirement; CBM on each of DEF's path's where DEF is the POD will be 0 and will not be included in the calculations.

ATTACHMENT D

METHODOLOGY FOR COMPLETING A SYSTEM IMPACT STUDY

A. DEP Zone

Upon receipt of an executed System Impact Study Agreement, DEP will perform studies using its power flow models to identify any system constraints resulting from the requested service. Using these models, DEP evaluates its present and planned transmission system for conformance to its Transmission Planning Criteria and Assessment Practices. These Transmission Planning Criteria and Assessment Practices, which DEP uses to evaluate System Impact Study requests, are filed annually in FERC Form No. 715, "Annual Transmission Planning and Evaluation Report." DEP will use the same procedure, assumptions and criteria in performing a System Impact Study for an Eligible Customer as it uses when performing studies for its own uses of the Transmission System.

DEP will notify the Eligible Customer upon completion of the System Impact Study if the Transmission System will be adequate to accommodate all or part of a request for service or that no costs are likely to be incurred for new transmission facilities or upgrades. Within fifteen (15) days of completion of the System Impact Study the Eligible Customer must execute a Service Agreement or the Application will be deemed terminated and withdrawn.

If the System Impact Study indicates that additions or upgrades to the Transmission System are needed to supply the Eligible Customer's service request, DEP, within thirty (30) days of completion of the System Impact Study, will tender to the Eligible Customer a Facilities Study Agreement pursuant to which the Eligible Customer must agree to reimburse DEP for performing the required Facilities Study. Upon receipt of an executed Facilities Study

Agreement, DEP will use due diligence to complete the required Facilities Study within a sixty (60) day period.

DEP will use due diligence to complete the required System Impact Study within a sixty (60) day period. In the event that DEP is unable to complete the required System Impact Study within such time period, DEP will so notify the Eligible Customer and provide an estimated completion date along with an explanation of the reasons why additional time is required to complete the required studies.

B. DEF Zone

The Transmission Provider will evaluate the impact of a prospective firm transmission transaction by modeling the transaction using an applicable transmission system electrical model. This evaluation will consider the following:

- The Transmission Provider's reliability criteria.
- Current and reasonably forecasted loads of the Transmission Provider's Native Load Customers and Network Integration Transmission service customers on the Transmission Provider's transmission system.
- Pending and existing firm transmission transactions that coincide with the time requested for the prospective transaction, modeled on a simultaneous basis.

Analysis will involve using the appropriate transmission system electrical model in a load flow and/or transient stability program to model normal and various first contingency situations that may occur, and determining whether system response meets acceptable criteria considering the prospective transaction. In general, this involves running simulations for the loss of any single line, generator, or transformer, with any one generator scheduled out for maintenance. The Transmission Provider will normally run this transmission system analysis from minimum to peak load conditions for possible contingencies. If appropriate, additional studies would be performed to determine transmission system response to less probable contingency criteria, to

assure the system meets Transmission Provider, FRCC and SERC planning guidelines for more severe outages. These studies would include the loss of multiple generators or lines and combinations of each. These less probable scenarios are also evaluated at various load levels, since some of the most severe situations occur at average or minimum load conditions. In particular, critical fault clearing times are typically the shortest (most severe) at minimum load conditions, with just a few large base load units supplying the system needs. For more detail on the Transmission Provider's planning criteria please refer to the most current FERC Form No. 715 "*Annual Transmission Planning and Evaluation Report*" on file with the FERC.

The Transmission Provider also will evaluate the impact of a prospective firm transaction on the critical Transmission Provider interfaces. Transfer analysis will be conducted in accordance with the NERC reference document for calculating and reporting the electric power transfer capability of interconnected electric systems titled *Transmission Transfer Capability*, dated May 1995, as amended or supplemented from time to time. This transfer analysis will consider the simultaneous effect of all existing and pending firm power transactions of the Transmission Provider's system with the prospective transaction simulated at the same time. The amount of electric power, incremental above normal base power transfers, that can be transferred over the Transmission Provider's Transmission System in a reliable manner will be based on all of the following criteria:

- For the existing or planned system configuration under normal conditions, all facility loadings will be within normal ratings and all voltages within normal limits.

- The Transmission Provider's Transmission System should be capable of absorbing the dynamic power swings and remaining stable following a disturbance that results in the loss of any single electric system element, such as a transmission line, transformer, or generating unit.

- After the dynamic power swings subside following a disturbance that results in the loss of any single electric system element as described above, all transmission facility loading should be within emergency ratings and all voltages should be within emergency limits.

The prospective transaction will also be evaluated in term of impact on other major interfaces in which the Transmission Provider has obligations to abide by defined procedures. As an example, transfer limit studies for the Florida-Georgia transmission Interface have very specific procedures that have been agreed to by FRCC utilities. These procedures and the currently accepted limits can be obtained from the FRCC and must be followed to assure reasonable results. Failure to follow the recommended methodology will result in overly optimistic reactive reserves, and thus optimistic transfer limits.

C. DEC Zone

Upon receipt of an executed System Impact Study Agreement, the Transmission Provider will perform studies using power flow, transfer, stability, fault and other analyses as necessary and appropriate to determine whether sufficient transmission capability is available and to identify any system constraints resulting from the requested transmission service. More detailed criteria and processes utilized by the Transmission Provider in performing a System Impact Study are set forth in the Transmission Provider's annual FERC Form No. 715 submittal. The Transmission Provider will use the same study approach in completing the studies for a Transmission Customer as it uses when completing such studies for itself.

The Transmission Provider subscribes to all applicable North American Electric Reliability Corporation (NERC) and SERC Electric Reliability Corporation (SERC) Transmission Reliability criteria for both its own transmission system studies and System Impact Studies. Specifically, the Transmission Provider subscribes to NERC's Transmission Transfer Capability document and SERC's Planning Principles and Guides. In addition, the Transmission

Provider subscribes to its own Reliability Guidelines for its own transmission system studies and System Impact Studies.

The Transmission Provider's Reliability Guidelines are established to ensure that the Transmission Provider's transmission network is capable of moving power throughout its system while maintaining acceptable voltage and thermal loading levels, during both normal and contingency conditions. The Reliability Guidelines, which are filed with FERC as part of the FERC Form No. 715, include transmission planning objectives, planning assumptions, study practices, and planning guidelines.

ATTACHMENT E

INDEX OF POINT-TO-POINT TRANSMISSION SERVICE CUSTOMERS

See Transmission Provider's Electric Quarterly Report at the following Internet address:

http://www.ferc.gov/docs-filing/eqr/data/spreadsheet.asp

ATTACHMENT F- 1

FORM OF SERVICE AGREEMENT FOR NETWORK INTEGRATION TRANSMISSION SERVICE (DEP ZONE AND DEF ZONE)

1.0 This Service Agreement, dated as of _____, is entered into, by and between Duke Energy Progress, LLC/Duke Energy Florida, LLC (the Transmission Provider), and _____ ("Transmission Customer").

2.0 The Transmission Customer has been determined by the Transmission Provider to have a Completed Application for Network Integration Transmission Service under the Tariff.

3.0 The Transmission Customer has provided to the Transmission Provider an Application deposit in the amount of $_____, in accordance with the provisions of Section 29.2 of the Tariff or has met the creditworthiness standards of Attachment O of the Tariff. In the event that the Customer does not take service for any reason, the Transmission Provider will return the deposit, with interest at the rate specified in 18 C.F.R. § 35.19a(a)(2)(iii), less any costs the Transmission Provider incurred in processing the Application (including, where necessary, the performance of a System Impact Study; the Transmission Provider will provide the Applicant with a statement identifying the costs incurred.

4.0 Service under this agreement shall commence on the later of (1) _____, or (2) the date on which construction of any Direct Assignment Facilities and/or Network Upgrades are completed, or (3) such other date as it is permitted to become effective by the Commission. Service under this Service Agreement shall terminate on _____.

5.0 The Transmission Provider agrees to provide and the Transmission Customer agrees to take and pay for Network Integration Transmission Service in accordance with the provisions of Part III of the Tariff and this Service Agreement.

5.1 The Transmission Customer is responsible for replacing Real Power Losses associated with all transmission service in accordance with Section 28.5 of the Tariff. The Transmission Customer must identify the party responsible for supplying Real Power Losses before the transaction.

6.0 Any notice or request made to or by either Party regarding this Service Agreement shall be made to the representative of the other Party as indicated below.

Transmission Provider:

_____
_____
_____

Transmission Customer:

_____
_____
_____

7.0 The Tariff, Specifications for Network Integration Transmission Service and the Network Operating Agreement, all may be amended from time to time, are incorporated herein and made a part hereof.

8.0 Service under this Service Agreement will be subject to some combination of the agreed-upon charges detailed below:

8.1 Transmission Charge: _____

8.2 System Impact and/or Facilities Study Charge(s):
_____
_____

8.3 Direct Assignment Facilities Charge:_____
_____

8.4 Ancillary Services Charges: _____
_____
_____
_____
_____
_____
_____

9.0 Nothing contained herein shall be construed as affecting in any way the Transmission Provider's right to unilaterally make application to the Federal Energy Regulatory Commission, or other regulatory agency having jurisdiction, for any change in the Tariff or this Service Agreement under Section 205 of the Federal Power Act, or other applicable statute, and any rules and regulations promulgated thereunder; or the Transmission Customer's rights under the Federal Power Act and rules and regulations promulgated thereunder.

10.0 The Transmission Customer will be responsible for Distribution Substation Service charges, Redispatch cost, Network Upgrade, and/or Direct Assignment Facilities cost as follows:

_____

_____

_____

IN WITNESS WHEREOF, the Parties have caused this Service Agreement to be executed by their respective authorized officials.

Transmission Provider:

By:_____ _____ _____

Name Title Date

Transmission Customer:

By:_____ _____ _____

Name Title Date

Specifications For Network Integration
Transmission Service

1.0 Term of Transaction: _____

Start Date: _____

Termination Date: _____

2.0 Description of capacity and energy to be transmitted by Transmission Provider including the electric Control Area in which the transaction originates.
_____

3.0 Network Resources

(1) Transmission Customer Generation Owned or Leased:

Resource	Capacity	Capacity Designated as Network Resource, including summer and winter ratings

(2) Transmission Customer Generation Purchased:

Source	Capacity

Total Network Resources: (1) + (2) =

4.0 Network Load

(1) Transmission Customer Network Load:

Network Load	Transmission Voltage Level

Total Network Load at time of most recent Zonal annual peak load:

5.0 _____
_____

6.0 Designation of party(ies) subject to reciprocal service obligation:
_____
_____
_____
_____

7.0 Name(s) of any Intervening Systems providing transmission service:
_____
_____

8.0 Party Responsible for Providing Real Power Losses:

_____
_____
_____
_____

ATTACHMENT F- 2

FORM OF SERVICE AGREEMENT FOR NETWORK INTEGRATION TRANSMISSION SERVICE (DEC ZONE)

OATT SERVICE AGREEMENT NO. XXX

SERVICE AGREEMENT

FOR

NETWORK INTEGRATION TRANSMISSION SERVICE

BETWEEN

DUKE ENERGY CAROLINAS, LLC

AND

CUSTOMER

Service Agreement For
Network Integration Transmission Service

1.0 PARTIES

This Service Agreement, dated as of September 1, 2006, amended as of October 1, 2006, February 1, 2008 and January 1, 2011 is entered into, by and among Duke Energy Carolinas, LLC (the "Transmission Provider"), and Customer a state Corporation ("XXXX") ("Transmission Customer") sometimes hereinafter referred to individually as "Party" and collectively as "Parties."

2.0 COMPLETED APPLICATION

The Transmission Customer has been determined to have a Completed Application for Network Integration Transmission Service under the Transmission Provider's Open Access Transmission Tariff (the "Tariff").

If the corporate identity or name of XXXX is to change during the term of this Service Agreement, XXXX shall notify Transmission Provider as soon as possible after learning of said projected change. In such event Transmission Provider may in its reasonable discretion require a new Application for Network Integration Transmission Service and/or the execution of an appropriate amendment of this Service Agreement.

3.0 TERM

Unless the Federal Energy Regulatory Commission (the "Commission") orders a different date for commencement of service, service under this Service Agreement shall commence on the later of: (1) the date the conditions precedent to receiving service set forth in Section 29.1 of the Tariff are met, or (2) September 1, 2006. Service under this Service Agreement shall continue through [DATE]. If the Service Agreement is not terminated by the Transmission Provider or the Transmission Customer, the Service Agreement will automatically renew for successive five year terms. The Service Agreement may be terminated at the end of each successive five year term by the Transmission Provider or the Transmission Customer by giving notice of such termination in writing at least one year prior to the end of the renewal period.

4.0 EFFECT OF ISO/RTO PARTICIPATION

This Service Agreement and the Network Operating Agreement, and the attachments thereto (collectively, the "Subject Agreements"), have been developed by the Parties in the context of transmission service provided pursuant to the Tariff and the Commission's open access requirements under Order No. 888 during a period of regulatory transition. The Parties acknowledge that the Transmission Provider is likely to join a Regional Transmission Organization ("RTO"), and further acknowledge that at such time as the Transmission Provider does so join an RTO transmission service shall be provided to the Transmission Customer pursuant to the rates, terms and conditions of the open access transmission tariff of the RTO ("RTO OATT"), and other terms, conditions, rules and/or protocols of the RTO. The Parties further agree that in the event of a material inconsistency or conflict between the RTO OATT or such other terms, conditions, rules

and/or protocols of the RTO and the Subject Agreements, that the Subject Agreements may require amendment to account for such changed circumstance. In such event, at the request of either Party or the RTO, the Transmission Customer and the RTO (and the Transmission Provider, if appropriate) shall enter into good faith negotiations to amend the Subject Agreements in a manner such that the transmission service is provided in accordance with the RTO OATT and such other terms, conditions, rules and/or protocols. If the Transmission Customer and the RTO (and the Transmission Provider if appropriate) cannot agree on the necessary revisions the Transmission Customer may request that the RTO (and the Transmission Provider, if appropriate) file unexecuted amended Subject Agreements with the Commission pursuant to Section 205 of the Federal Power Act such that the transmission service thereunder comports with the RTO OATT and such other terms, conditions rules and/or protocols of the RTO and the Transmission Provider shall support the Transmission Customer's right to request such filing. By agreeing to the procedure set forth above, neither Party waives any rights it might otherwise have with respect to the Subject Agreements under the Federal Power Act.

5.0 NATURE OF SERVICE TO BE FURNISHED

The Transmission Provider agrees to provide and the Transmission Customer agrees to take and pay for Network Integration Transmission Service in accordance with the provisions of Part III of the Tariff and this Service Agreement, the Attachments hereto, and the Network Operating Agreement as they may be amended from time to time. Neither Party shall be deemed, by virtue of having entered into this Service Agreement, to have agreed to diminish or enhance the rights of either Party with regard to the Commission's comparability policies, provided that the foregoing clause shall be construed in a manner most consistent with each Party performing its obligations hereunder.

6.0 NOTICES

Any notice or request made to or by either Party regarding this Service Agreement shall be made to the representative of the other Party as indicated below.

Transmission Provider:

Duke Energy Carolinas, LLC
526 South Church Street
Mailcode: EC02A
Charlotte, NC 28201-1006
Attn: Charlotte Glassman
Transmission Contracts Manager
Phone: (704) 382-3621
Fax Number: (704) 382-0850
E-Mail Address: caglassm@duke-energy.com

Transmission Customer:

[Customer]
Address
Attn:
Title:
Phone:
Fax:
E-Mail Address:
Bills for Service hereunder shall be sent to:
With copy to:

7.0 INCORPORATION OF OTHER DOCUMENTS

The Tariff, Attachment A hereto (Specifications for Network Integration Transmission Service), Attachment B hereto (Delivery Points), Attachment C hereto (Distribution Rates), Attachment D hereto (Power Factor Penalty), Attachment E hereto (Network Operating Agreement), and Attachment F hereto (Other Charges) are incorporated herein and made a part hereof.

To the extent that any provisions in the Tariff, this Service Agreement (including Attachments) or the Network Operating Agreement are ambiguous or inconsistent, any such ambiguity or inconsistency will be resolved in the following priority: the Tariff, the Service Agreement (including Attachments).

8.0 BILLINGS AND BILLING ADJUSTMENTS

8.1 The Transmission Provider will have the right to adjust or revise any bill rendered under the Tariff no later than eighteen (18) months after the date the bill was rendered. Any billing adjustment will be in writing and will state the specific basis for the adjustment. An Adjusted Bill will constitute a new bill in regard to the adjusted components for all purposes of the Tariff and this Service Agreement.

8.2 The Transmission Customer may, in good faith, challenge the correctness of any bill and any adjusted or revised bills. The Transmission Customer's challenge of any bill rendered under the Tariff may include the appropriateness of all charges thereunder. Unless otherwise agreed in writing by the Parties, the Transmission Customer's challenge must be presented no later than eighteen (18) months following the date such bill is received. Any billing challenge will be in writing and will state the specific basis for the challenge. The Transmission Provider shall respond in writing to any such billing challenge within forty-five (45) days. After such response, billing challenges shall be treated as disputes pursuant to Section 7.3 of the Tariff.

8.3 Refunds or additional charges that are a result of an adjustment, revision or billing challenge will include interest calculated at the rate set forth in 18 C.F.R. § 35.19a (a)(2)(iii).

9.0 AUDITS

9.1 In addition to the bill challenge rights set forth in Section 8.2, the Transmission Customer shall also have audit rights as set forth in this Section 9.0. The Transmission Customer shall conduct any such audit within eighteen (18) months from the date of the rendering of any bill under the Tariff. The Transmission Provider and the Transmission Customer will each have the right, upon reasonable notice, to inspect or audit each other's accounts and records supporting the bills for service under the Tariff during such calendar year. Such audit will be performed to the extent necessary to verify the correctness of any bill and the appropriateness of all charges thereunder. The audited Party shall provide or cause to be provided all information that the auditing Party may reasonably request to substantiate all billings, adjustments or revisions to billings for service under the Tariff. Any such audit will be conducted, upon reasonable written notice, during normal business hours at the offices where such accounts and records are maintained or at a location mutually agreeable to the Parties. The audited Party shall provide to the auditing Party reasonable office accommodations to conduct the audit. Those qualified personnel identified upon reasonable written notice by the auditing Party will be permitted to conduct audits. The audited Party will be entitled to review the audit report and any supporting materials at the conclusion of the audit and prior to finalization. The accounts and records for any particular billing period shall not be subject to more than one (1) audit by each Party.

9.2 Notwithstanding the above, if the Transmission Provider renders a billing adjustment or revision and the audit for the affected calendar year has been conducted, then the Transmission Customer may conduct an audit of the billing adjustment or revision within ninety (90) days after the adjustment is rendered and challenge such adjustment no later than one-hundred and fifty (150) days after the adjustment is rendered.

9.3 With the exception of quantifiable changes in the amounts of the billings, the audit report, supporting materials, and all other audit results of all such audits shall be kept confidential by the Parties and shall not be released to any other party without the express written consent of the other Party except that in the event that a matter subject to audit becomes the subject of dispute resolution or litigation in any forum with jurisdiction, a Party may disclose to the decision maker the audit report, supporting materials, other audit results of all such audits, and any related information, provided that the other Party is afforded notice and an opportunity to request that such information be protected against disclosure to third parties.

10.0 DELIVERY POINTS

The Transmission Customer Delivery Points shall be the points of connection between the Transmission Provider's facilities and the facilities of the Transmission Customer or its member systems.

11.0 ADJUSTMENT FOR LOSSES

To the extent any Delivery Point is at a voltage level less than 44 kV or the metering point(s) is (are) remote from the Delivery Point, the load associated with such Delivery Point used for the calculation of the Network Integration Transmission Service charge shall be adjusted for the losses associated with: (i) the Transmission Provider's applicable distribution facilities losses; and/or (ii) the Transmission Customer's distribution and transmission facilities, as applicable. Such loss compensation factors shall be as mutually agreed upon by the Parties. To the extent the Parties cannot agree on any such factors, the Dispute Resolution Procedures in Section 12 of the Tariff may be invoked to resolve the disagreement.

12.0 NO WAIVERS

Failure of a Party to enforce any provision of this Service Agreement will not be construed as a waiver of such provision, and will not affect the validity of the Service Agreement or the right of either Party subsequently to enforce any provision of the Service Agreement. Any waiver at any time by either Party of its rights with respect to the other Party or with respect to any matter arising in connection with this Service Agreement will not be considered a waiver with respect to any subsequent matter. Failure of a Party to resort to any legal remedy or to exercise any one or more alternative remedies will not affect such Party's right subsequently to resort to any one or more of such rights or remedies on account of any such grounds then existing or which may subsequently occur.

13.0 RUS APPROVAL

This Service Agreement and any subsequent amendment(s) are subject to the approval of the Administrator of the Rural Utilities Service ("RUS"). The Transmission Customer will be responsible for obtaining approval of this Service Agreement from the RUS and will seek to obtain such approval promptly. If the RUS fails to approve either in whole or in part this Service Agreement or any subsequent amendments as submitted, the Parties will undertake to renegotiate this Service Agreement or said amendments, as appropriate, to restore this Service Agreement as near as possible to its original intent and effect, provided that by virtue of such renegotiation no party shall be obligated to agree to the insertion of, deletion of or modification of any specific provisions of this Service Agreement.

14.0 ACCEPTANCE BY FERC

The Parties recognize that this Service Agreement and its Attachments must be filed with the Federal Energy Regulatory Commission and is subject to the jurisdiction of that Commission. This Service Agreement is conditioned expressly on acceptance by the Commission of this Service Agreement and its Attachments without changes or conditions unacceptable to either Party. The Parties agree that in the event that any of the terms and conditions of this Service Agreement and its Attachments are finally held or determined to be invalid, illegal or void, or to be in contravention of any applicable laws, rules, regulations or public policy, all other terms and conditions of this Service Agreement and its Attachments shall remain in full force and effect unless the terms and conditions so found to be invalid, illegal or void are not reasonably separable from the

remaining terms and conditions of this Service Agreement and its Attachments. The Parties further agree that if, upon the initial filing of this Service Agreement and its Attachments with the Commission or at any time thereafter, the Commission or a court of competent jurisdiction issues an Order that (i) amends, modifies or conditions this Service Agreement and its Attachments in a way that materially changes the obligations or benefits to either Party, or (ii) finds on a final basis any provision of this Service Agreement and its Attachments to be invalid, illegal or void, the Parties shall review such Order to determine whether such amendments, modification, conditions or findings are acceptable. Within twenty-one (21) calendar days following such Order, the Parties shall notify each other in writing of their acceptance or rejection of the Service Agreement and its Attachments based upon any amendments, modifications, conditions or findings so ordered. A failure by a Party to provide notification within such twenty-one (21) day period shall be deemed acceptance. If either Party provides notification of its rejection or such Order requires adjustment of this Service Agreement and its Attachments, the Parties shall enter into re-negotiation of this Service Agreement and its Attachments within 60 calendar days either after the notification or the Order for the purposes of restoring as nearly as possible the obligations and benefits of each Party as originally bargained for and conforming this Service Agreement and its Attachments with the requirements of such Order. If no agreement is reached by the Parties on the terms and conditions of a reformulated Service Agreement and Attachments within sixty (60) calendar days after the initiation of such re-negotiation, the Parties agree that the Transmission Provider shall file a proposed unexecuted Service Agreement and Attachments with the Commission no later than ninety (90) calendar days after the initiation of such re-negotiation.

IN WITNESS WHEREOF, the Parties have caused this Service Agreement to be executed by their respective authorized officials.

Transmission Provider:

Duke Energy Carolinas, LCC (Transmission)

Signature:_____

By: Jim L Stanley	Sr. Vice President, Power Delivery	_____
Name	Title	Date

Transmission Customer

Customer

Signature:_____

By: _____	_____	_____
Name	Title	Date

Attachment A
Specifications For
Network Integration Transmission Service

1.0 Term of Network Service:

As specified in Section 3.0 of the Service Agreement for Network Integration Transmission Service.

2.0 Description of Capacity and/or Energy to be Transmitted by Transmission Provider Across the Transmission Provider's Transmission System (including electric control area in which the transaction originates):

Firm capacity and energy delivered to the Transmission Provider's Transmission System in the amount of (i) the sum of hourly metered load(s) at the metering location, compensated, where applicable, for losses on (a) the Transmission Customer's facilities to the extent the metering is remote from the delivery point and (b) the Transmission Provider's distribution facilities to the extent such delivery point is served from such facilities, plus (ii) real power losses on the Transmission Provider's Transmission System as set forth in Section 28.5 of the Tariff. The listing of the Transmission Customer's Delivery Points, as may be amended from time to time, is set forth in Attachment B to the Service Agreement. Detailed information about each of the Transmission Customer's Delivery Points shall be set forth in Delivery Point Data Sheets, executed by the Parties, substantially in the form set forth in Attachment B to the Service Agreement.

3.0 Resources:

Note: Changes or additions to Network Resources to serve Transmission Customer load growth shall be treated as a "Designation of New Network Resources" pursuant to Section 30.2 of the Transmission Provider's Tariff.

3.1 Transmission Customer Contracted Generation:

3.2 Designated Network Resource

Control Area in Which Resource is Located:
Designated Interface(s): N/A

4.0 Network Load:

The Network Load is the demand and energy requirements of Transmission Customer's x number of Delivery Points connected or anticipated to be connected to the Transmission Provider's transmission and distribution system.

5.0 Designation of Party Subject to Reciprocal Service Obligation:

The Transmission Customer

6.0 Service Under This Agreement May be Subject to Some Combination of the Charges Detailed Below:

The appropriate charges for individual transactions will be determined in accordance with the terms and conditions of the Tariff.

6.1 Transmission Charge:

As per the Tariff, Part III Section 34.

6.2 Facilities Study Charge:

Not Applicable

6.3 Direct Assignment Facilities Charge:

As per the Tariff and Commission's approval of directly assignable charges.

6.4 Ancillary Services Charge:

Schedule 1, Scheduling, System Control and Dispatch Service:
The charges for **Scheduling, System Control and Dispatch Service** are as provided per the Tariff, Schedule 1.

Schedule 2, Reactive Supply and Voltage Control from Generation Source Service**:** The charges for **Reactive Supply and Voltage Control from Generation Sources Service** are provided per the Tariff, Schedule 2.

Schedule 3, Regulation and Frequency Response Service: The charges for **Regulation and Frequency Response Service** are provided per the Tariff, Schedule 3.

Schedule 4, Energy Imbalance Service: The Transmission Customer must either purchase **Energy Imbalance Service** from the Transmission Provider or make alternative comparable arrangements to satisfy its Energy Imbalance Service obligations. The charges for this service are as provided per the Tariff, Schedule 4.

Schedule 5, Operating Reserve - Spinning Reserve Service: The Transmission Customer must either purchase **Operating Reserve - Spinning Reserve Service** from the Transmission Provider or make alternative comparable arrangements to satisfy its Operating Reserve - Spinning Reserve Service obligations. The charges for this service are as provided per the Tariff, Schedule 5.

Schedule 6, Operating Reserve - Supplemental Reserve Service: The Transmission Customer must either purchase **Operating Reserve - Supplemental Reserve Service** from the Transmission Provider or make alternative comparable arrangements to satisfy its Operating Reserve - Supplemental Reserve Service obligations. The charges for this service are as provided per the Tariff, Schedule 6.

6.5 Loss Compensation Service:

The Transmission Customer may elect to (1) supply the capacity and/or energy necessary to compensate the Transmission Provider for losses which occur across transmission facilities, (2) receive an amount of electricity at delivery points that is reduced by the amount of losses incurred by the Transmission Provider, or (3) with the concurrence of the Transmission Provider, have the Transmission Provider supply the capacity and/or energy necessary to compensate for such losses. To the extent the service is provided by the Transmission Provider, the charges for this service are as provided per the Tariff, Schedule 9.

6.6 Gross Receipts Tax:

The Transmission Customer has satisfied the Transmission Provider's requirement, if any, to provide documentation that the Transmission Customer's customers pay gross receipts taxes. The Transmission Provider will provide credits as appropriate.

6.7 Redispatch Charges:

As per the Tariff, Part III Section 34.4.

6.8 Distribution Rates:

As provided per the Tariff, Part III Section 34.6 and Attachment C-1.

6.9 Penalties for Non-Compliance with the Transmission Provider's Power Factor Standards:

As stated in Attachment D.

Attachment B

Delivery Points

Delivery Locations:

XXXX DELIVERY POINTS	**DELIVERY PT NAME**

Duke Energy Carolinas, LLC
Delivery Point Data Sheet

Transmission Customer Name: _____

Member Name: _____

Delivery Point Name Number: _____

Delivery Identifier: _____ _____
Duke Energy Carolinas, LLC ***Transmission Customer***

Joint Use Substation: _____

Delivery Point Location Description:

Planned Demand: _____ ***kW (Summer)*** _____ ***kW (Winter)***

Transmission Voltage: _____ ***kV*** ***Delivery Voltage:*** _____ ***kV***

Metered Voltage: _____ ***kV***

Meter Location: _____

Meter Location Description: _____

Meter Ownership: _____

Metering Compensation Description: _____

Power Factor Grouping Number: _____

Delivery Station Facilities:
Cost Basis: _____ ***Classification:*** _____

Interruptible Load: _____ ***kW***

Special Facilities: / Arrangements: _____

Effective Date: _____

By: _____
Transmission Customer ***Date***

By: _____
Duke Energy Carolinas, LLC ***Date***

Attachment C
Distribution Rates

$$\begin{matrix}\textit{Distribution Rates for}\\ \textit{TX Customer Delivery Points}\end{matrix} = \begin{pmatrix}\textit{Original Cost}\\ \textit{of Delivery Station}\end{pmatrix} \times \begin{pmatrix}\textit{\% Assigned To}\\ \textit{TX Customer}\end{pmatrix} \times (1.22\%\ \textit{per mo})$$

Original Cost of Delivery Station

For all assets in service as of September 30, 2000, the Original Cost of the Delivery Station shall be the values specified in this attachment. The Original Cost of all additional assets shall be the asset cost as assigned to FERC accounts 360 through 369 (or their successors). Retired assets will reduce the 'Original Cost of Delivery Station' by the values of the retired assets which were included in the 'Original Cost of Delivery Station'.

Percentage Assigned to Transmission Customer

This factor will apply to delivery stations only where the Transmission Customer is not the sole user. (For stations having the Transmission Customer as the sole user the value assigned to the factor will be one (1).)

For delivery stations in service on September 30, 2000, to which no new assets have been added, the factor is determined by the Percentage Use of Station Capability ("Percentage of Capability Method"). The Percentage Use of Station Capability formula is as follows:

The higher of

$$\begin{matrix}\textit{Percentage Use Of}\\ \textit{Station Capability}\end{matrix} = \frac{\begin{matrix}\textit{TX Customer}\\ \textit{Contract kVA}\end{matrix}}{\textit{Delivery Station kVA}}$$

where

$$\textit{TX Customer Contract kVA} = \frac{\textit{Contract kW}_1}{\textit{\% Power Factor}(\textit{Maximum Non} - \textit{coincident 12 Mo. Peak}_2)}$$

or

$$\begin{matrix}\textit{Percentage Use Of}\\ \textit{Station Capability}\end{matrix} = \frac{\begin{matrix}\textit{TX Customer kW Peak}\\ \textit{60 Minute Integrated Clock Hour Demand}\end{matrix}}{\textit{Delivery Station kW}}$$

where

$$Delivery\,Station\,\text{kW} = (Delivery\,Station\,\text{kVA}) \times$$
$$(\%Power\ Factor\,(Maximum\,Non-coincident 12\ Mo.Peak_{1}))$$

For new Delivery Stations placed in service after September 30, 2000, and for Delivery Stations where new assets have been added,[2] the factor is determined by Percentage of Station Use ("Percentage of Station Use Method") as follows:

$$Percentage\ of\ Station\,Use = \frac{TX\ Customer\ Integrated\ 60\ Minute\ kW\ Demand\ at\ Hour\ of\ Delivery\,Station\,Peak}{Delivery\ Station\ Integrated\ 60\ Minute\ kW\ Demand\ at\ Hour\ of\ Delivery\,Station\,Peak}$$

The hour of the Delivery Station Peak is the hour of maximum delivery station integrated 60 minute demand for the current month and previous 11 months. Temporary load shifts and other unusual circumstances will be excluded from the Delivery Station Peak calculation. If metering is not in place to determine the hour of the delivery station peak, the Percentage of Capability Method shall be used.

A Delivery Station may be terminated by either the Transmission Provider or the Transmission Customer upon reasonable notice. The initiator of the termination shall be responsible for paying any loss due to early retirement incurred by the other Party involving assets covered by these distribution rates.

These distribution rates do **NOT** include the costs for metering and metering equipment.

Transmission Provider will provide advance notice to Transmission Customer about changes to customer-specific facilities that will increase Transmission Customer's costs through a direct assignment charge.

---

1 Contract kW is equivalent to the term *Planned Demand* located on the 'Delivery Point Data Sheet'.

2 The definition of a new asset will be limited to
   a. the addition or replacement of transformers, capacitors, isolating devices and instrument transformers (non-meter application), or
   b. a cumulative increase in the original cost of a delivery point to 125% of its initial value.

1. LOSS DUE TO EARLY RETIREMENT: Loss due to early retirement shall consist of replacement costs less accumulated depreciation, less salvage plus cost of removal, and in the case of Transmission Customer, when the loss due to early retirement is occasioned by Transmission Provider initiating the termination, reintegration costs shall be added.

2. REPLACEMENT COST: Replacement Cost shall be the cost of the identical item at the time of the sale, the time of replacement, or retirement, as the case may be, or where such identical item is no longer available, the closest comparable item shall be used to determine the cost.

3. DEPRECIATION: Depreciation shall be calculated at the annual rate of and in the manner of Transmission Provider's then current rate and method as set forth in Transmission Provider's FERC Form 1, page 430, entitled "Depreciation and Amortization of Electric Plant" and shall be applied to Replacement Cost. Accumulated Depreciation is the Annual Depreciation so calculated times the number of years from the date of installation to the date on which the calculation is made. Depreciation shall be limited to a maximum of 75% of Replacement Cost.

4. SALVAGE: Salvage shall consist of reusable and non-reusable items of equipment. Where an item of equipment is reusable, the value of such item shall be determined by Replacement Cost less Accumulated Depreciation. Where an item is non-reusable its value shall be equal to the proceeds received by Transmission Provider from its sale as scrap. The total of the value of reusable and nonreusable items shall be credited in calculating the loss due to early retirement.

5. COST OF REMOVAL: Cost of removal shall include direct labor plus a percentage for regular employee fringe benefits and a percentage for engineering and supervision, cost of use of equipment and miscellaneous expenses. The charges for cost of removal will be calculated consistent with regular charges made to others for similar work at that time.

6. REINTEGRATION COSTS: Reintegration costs shall include direct labor plus a reasonable percentage for regular employee fringe benefits and a reasonable percentage for engineering and supervision, cost of use of equipment, cost of materials, and miscellaneous expenses and are limited to those costs required to allow Transmission Customer to connect the new Delivery Point with its lines, by the most practical and direct route, which were previously connected with the terminated Delivery Point. The charges for the costs of reintegration will be calculated consistent with the standard methodology being used by the Participant at that time.

Delivery Locations	Original Cost ($)

Attachment D
Power Factor Penalty

1.0 Power Factor Compliance Requirements per Delivery Point

Beginning with the billing period which follows the later of: i) September 1, 2006, or ii) the month in which Duke complies with the requirements set forth in the Transmission Provider's Facility Connection Requirements ("FCR"), the Transmission Customer must meet the power factor requirements set forth in the FCR or pay penalties specified in Section 2.0 herein.

The Transmission Provider will provide power factor information for each Duke Electric Distribution substations to demonstrate compliance with the power factor standards set forth in Attachment F of the NITSA. If the Transmission Provider's Electric Distribution substations are not in compliance with the power factor standards set forth in Attachment F of the NITSA, the Transmission Customer will not be subject to these power factor penalties until such time as the Transmission Provider has demonstrated that the Transmission Provider's Electric Distribution substations are in compliance with the power factor standards.

Power Factor Groups are defined in Attachment F of the NITSA.

2.0 Penalty Formula

The penalties for failure to meet the power factor requirements are provided:

Power Factor Groups consisting of 1 Delivery Point:

Peak Period Penalty = {Delivery Point kVar Demand at Peak – (Delivery Point kW Demand at Peak X 0.2718)} X 0.75/kVar

Valley Period Penalty = Delivery Point Leading kVar Demand at Valley X $0.75/kVar

Power Factor Groups consisting of 2 or more Delivery Points:

Peak Period Penalty:

Scenario 1: The aggregate power factor of the group is less than 96.5% lagging at the hour of monthly transmission system peak. The following penalty will be assessed.

Peak Period Group Penalty = {Delivery Group kVar Demand at Peak – (Delivery Group kW Demand at Peak X 0.2718)} X 0.75/kVar

Scenario 2: The aggregate power factor of the group meets the power factor requirement at the hour of monthly transmission system peak but one or more

delivery points in the group are operated at a power factor outside the 92 % lagging to 92 % leading range. Each delivery point with a power factor outside the desired power factor range will be assessed the following penalty.

Peak Period Penalty Per Delivery = {Delivery Point kVar Demand at Peak– (Delivery Point kW Demand at Peak X 0.2718)} X 0.75/kVar

Scenario 3: The aggregate power factor of the group is less than 96.5% lagging at the hour of monthly transmission system peak and one or more delivery points in the group are operated at a power factor outside the 92 % lagging to 92 % leading range. The following penalty for the group and for each delivery will be assessed.

Peak Period Group Penalty = {Delivery Group kVar Demand at Peak– (Delivery Group kW Demand at Peak X 0.2718)} X 0.75/kVar

Peak Period Penalty Per Delivery = {Delivery Point kVar Demand at Peak– (Delivery Point kW Demand at Peak X 0.2718)} X 0.75/kVar

Total Peak Period Penalty = Peak Period Group Penalty + $\sum_{i=1}^{n}$ Peak Period Penalty Per Delivery

Where *n* is the total number of delivery points in the group in violation of the power factor requirements.

Valley Period Penalty:

Scenario 1: The aggregate power factor of the group is leading at the hour of monthly transmission system valley. The following penalty will be assessed.

Valley Period Group Penalty = Delivery Group Leading kVar Demand at Valley X $0.75/kVar

Scenario 2: The aggregate power factor of the group meets the power factor requirement at the hour of monthly transmission system valley but one or more delivery points in the group are operated at a power factor outside the 92 % lagging to 92 % leading range. Each delivery point with a power factor outside the desired power factor range will be assessed the following penalty.

Valley Period Penalty Per Delivery = Delivery Point Leading kVar Demand at Valley X $0.75/kVar

Scenario 3: The aggregate power factor of the group is leading at the hour of monthly transmission system valley and one or more delivery points in the group are operated at a power factor outside the 92 % lagging to 92 % leading range. The following penalty for the group and for each delivery will be assessed.

Valley Period Group Penalty = Delivery Group Leading kVar Demand at Valley X $0.75/kVar

Valley Period Penalty Per Delivery = Delivery Point Leading kVar Demand at Valley X $0.75/kVar

Total Valley Period Penalty = Valley Period Group Penalty + $\sum_{i=1}^{n}$ Valley Period Penalty Per Delivery$_i$

Where *n* is the total number of delivery points in the group in violation of the power factor requirements.

3.0 Terms

Delivery Point kW Demand at Peak - The kW demand at the Delivery Point registered at the hour of the Transmission Provider's Monthly Transmission System Peak

Delivery Group kW Demand at Peak - The sum of kW demand registered at the hour of the Transmission Provider's Monthly Transmission System Peak at each Delivery Point in the Delivery Point Group

Delivery Point kVar Demand at Peak[1] - The kVar demand at the Delivery Point registered at the hour of the Transmission Provider's Monthly Transmission System Peak

Delivery Group kVar Demand at Peak[1] - The sum of kVar demand registered at the hour of the Transmission Provider's Monthly Transmission System Peak at each Delivery Point in the Delivery Point Group.

Delivery Point Leading kVar Demand at Valley[1] - The leading kVar demand at the Delivery Point registered at the hour of the Transmission Provider's Monthly Transmission System valley

Delivery Group Leading kVar Demand at Valley[1] - The sum of kVar demand registered at the hour of the Transmission Provider's Monthly Transmission System valley at each Delivery Point in the Delivery Point Group.

4.0 Duke Capacitors in Delivery Stations

The Delivery Point kVar Demand at Peak, Delivery Group kVar Demand at Peak, the Delivery Point Leading kVar Demand at Valley, and the Delivery Group Leading kVar Demand at Valley will account for the presence of capacitors (if any) owned by Duke at the distribution delivery station. To prevent penalizing the Transmission Customer for the Duke's operation of its capacitors, the Duke capacitors will be considered operational

---

[1] As adjusted in accordance with Section 4.0.

during the day and hour of the monthly transmission system peak regardless of the actual operating status of the Duke capacitors. Likewise, the Duke capacitors will be considered not operational during the day and hour of the monthly transmission system valley regardless of the actual operating status of the Duke capacitors.

5.0 Temporary Waiver of Power Factor Requirements for New Delivery Points

The Transmission Customer may request a 24-month partial waiver of the Peak Period Power Factor requirements for new delivery points. This waiver would be to allow the transmission customer adequate time to develop a new distribution voltage profile for the new delivery point and to perform the associated feeder work. The form of the partial waiver would be as follows:

1. For the first 12-month period following the in-service date of the new delivery, the Peak Period Power Factor requirements for that delivery will be:

Peak Periods - The Transmission Customer must operate its electrical system in a manner resulting in a power factor not less than 90% lagging as measured at the delivery point at the hour of transmission system peak on a monthly basis for the months of June, July, August, and September. A lagging power factor of less than 90% lagging as measured at the delivery point at the hour of transmission system peak for the specified months will result in a penalty. The penalty will be calculated using the following formula:

Peak Period Penalty = {Delivery Point kVar Demand at Peak– (Delivery Point kW Demand at Peak X 0.4843)} X 0.75/kVar

2. For the second 12-month period following the in-service date of the new delivery, the Peak Period Power Factor requirements for that delivery will be:

Peak Periods - The Transmission Customer must operate its electrical system in a manner resulting in a power factor not less than 94% lagging as measured at the delivery point at the hour of transmission system peak on a monthly basis for the months of June, July, August, and September. A lagging power factor of less than 94% lagging as measured at the delivery point at the hour of transmission system peak for the specified months will result in a penalty. The penalty will be calculated using the following formula:

Peak Period Penalty = {Delivery Point kVar Demand at Peak– (Delivery Point kW Demand at Peak X 0.3629)} X 0.75/kVar

3. The new delivery point can not be included in a power factor group for the duration of a temporary waiver.

6.0 Waiver of Valley Power Factor Requirements for Delivery Points serving Underground Distribution Systems

The Transmission Customer may request a waiver from the Valley Period Power Factor requirement for any delivery point dedicated to serving an underground distribution system. Duke recognizes that such systems may be capacitive in nature at minimum

loads and may present a leading power factor at the delivery point. In requesting this waiver, the Transmission Customer must demonstrate that the delivery point is capacitive in nature at minimum loads and that no capacitors are in-service at such times. If the delivery point receives a waiver it cannot be included in a power factor group.

Attachment E
Network Operating Agreement

1.0 Control Area Requirements

The Transmission Customer shall: (i) operate as a Control Area under applicable guidelines of the North American Electric Reliability Council ("NERC"), Southeastern Electric Reliability Council ("SERC"), and Virginia-Carolinas Reliability Group ("VACAR") or any of their successors; (ii) satisfy its Control Area requirements, including all necessary Ancillary Services, by contracting with the Transmission Provider; or (iii) satisfy its Control Area requirements, including all necessary Ancillary Services, by contracting with other entities, consistent with Good Utility Practice, which satisfies NERC, SERC and VACAR requirements. The Transmission Customer shall plan, construct, operate and maintain its facilities and system in accordance with Good Utility Practice, which shall include, but not be limited to, all applicable guidelines of NERC, SERC and VACAR, as they may be modified from time to time, and any generally accepted practices in the region.

2.0 Network Operating Committee

(a) The Transmission Provider and the Transmission Customer shall each appoint a member and an alternate to a Network Operating Committee, and so notify the other Party of such appointment in writing. Such appointments may be changed at any time by similar notice. Each member and alternate shall be a responsible person working with the day to day operations of their respective systems. The Network Operating Committee shall meet as necessary to carry out the duties set forth herein. The Network Operating Committee shall also represent the Parties in all other operational matters not identified below that may be delegated to it by mutual agreement of the Parties. The Network Operating Committee shall hold meetings at the request of either Party, at a time and place agreed upon by the members of the Network Operating Committee.

(b) The Network Operating Committee shall coordinate operating criteria for the Parties' respective responsibilities under the Tariff, NITSA, and NOA including: (i) operate and maintain equipment necessary for integrating the Transmission Customer system within the Transmission Provider's Transmission System (including, but not limited to, remote terminal units, metering, communications equipment and relaying equipment); (ii) transferring data, as necessary and as applicable, between the Transmission Provider and the Transmission Customer (including, but not limited to, heat rates and operational characteristics of Network Resources, generation schedules for units outside the Transmission Provider's Transmission System, interchange schedules, unit outputs for redispatch required under Section 33 of the Tariff, voltage schedules, loss factors, and other real time data); (iii) using software programs required for data links and constraint dispatching; (iv) exchanging data on forecasted loads and resources necessary for long-term planning; (v) addressing any other technical and operational considerations required for implementation of Part III of the Tariff, including scheduling protocols; and (vi) developing and implementing communications protocols and procedures for the exchange of scheduling information. The Network Operating Committee shall have no

power to amend or alter the provisions of this NOA or the NITSA. The Network Operating Committee shall use the standards set forth in the Transmission Provider's FCR document, as may be amended from time to time. The Network Operating Committee shall establish procedures: (i) to establish and verify initial and continuous compliance with the FCR, including the implementation of revised FCR provisions; and (ii) to correct failures to comply in a timely manner**.**

3.0 Network Operating Committee Agreements

(a) Each Party shall cooperate in providing to the Network Operating Committee all information required in the performance of the Network Operating Committee's duties. All decisions and agreements, if any, made by the Network Operating Committee shall be evidenced in writing and approved by each member of the Operating Committee, and shall be in accordance with the Tariff, the NITSA, and the NOA.

(b) Disputes within the Network Operating Committee shall be resolved in accordance with the Dispute Resolution Procedures in the Tariff.

4.0 Redispatch Procedures

(a) The Transmission Provider may implement redispatch procedures in accordance with Section 33.2 of the Tariff. If the Transmission Provider has redispatch procedures that have been accepted for filing and permitted to go into effect by the Federal Energy Regulatory Commission ("FERC" or the "Commission"), those procedures will be adhered to by the Transmission Provider and the Transmission Customer in any instance in which redispatch is implemented. Until such time as the FERC has permitted the Transmission Provider's redispatch procedures to go into effect, redispatch will require mutual consent by both the Transmission Provider and the Transmission Customer. The Transmission Customer shall respond immediately to requests for redispatch from the Transmission Provider's system operator.

(b) The Transmission Customer will submit to the Transmission Provider verifiable cost data for its Network Resources, which estimates the cost to the Transmission Customer of changing the generation output of each of its Network Resources. This cost data will be used, along with similar data for the Transmission Provider's resources, as the basis for least-cost redispatch. The Transmission Provider's operations personnel will keep this data confidential, and will disclose it only to those who require the information in order to carry out the redispatch function. Under no circumstances shall the Transmission Provider disclose this data to the Transmission Provider's Bulk Power Marketing function or any other marketer. If the Transmission Customer experiences changes to its costs, the Transmission Customer will submit those changes to the Transmission Provider's system operator.

(c) The Transmission Customer may audit, at its own expense, redispatch events (such as the cause or necessity of the redispatch) during normal business hours following reasonable notice to the Transmission Provider. Either the Transmission Customer or the Transmission Provider may request an audit of the other Party's cost data. Any audit of

cost data will be performed by an independent agent at the requesting Party's cost. Such independent agent will be required to keep all cost data confidential.

(d) Once redispatch has been implemented, the Transmission Provider will book in a separate account the redispatch costs incurred by the Transmission Provider and the Transmission Customer based on the submitted cost data. The Transmission Provider and all Transmission Customers will each bear a proportional share of the total redispatch costs based on their then current Load Ratio Shares. The redispatch charge or credit, as appropriate, will be reflected on the Transmission Customer's monthly bill.

5.0 Metering

(a) The Transmission Customer will be responsible for the purchase, installation, operation, maintenance, repair, and replacement of all metering equipment, with the exception of metering associated with NCEMC's ownership share of the Catawba Nuclear Station, including communication equipment and paths, necessary to provide Network Integration Transmission Service, except as otherwise set forth in this NOA. All metering equipment of the Transmission Customer shall conform to Good Utility Practice and the standards and practices of the Transmission Provider's Control Area where necessary for implementation of Network Integration Transmission Service. Prior to its installation, the Transmission Provider and the Transmission Customer shall review the metering equipment to ensure conformance with such standards or practices as applicable. The Transmission Customer may, by mutual agreement of the Parties, lease or purchase metering equipment of the Transmission Provider for all or part of this obligation.

(b) Electric capacity and energy received by the Transmission Provider directly from the Transmission Customer's Network Resources will be measured by meters installed at the Transmission Customer's Network Resources. Electric capacity and energy which are wheeled for the Transmission Customer by a neighboring system will be received at designated Points of Receipt between such neighboring system and the Transmission Provider's Control Area. When measurement is made at any location other than a Point of Receipt, suitable adjustment for losses between the point of measurement and the Point of Receipt will be agreed upon in writing between the Parties hereto and will be applied to all measurements so made. Metered receipts used in billing and accounting hereunder will in all cases include adjustments for such losses.

(c) Electric capacity and energy delivered to the Transmission Customer's Network Loads by the Transmission Provider will be measured by meters installed at the Delivery Points to such Network Loads. Meters may be placed at locations other than Delivery Points by mutual agreement of the Parties. When measurement is made at any location other than a Delivery Point, suitable adjustment for losses between the point of measurement and the Delivery Point will be agreed upon in writing between the Parties hereto and will be applied to all measurements so made. Metered receipts used in billing and accounting hereunder will in all cases include adjustments for such losses. In addition, the Transmission Customer will provide written confirmation of its commitment not to tap an owned transmission line before a new metered delivery is put in service without sixty

(60) days' advance notification to the Transmission Provider. Further, the Transmission Customer will allow the Transmission Provider access to its facilities for inspection of the transmission line upon the Transmission Provider's reasonable notice.

(d) Meters at the Transmission Customer's Network Resources, where applicable, and Network Loads will be tested at least biennially. Representatives of the non-owning Party will be provided notification of and afforded an opportunity to witness such tests.

(e) The owning Party will, upon request of the non-owning Party, test any meter at the Network Resources or Network Load used for determining the receipt or delivery of electric capacity and energy by the Transmission Provider. In the event the test shows the meter to be inaccurate, the owning Party will make any necessary adjustments, repairs, or replacements. In the event the test shows the meter to be accurate, all costs of the test will be paid by the non-owning Party.

(f) In the event any meter used to measure capacity and energy fails to register or is found to be inaccurate, appropriate billing adjustments, based on the best information available, will be agreed upon by the Parties hereto. Meters shall be calibrated to 0.5% accuracy at unity power factor for both full load and light load. These meters shall be calibrated to 1.0% accuracy for 0.5 power factor at full load. Metering accuracy limits are stated in the following table.

METER ACCURACY LIMITS			
Watt-hour Function			**Var-hour Function**
Full Load	Power Factor	Light Load	Power Factor
+/- 0.5	+/- 1.0	+/- 0.5	+/- 1.0

Notes:

- Watt-hour and var-hour functions should be tested in both directions of energy flow (In and Out).
- When compensating for transformer or line loss, utilize stated limits above or 5% of desired compensation, whichever is greater.
- The meter shall be tested with compensation applied to obtain a true test of the installation.

Test Points	***Volts***	***Amps***	***Power Factor***
Full Load	120	5	1.0
Power Factor	120	5	0.5
Light Load	120	0.5	1.0

These values will be considered to be correct and accurate insofar as correction of billing is concerned. If, as a result of any test, a meter is found to be out of compliance with these values, then the record of readings of such meter previously taken will be corrected according to the percentage of any inaccuracy so found, but no correction will extend beyond ninety (90) days prior to the day on which inaccuracy is discovered by such test.

(g) The Transmission Provider will have the right to install, at its own expense, suitable metering equipment at any Point(s) of Receipt or Delivery, as herein provided for the purpose of checking any meters installed by the Transmission Customer.

(h) The Transmission Customer will provide the metering as described in Section 7.0(a). The Transmission Customer and the Transmission Provider (collectively "Metering Parties") will have electronic access to the meters for the purpose of collecting and processing meter data for billing as defined in the Catawba Interconnection Agreement, FERC Electric Rate Schedule No. 273 ("IA") and the Tariff. The Metering Parties will also have electronic access to the meters for the purpose of verifying the accuracy of the metered data and meter configuration. If physical access to metering equipment located on premises owned or controlled by a Metering Party is needed, the owning Metering Party will furnish the non-owning Metering Party's representative with physical access to the meters upon reasonable prior request for the purpose of: (i) collecting and processing meter data for billing under the IA and Tariff; and /or (ii) verifying the accuracy of the metered data and meter configuration. The owning Metering Party shall have the right to have an observer present during such activities by the non-owning Metering Party's representatives.

(i) The Metering Party that owns a meter will provide any equipment nameplate and configuration information requested by the non-owning Metering Party to allow the non-owning Metering Party to verify that the meter measurement and loss compensation calculation, if applicable, is accurate. The owning Metering Party shall notify the non-owning Metering Party at least thirty (30) days in advance of any changes to the metering, meter programming, or meter equipment. In the event that changes are made in response to equipment failure, notification will be made within two (2) business days after the failure is discovered.

6.0 Control Area and Data Equipment

(a) The Transmission Customer will be responsible for the purchase, installation, operation, maintenance, repair, and replacement of all data acquisition equipment, metering equipment, protection equipment, and any other associated equipment and software, which may be required for the Transmission Customer to operate in accordance with Section 3.0 of this NOA. Such equipment shall conform to Good Utility Practice and conform to the reasonable standards and practices of the Transmission Provider's Control Area. Prior to its installation, the Transmission Provider and the Transmission Customer shall review the equipment and software required by this Section to ensure conformance with such standards or practices.

(b) The real time telemetry and data to be received by the Transmission Provider's system operator and the Transmission Customer shall be determined initially by the Parties. Subsequent changes shall be determined by the Network Operating Committee. Such telemetry and data shall be necessary for monitoring of system operations for reliability, security, or economics. This telemetry includes, but is not limited to, loads, line flows, voltages, generator output, and breaker status at any of the Transmission Customer's transmission facilities. To the extent telemetry is required that is not available, the

Transmission Customer shall, at its own expense, install any metering equipment, data acquisition equipment, or other equipment and software necessary for the telemetry to be received by the Transmission Provider's system operator.

(c) Each Party shall be responsible for implementing any computer modifications or changes required to its own computer system(s) as necessary to implement this Section.

7.0 Operating Requirements

(a) The Transmission Customer shall operate its generating resources in a manner consistent with that of the Transmission Provider, following voltage schedules, utilizing free governor response, meeting power factor requirements at the point of interconnection with the Transmission Provider's system, and other such criteria required by NERC, SERC, or VACAR, or any of their successors, and consistently adhered to by the Transmission Provider.

(b) Insofar as practicable, the Transmission Provider and the Transmission Customer shall protect, operate, and maintain their respective systems so as to avoid or minimize the likelihood of disturbances which might cause impairment of service on the system(s) of the other. The Parties, consistent with Good Utility Practice, shall implement load shedding programs to maintain the reliability and integrity of the Transmission System, as provided in Section 33.6 of the Tariff. Load shedding shall include: (i) automatic load shedding by underfrequency device; and (ii) manual load shedding. The Transmission Provider will implement load shedding to maintain the relative sizes of load served, unless otherwise required by circumstances beyond the control of the Transmission Provider or the Transmission Customer. Automatic load shedding devices will operate without notice. When manual load shedding is relied upon, the Transmission Provider shall notify the Transmission Customer's dispatchers or schedulers of the required action and the Transmission Customer shall take immediate steps to comply.

(c) The Transmission Customer shall, at its own expense, provide, operate, and maintain in service high-speed, underfrequency load shedding equipment. The Transmission Customer will install underfrequency devices consistent with NERC, SERC, and VACAR, or any of their successors requirements, to disconnect automatically approximately thirty percent (30%) of its Network Load in a manner consistent with that followed by the Transmission Provider, which is three (3) steps of approximately ten percent (10%) each at frequency set points of 59.3 Hertz, 59.0 Hertz and 58.5 Hertz. The installation of underfrequency relays to accomplish any additional load shedding above that already installed shall be completed on a schedule agreed to by the Network Operating Committee. The Network Operating Committee may review the amount of load that would be disconnected automatically and make such adjustments and changes as necessary.

(d) In the event the Transmission Provider reasonably modifies the load shedding system in accordance with Good Utility Practice, the Transmission Customer shall, at its expense, make changes to its equipment and setting of such equipment, as required. The Transmission Customer shall test and inspect the load shedding equipment within ninety

(90) days of taking Network Integration Transmission Service under the Tariff and thereafter in accordance with Good Utility Practice, but no more often than the Transmission Provider, and provide a written report to the Transmission Provider. The Transmission Provider may request a test of the load shedding equipment with reasonable written notice at the expense of the Transmission Provider. If the Transmission Customer installs automatic load shedding equipment, the Transmission Provider shall provide to the Transmission Customer a written report upon each test of the Transmission Provider's automatic load shedding equipment. The Parties will provide each other with copies of NERC compliance reports, as they relate to the NERC Planning Standards on underfrequency load shedding.

8.0 Operational Information

(a) The Transmission Customer shall provide by September 1 of each year the Transmission Customer's Network Resource Availability Forecast (e.g., all planned resource outages, including off-line and on-line dates) for the following year. Such forecast shall be made in accordance with Good Utility Practice. The Transmission Customer shall inform the Transmission Provider, in a timely manner, of any changes to the Transmission Customer's Network Resource Availability Forecast. In the event that the Transmission Provider determines, in compliance with its rights and responsibilities under Section 28.2 of the Tariff, that such forecast cannot be accommodated due to a transmission constraint on its Transmission System, then the Transmission Provider shall notify the Network Operating Committee which shall meet to resolve the matter. If the Network Operating Committee is unable to resolve the matter in a timely fashion, then the Dispute Resolution Procedures set forth in Section 12 of the Tariff shall apply.

(b) The Transmission Customer shall provide, at least thirty-six (36) hours in advance of every calendar day, the Transmission Customer's best forecast of any planned transmission or Network Resource outage(s) and other operating information reasonably required by the Transmission Provider to provide Transmission Service under the NITSA and this NOA. In the event that such planned outages cannot be accommodated due to a transmission constraint on the Transmission Provider's Transmission System and the Network Operating Committee cannot agree on remedial measures, the provisions of Section 33 of the Tariff will be implemented.

(c) The Transmission Provider and the Transmission Customer shall notify and coordinate with the other Party prior to the commencement of any work by either Party (or contractors or agents performing on their behalf) which may directly or indirectly have an adverse effect on the other Party. All information provided by either Party to the other under this Section shall be treated as confidential.

9.0 Network Planning

In order for the Transmission Provider to plan, on an ongoing basis, to meet the Transmission Customer's requirements for Network Integration Transmission Service, the Transmission Customer shall provide to the Transmission Provider, by September 1 of each year, updated information (current year and 10-year projection) for Network Loads

and Network Resources, as well as any other information reasonably necessary to plan for Network Integration Transmission Service. This type of information is consistent with the Transmission Provider's information requirements for planning to serve its Native Load Customers. The data will be provided in a format consistent with that used by the Transmission Provider.

10.0 Character of Service

Power and energy delivered under the NITSA and this NOA shall be delivered as three-phase alternating current at a frequency of approximately sixty (60) Hertz, and at the nominal voltages at the Points of Delivery and Points of Receipt.

11.0 Transfer of Power and Energy Through Other Systems

Since the Transmission Provider's Transmission System is, and will be, directly and indirectly connected with other electric systems, it is recognized that, because of the physical and electrical characteristics of the facilities involved, electric capacity and energy delivered under the NITSA and this NOA will flow through such other systems. The Parties agree to advise other electric systems as deemed appropriate of such scheduled transfers and to attempt to maintain good relationships with affected third parties. The Parties further agree that the Transmission Customer will be responsible for making arrangements, suitable to the Transmission Provider, with neighboring transmission providers as necessary for the scheduling and delivery of electric capacity and energy from any other designated or non-designated Network Resources of the Transmission Customer to the Transmission Provider's Control Area.

Attachment F
Other Charges

1.0 Direct Assignment Charges (recurring):

ATTACHMENT G

NETWORK OPERATING AGREEMENT

(DEP ZONE AND DEF ZONE)

The Transmission Provider and _____ (Transmission Customer) agree that the provisions of this Network Operating Agreement ("NOA") and the Service Agreement govern the Transmission Provider's provision of Network Integration Service to the Transmission Customer in accordance with the Transmission Provider's Open-Access Transmission Tariff (Tariff), as it may be amended from time to time. Unless specified herein, capitalized terms shall refer to terms defined in the Tariff.[1]

1.0 Control Area Requirements

The Transmission Customer shall: (i) operate as a Control Area under applicable guidelines of the North American Electric Reliability Corporation ("NERC"), the Florida Regional Reliability Council ("FRCC"), and/or the SERC Reliability Corporation ("SERC") as applicable; or (ii) satisfy its Control Area requirements, including all Ancillary Services, by contracting with the Transmission Provider; or (iii) satisfy its Control Area requirements, including all Ancillary Services, by contracting with another entity that can satisfy those requirements in a manner that is consistent with the Tariff and Good Utility Practice and satisfies NERC and SERC standards. The Transmission Customer shall plan, construct, operate and maintain its facilities and system in accordance with Good Utility Practice, which shall include, but not be limited

---

[1] This Attachment G applies only to the DEP Zone and the DEF Zone. The NOA applicable to the DEC Zone is available at Attachment F-2, as Attachment E to the Service Agreement for Network Integration Transmission Service.

to, all applicable guidelines of NERC and FRCC and/or SERC, as they may be modified from time to time, and any generally accepted practices in the region that are consistently adhered to by the Transmission Provider.

2.0 Redispatch Procedures

(a) If the Transmission Provider determines that redispatching resources (including reductions in off-system purchases and sales) to relieve an existing or potential transmission constraint is the most effective way to ensure the reliable operation of the Transmission System, the Transmission Provider will redispatch the Transmission Provider's resources, and request the Transmission Customer to redispatch its resources, on a least-cost basis, without regard to the ownership of such resources. The Transmission Provider will maintain a redispatch protocol and will apprise the Transmission Customer of its redispatch practices and procedures, as they may be modified from time to time.

(b) The Transmission Customer will submit verifiable cost data for its resources, which estimate the cost to the Transmission Customer of changing the generation output of its Network Resources, to the Transmission Provider. This cost data will be used, along with similar data for the Transmission Provider's resources, as the basis for least-cost dispatch. The Transmission Provider's bulk power operations personnel will keep this data confidential, and will not disclose it to the Transmission Provider's marketing personnel. If the Transmission Customer experiences changes to its costs, the Transmission Customer will submit those changes to the Transmission Provider's Energy Control Center. The Transmission Provider will implement least-cost redispatch consistent with its existing

contractual obligations and its current practices and procedures for its own resources per Sections 33.2 and 42.2 of the Tariff. The Transmission Customer shall respond within ten minutes to requests for redispatch from the Transmission Provider's Energy Control Center.

(c) The Transmission Customer may audit, at its own expense, particular redispatch events (such as the cause or necessity of the redispatch) during normal business hours following reasonable notice to the Transmission Provider. Either the Transmission Customer or the Transmission Provider may request an audit of the other Party's cost data. Any audit of cost data will be performed by an independent agent at the requesting Party's cost. Such independent agent will be a nationally recognized accounting firm and will be required to keep all cost data confidential.

(d) Once redispatch has been implemented, the Transmission Provider will book in a separate account the redispatch costs incurred by the Transmission Provider and the Transmission Customer based on the submitted cost data. The Transmission Provider and the Transmission Customer will each bear a proportional share of the total redispatch costs pursuant to Sections 33 and 42 of the Tariff. The redispatch charge or credit, as appropriate, will be reflected on the Transmission Customer's monthly bill.

3.0 Metering

(a) Unless otherwise agreed and except as provided in Section 3(b), the Transmission Provider will be responsible for the installation, operation, maintenance, repair and replacement of all metering equipment necessary to provide Network

Integration Service. The charge for such equipment and service shall be as set forth in the Network Service Agreement. All metering equipment shall conform to Good Utility Practice and, if it is electrically located in the Transmission Provider's Control Area, the standards and practices of the Transmission Provider's Control Area. Prior to installation of any metering equipment by the Transmission Customer or its agents, the Transmission Provider and the Transmission Customer shall review the metering equipment to ensure conformance with such standards or practices.

(b) Unless otherwise agreed, electric capacity and energy received by the Transmission Provider from the Transmission Customer will be measured by meters installed and maintained by the Transmission Customer at the Transmission Customer's Network Resources if such Network Resources are electrically located within the Transmission Provider's Control Area. When measurement is made at any location other than a point of receipt, suitable adjustment for losses between the point of measurement and the point of receipt will be agreed upon in writing between the Parties hereto and will be applied to all measurements so made. Metered receipts used in billing and accounting hereunder will in all cases include adjustment for such losses.

(c) Electric capacity and energy delivered to the Transmission Customer's points of delivery by the Transmission Provider will be measured by meters installed at the points of delivery. When measurement is made at any location other than a point of delivery, suitable adjustment for losses between the point of measurement and the point of delivery will be agreed upon in writing between the Parties hereto and

will be applied to all measurements so made. Metered receipts used in billings and accounting hereunder will in all cases include adjustments for such losses.

(d) Meters at the Transmission Customer's Network Resources and Network Loads will be tested at least biennially. In addition, the Transmission Customer will, upon request of the Transmission Provider, test any of its meters at its Network Resources or Network Loads used for determining the receipt or delivery of capacity and energy by the Transmission Provider. Representatives of the Transmission Provider will be afforded an opportunity to witness such tests. In the event the test shows the meter to be inaccurate, the Transmission Customer will make any necessary adjustments, repairs or replacements thereon.

(e) In the event any meter used to measure capacity and energy fails to register or is found to be inaccurate, appropriate billing adjustments, based on the best information available, will be agreed upon by the Parties hereto. Any meter tested and found to be not more than two percent above or below normal will be considered to be correct and accurate insofar as correction of billing is concerned. If, as a result of any test, a meter is found to register in excess of two percent either above or below normal, then the reading of such meter previously taken will be corrected according to the percentage of inaccuracy so found, but no correction will extend beyond ninety days prior to the day on which inaccuracy is discovered by such test.

(f) The Transmission Provider will have the right to install suitable metering equipment at any Point(s) of Receipt or Delivery, as herein provided for the purpose of checking the meters installed by the Transmission Customer.

(g) The Transmission Customer will read the meters owned by it, except as may be mutually agreed, and will furnish to the Transmission Provider all meter readings and other information required for operations and for billing purposes. Such information will remain available to the Transmission Provider for 3 years.

4.0 Control Area and Data Equipment

(a) Unless otherwise agreed the Transmission Provider will be responsible for the installation, modification, operation, maintenance, repair and replacement of all data acquisition equipment, protection equipment, and any other associated equipment and software, which may be required by either Party for the Transmission Customer to operate in accordance with its choice under Section 1.0 of this NOA. The charge for such equipment and service shall be set forth in the Network Service Agreement. Such equipment shall conform to Good Utility Practice and, if the Transmission Customer is electrically located within the Transmission Provider's Control Area, the standards and practices of the Transmission Provider's Control Area. Prior to installation of any such equipment by Transmission Customer or its agents, the Transmission Provider and the Transmission Customer shall review the equipment and software required by this Section to ensure conformance with such standards or practices.

(b) The selection of real time telemetry and data to be received by the Transmission Provider's Energy Control Center and the Transmission Customer shall be at the reasonable discretion of the Transmission Provider's Control Area, as deemed necessary for reliability, security, economics, and/or monitoring of system operations. This telemetry includes, but is not limited to, loads, line flows,

voltages, generator output, and breaker status at any of the Transmission Customer's transmission facilities. To the extent telemetry is required that is not available, the Transmission Customer shall, at its own expense, install any metering equipment data acquisition equipment, or other equipment and software necessary for the telemetry to be received by the Transmission Provider's Energy Control Center.

(c) Each Party shall be responsible for implementing any computer modifications or changes required to its own computer system(s) as necessary to implement this Section.

5.0 Operating Requirements

(a) The Transmission Customer shall operate its generating resources inside the Transmission Provider's Control Area in a manner consistent with that of the Transmission Provider, including following voltage schedules, free governor response, meeting power factor requirements at the point of interconnection with the Transmission Provider's system, and other such criteria required by NERC and FRCC and/or SERC, and consistently adhered to by the Transmission Provider.

(b) [DEP Zone: When load is being served by the Transmission Customer in the DEP Zone, the Transmission Customer shall maintain a power factor of 100% to 90% lagging at each point of delivery determined on the basis of the 60-minute metered or computed reactive demand (kVar) for each hour of the month and the corresponding 60-minute metered or computed kilowatt demand for that hour. In addition, the Transmission Customer shall maintain a power factor of 100% to

95% lagging at each point of delivery, determined on the basis of the 60-minute metered or computed kilowatt demand at the time of DEP's monthly transmission system peak and the corresponding 60-minute reactive demand (kVar) for that hour. To the extent the Transmission Customer owns or operates reactive devices which could cause reactive power to flow onto the DEP system, DEP and the Transmission Customer will develop procedures governing the Transmission Customer's delivery of reactive power to the DEP system. In the event that the Transmission Customer does not satisfy the power factor requirements outlined above or the Parties cannot agree on the procedures governing the customer's delivery of reactive power, DEP reserves the right to make a unilateral filing with FERC under Section 205 of the Federal Power Act seeking authorization to either (i) assess appropriate charges to the Transmission Customer for reactive power supplied to the Transmission Customer by DEP up to the level of minimum power factor requirement, or (ii) install power factor correction equipment sufficient to bring the Transmission Customer's power factor into compliance with the power factor requirements, and to assess the Transmission Customer the reasonable cost of such equipment.]

DEF Zone: The Transmission Customer shall comply with the power factor requirements set forth in OATT Attachment V.

(c) Insofar as practicable, the Transmission Provider and the Transmission Customer shall protect, operate, and maintain their respective systems so as to avoid or minimize the likelihood of disturbances which might cause impairment of service on the system(s) of the other. The Parties shall implement load shedding

programs to maintain the reliability and integrity of the Transmission System, consistent with the standards of NERC and FRCC, as provided in Sections 33.6 and 42.6 of the Tariff. Load shedding shall include: (1) automatic load shedding by under frequency relay or (2) manual load shedding. The Transmission Provider will implement load shedding to maintain the relative sizes of load served, unless otherwise required by circumstances beyond the control of the Transmission Provider or the Transmission Customer. Automatic load shedding devices will operate without notice. When manual load shedding is necessary, the Transmission Provider shall notify the Transmission Customer's dispatchers or schedulers of the required action and the Transmission Customer shall comply within ten minutes.

(d) The Transmission Customer shall, at its own expense, provide, operate, and maintain in service high-speed, digital under frequency load shedding equipment. For load served in or from the DEP Zone, the Transmission Customer will install under frequency relays to disconnect automatically its Network Load in a manner consistent with that followed by the Transmission Provider. For load served in or from the DEF Zone, the under frequency load shedding equipment shall enable the automatic disconnection of a minimum between forty and forty-four percent (40-44%) of its Network Load in a manner consistent with the Transmission Provider and the FRCC, which is set forth below:

UFLS Step	Frequency (hertz) Set-Points	Time Delay (seconds)	Load as % of Total TO or DP Peak Network Load (%)	Total Cumulative Amount of Load as % of Total TO or DP Peak Network Load (%)	Acceptable Range for UFLS Load Assignment as % of Total TO or DP Peak Network Load (%)
1	59.6	<= 0.28	7	7	6 – 9
2	59.4	<= 0.28	5	12	11 – 14
3	59.2	<= 0.28	5	17	16 – 19
4	59.0	<= 0.28	5	22	21 – 25
5	58.7	<= 0.28	6	28	27 – 31
6	58.4	<= 0.28	4	32	31 – 35
7	58.2	<= 0.28	4	36	35 – 39
8	59.6	15.0 ± 0.5	2	38	37 – 41
9	59.6	22.0 ± 0.5	2	40	40 - 44

* Time Delay = Intentional delay + relay delay + breaker delay.

The installation of under frequency relays to accomplish any load shedding in addition to that already installed shall be completed on a schedule agreed to by the Network Operating Committee. The Network Operating Committee may review the amount of load that would be disconnected automatically and make such adjustments and changes as necessary.

(e) In the event the Transmission Provider modifies the load shedding system, the Transmission Customer shall, at its expense, make changes to its equipment and the settings of such equipment, as required. The Transmission Customer shall test and inspect the load shedding equipment within ninety (90) days of taking Network Integration Transmission Service under the Tariff and thereafter in accordance with Good Utility Practice, and provide a written report to the

Transmission Provider. The Transmission Provider may request a test of the load shedding equipment with reasonable notice.

(f) The Transmission Customer shall ensure that all Network Resources meet the Transmission Provider's requirements for parallel operation of non-utility generation.

6.0 Operational Information

The Transmission Customer shall provide data needed for the safe and reliable operation of the Transmission Customer's and the Transmission Provider's Control Area and to implement the provisions of the Tariff. The Transmission Provider will treat this information as confidential and will not divulge it to its marketing personnel.

(a) The Transmission Customer [served from the DEP Zone shall provide by September 1st] [served from the DEF Zone shall provide by November 30th] of each year the Customer's Network Resource availability forecast (e.g., all planned resource outages, including off-line and on-line dates) for the following year. Such forecast shall be made in accordance with Good Utility Practice. The Transmission Customer shall inform the Transmission Provider, in a timely manner, of any changes to the Transmission Customer's Network Resource availability forecast. In the event that the Transmission Provider determines that such forecast cannot be accommodated due to a transmission constraint on its Transmission System, and such constraint may jeopardize the security of its Transmission System or adversely affect the economic operation of either the Transmission Provider or the Transmission Customer, the provisions of Sections 33.2 and 42.2 of the Tariff will be implemented.

(b) The Transmission Customer [served from the DEP Zone shall provide at least 14 calendar days] [served from the DEF Zone shall provide at least 36 hours] advance notice of the Transmission Customer's best forecast of any planned transmission or Network Resource outage(s) and other operating information that the Transmission Provider deems appropriate. In the event that such planned outages cannot be accommodated due to a transmission constraint on the Transmission Provider's Transmission System, the provisions of Sections 33.2 and 42.2 of the Tariff will be implemented.

(c) The Transmission Provider and the Transmission Customer shall notify and coordinate with as much advance notice as reasonably possible with the other Party prior to the beginning of any work by the other Party (or contractors or agents performing on their behalf), which may directly or indirectly have adverse effects on the reliability and security of the other Party's system.

(d) The Transmission Customer is responsible for replacing Real Power Losses associated with all transmission service in accordance with Sections 28.5 and 36.11 of the Tariff. The Transmission Customer must identify the party responsible for supplying Real Power Losses before the transaction takes place.

7.0 Network Planning

In order for the Transmission Provider to plan, on an ongoing basis, to meet the Transmission Customer's requirements for Network Integration Service, the Transmission Customer [served from the DEP Zone shall provide, by January 1st of each year, updated information (current year and 15-year projections)] [served from the DEF Zone shall provide, by November 30th of each year, updated information (current year and 10-year

projections)] for Network Loads and Network Resources, as well as any other information reasonably necessary to plan for Network Integration Service. This type of information is consistent with the Transmission Provider's information requirements for planning to serve its Native Load Customers. The data will be provided in a format consistent with that used by the Transmission Provider.

8.0 Character of Service

Power and energy delivered under the Service Agreement and this NOA shall be delivered as three-phase alternating current at a nominal frequency of sixty (60) Hertz, and at the nominal voltages at the delivery and receipt points.

9.0 Transfer of Power and Energy Through Other Systems

Since the Transmission Provider's Transmission System is, and will be, directly and indirectly connected with other electric systems, it is recognized that, because of the physical and electrical characteristics of the facilities involved, power delivered under the Service Agreement and this NOA may flow through such other systems. The Parties agree to advise other electric systems as deemed appropriate of such scheduled transfers and to attempt to maintain good relationships with affected third parties. If the Transmission Provider is charged by another electrical system for loop flow charges, then the Transmission Provider may seek recovery of these charges from the Transmission Customer based on his cost responsibility pursuant to § 205 of the Federal Power Act.

10.0 Notice

If any Notice or request made to or by either Party regarding this NOA shall be made to the representative of the other Party as indicated in the Network Service Agreement.

11.0 Incorporation

The Tariff and the Service Agreement, as may be amended from time to time, are incorporated herein and made a part hereof.

12.0 Term

The term of this NOA shall be concurrent with the term of the Service Agreement between the Parties.

IN WITNESS WHEREOF, the Parties have caused this NOA to be executed by their respective authorized officials.

Transmission Provider:

By:_____ _____ _____
Name Title Date

Transmission Customer:

By:_____ _____ _____
Name Title Date

ATTACHMENT H

NETWORK INTEGRATION TRANSMISSION SERVICE

I. DEF Zone

The Annual Transmission Revenue Requirement for purposes of Network Integration Transmission Service shall be as determined by Schedule 10-A.2.

II. DEC Zone

The Annual Transmission Revenue Requirement for purposes of Network Integration Transmission Service shall be as determined by Schedule 10-B, Exhibit B.

III. DEP Zone

The Transmission Customers shall compensate the Transmission Provider each month for Network Load for the applicable month as follows:

1. **Monthly Delivery:** The charge for network integration service is derived from the Formula Rate, which is set forth in OATT Attachment H.1. The resulting rate is posted on the Transmission Provider's OASIS. The Formula Rate is implemented in accordance with the OATT Attachment H.2 Formula Rate Implementation Protocols. The charge for Network Integration Transmission Service shall be updated annually on June 1st of each year in accordance with the OATT Attachment H.2 Formula Rate Implementation Protocols.

NOTE: All quantities used in calculating the Network Integration Transmission Customer's Network Load shall be adjusted to the transmission system input level, i.e., shall include the transmission capacity amount associated with any applicable losses. As a result, for services provided on and after June 1, 2019, the Customer's load, as metered at the Point(s) of Delivery (transmission exit level), will be increased using the Real Power Loss factor which will be calculated effective as of June 1, 2019 and on an annual basis thereafter in accordance with the methodology for doing so set forth in Attachment W and in accordance with Section 1.l of Attachment H.2, DEP Formula Rate Implementation Protocols to bring the Customer's load to the generation level

2. The Network Customer will designate and operate all Network Resources in accordance with the sub-parts of Section 30 of this Tariff. If the Network Customer desires to serve a portion of its load from an undesignated resource, it will be considered Secondary Service in accordance with Section 28.4.

3. The Transmission Customer will compensate the Transmission Provider for any redispatch costs in accordance with Section 34.4.

ATTACHMENT H.1

DUKE ENERGY PROGRESS, LLC

OATT Transmission Non-Levelized Rate Formula Template Using Form-1 Data

Summary of Rates

Line		Reference	OATT Transmission
1	**Gross DEP Revenue Requirement**	Page 3, Line 33	0
	Revenue Credits:		
2	Acct 454 - Transmission Related	Exhibit DEP - 3, p.1	0
3	Acct 456.1 - Net Trans. Rate Revenue Credit	Exhibit DEP - 3, p. 2	0
4	Other Acct 456 - Allocable to Transmission	Exhibit DEP - 3, p. 3	0
5	**Total Revenue Credits**		0
6	**Interest Disbursed w/ Network Prepay Refunds**	Exhibit DEP-5	0
7	**Revenue Req't - Customer Owned Facilities**	**DEP - 6, p.1, line 38**	0
8	**Net Revenue Requirements** (Line 1 - Line 5 + Line 6 + Line 7)		0
9	**Divisor - Sum of Monthly MW Transmission System Peaks (Excludes STF)**	p.5, line 5 Total	0
10	**Trans. Rev Req't Rate $/MW-Month**	Line 8 / Line 9	0
11	**Storm Costs Adder $/MW-Month**	Page 5, Line 15 + Line 22	0
12	**Trans. Rev Req't Rate $/MW-Mon. with Storm Costs Adder**	Line 10 + Line 11	0

			For Service Rendered	
			Jun - Dec	Jan - May
			Year yyyy+1	Year yyyy+2
13	**NC Excess ADIT Credit**	Attachment A Annual Values /12	0	0
14	**Total Firm Monthly Trans. $/MW-Month**	Line 12 + Line 13	0	0
15	**Annual Firm Trans $/MW-year**	Line 14 * 12	0	0
16	**Weekly Firm/Non-Firm PTP Rate $/MW-Week**	Line 15 / 52 weeks	0.00	0.00
	Daily Firm/Non-Firm PTP Rates ($/MW):			
17	On-Peak Days	Line 16 / 5 days	0.00	0.00
18	Off-Peak Days	Line 16 / 7 days	0.00	0.00
	Non-Firm Hourly PTP Rates ($/MWh):			
19	On-Peak Hours	Line 17 / 16 hrs	0.00	0.00
20	Off-Peak Hours	Line 18 / 24 hrs	0.00	0.00

DUKE ENERGY PROGRESS, LLC
OATT Transmission Non-Levelized Rate Formula Template Using Form-1 Data

Development of Rate Base

Line	RATE BASE:	Reference	Total	Allocation Type	Allocation Factor	OATT Transmission
	Gross Plant in Service (Note A):					
1	Production Plant	DEP - 6, p.1, line 15	0	N/A		
2	Transmission Plant	p. 4, line 1	0	TP	0.00000	0
3	Distribution Plant	DEP - 6, p.1, line 17	0	N/A		
4	General Plant	DEP - 6, p.1, line 18	0	OATT LABOR	0.00000	0
5	Intangible Plant	DEP - 6, p.1, line 14	0	OATT LABOR	0.00000	0
6	**Total Gross Plant**		0	GP =	0.00000	0
	Accumulated Depreciation:					
7	Production Depr. Reserve	DEP - 6, p.1, line 20	0	N/A		
8	Transmission Depr. Reserve	DEP - 6, p.1, line 21	0	TP	0.00000	0
9	Distribution Depr. Reserve	DEP - 6, p.1, line 22	0	N/A		
10	General Depr. Reserve	DEP - 6, p.1, line 23	0	OATT LABOR	0.00000	0
11	Intangible Amort. Reserve	DEP - 6, p.1, line 13	0	OATT LABOR	0.00000	0
12	**Total Accumulated Depr.**		0			0
	Net Plant in Service					
13	Net Production Plant	Line 1 - Line 7	0			
14	Net Transmission Plant	Line 2 - Line 8	0			0
15	Net Distribution Plant	Line 3 - Line 9	0			
16	Net General Plant	Line 4 - Line 10	0			0
17	Net Intangible Plant	Line 5 - Line 11	0			0
18	**Total Net Plant**		0	NP =	0.00000	0
	Adjustments to Rate Base - Deferred Taxes					
19	ADIT - 190	DEP - 6, p.1, line 27	0	Exhibit DEP - 6, p 2		0
20	ADIT - 282 (Negative)	DEP - 6, p.1, line 34	0	Exhibit DEP - 6, p 3		0
21	ADIT - 283 (Negative)	DEP - 6, p.1, line 35	0	Exhibit DEP - 6, p 4		0
22	**Total Deferred Tax Adjustments**		0			0
	Adjustments to Rate Base – Other :					
23	Accum Provision for I&D 228.2 (Neg)	DEP - 6, p.1, line 7	0	OATT LABOR	0.00000	0
24	Accum Provision for P&B 228.3 (Neg)	DEP - 6, p.1, line 8	0	OATT LABOR	0.00000	0
25	Accum. Misc Oper Prov. 228.4 (Neg)	DEP - 6, p.1, line 9	0	Exhibit DEP - 6, p 5		0
25a	Net Excess/ Deficient Deferred Tax Adj (182.3 & 254)	DEP- 2 – Attach B, line 7	0	Exhibit DEP- 2 – Attach B		0
26	SFAS 158 Regulatory Asset	DEP - 6, p.1, line 26	0	OATT LABOR	0.00000	0
27	**Net Rate Base Adj.**		0			0
28	**Plant Held for Future Use**	DEP - 6, p.1, line 19	0	Note B		0
29	**Transmission CWIP - Identified Projects (DEP - 4)**		0		0.50000	0
30	**OATT CWIP Contra**		0	p 5, line 8	0.00000	0
	Rate Base Adjustment - Network Upgrade Prepayment Balances (DEP - 5):					
31	Balance - Network Prepayments		0	D/A	(1.00000)	0
32	Accrued Interest Balance		0	D/A	1.00000	0
33	Reversal of Anson/Richmond AFUDC per Settlement		0	D/A	1.00000	0
34	**Total Network Upgrade Prepayment Adjustments**		0			0
	Working Capital:					
35	Cash Working Capital (1/8 O&M)	Page 3, line 15				0
36	M&S - Transmission	DEP - 6, p.1, line 24	0	TP	0.00000	0
37	M&S - Stores Expense	DEP - 6, p.1, line 25	0	OATT LABOR	0.00000	0
38	Prepayments	DEP - 6, p.1, line 1	0	GP	0.00000	0
39	**Total Working Capital**					0
40	**Rate Base (Sum of Lines 18, 22, 27, 28, 29, 30, 34, and 39)**					0

DUKE ENERGY PROGRESS, LLC
OATT Transmission Non-Levelized Rate Formula Template Using Form-1 Data

Development of Revenue Requirements

Line	EXPENSES:	Reference	Total	Allocation Type	Allocation Factor	OATT Transmission
	O&M Expense					
1	TOTAL Transmission Expenses (Note I)	DEP - 6, p.1, line 39	0			
2	Less Account 561.1-561.4	DEP - 6, p.1, line 36	0			
3	Less Account 565	DEP - 6, p.1, line 37	0			
4	Net Transmission O&M	Note C	0	TP	0.00000	0
5	Total Admin & General Expenses	DEP - 6, p.1, line 43	0			
5A	Post-Employment Benefits Other Than Pension Expenses included in line 5 for information only	NOTE E	0			
6	Less (924) Property Insurance	DEP - 6, p.1, line 40	0			
7	Less (928) Regulatory Commission Expenses	DEP - 6, p.1, line 41	0			
8	Less (930.1) General Advertising Expenses	DEP - 6, p.1, line 42	0			
9	Less Industry Dues,R&D and Nuc Assoc Exp	DEP - 6, p.1, line 44	0			
10	Net Labor Related A&G		0	OATT LABOR	0.00000	0
11	(924) Property Insurance	Line 6	0	GP	0.00000	0
12	Trans. Related Regulatory Expense	DEP - 6, p.1, line 48	0	D/A	1.00000	0
13	Trans. Related Advertising Exp.	Note D	0	D/A	1.00000	0
14						
15	**Total O&M (Sum of Lines 4, 10, and 11 thru 14)**					**0**
	Depreciation Expense					
16	Transmission Depr. Expense	DEP - 6, p.1, line 46	0	TP	0.00000	0
17	General Depr. Expense	DEP - 6, p.1, line 47	0	OATT LABOR	0.00000	0
18	Intangible Amortization	DEP - 6, p.1, line 45	0	OATT LABOR	0.00000	0
19	**Total Depreciation**		0			**0**
	Taxes Other Than Income (Note F)					
20	Labor Related	DEP - 6, p.1, lines 28 & 31	0	OATT LABOR	0.00000	0
21	Property Related	DEP - 6, p.1, lines 29 & 30	0	GP	0.00000	0
22	**Total Other Taxes**		0			**0**
	Return:					
23	Rate Base (Page 2, Line 40) * Rate of Return (Page 4, Line 31)					**0**
	Income Taxes:					
24	NC/SC Composite	Note G	0.00%			
25	Federal		0.00%			
26	Composite T = State + Federal * (1 - State)		0.00%			
27	Tax Rev.Req't Factor = T / (1 -T) * (1 - Wtd.Debt.Cost/R)		0.00%			
28	Tax Gross Up Factor = 1 / (1 -T)		0.000			
29	Amortized ITC (Negative)	DEP - 6, p.1, line 32	0			
30	ITC Adjustment (Line 28 * Line 29)		0	NP	0.00000	0
30a	Net Excess/ Deficient Deferred Tax Expense	DEP – 2 Attach B, line 14	0			
30b	Deferred Tax Adjustment (Line 28 * Line 30a)					0
31	Income Taxes Calculated (Line 23 * Line 27)					0
32	**Total Income Taxes (Sum of Lines 30, 30b, and 31)**					**0**
33	**TOTAL REVENUE REQUIREMENT (Sum of Lines 15, 19, 22, 23, and 32)**					**0**

DUKE ENERGY PROGRESS, LLC
OATT Transmission Non-Levelized Rate Formula Template Using Form-1 Data

Supporting Allocation Factor and Return Calculations

Line		Reference	Total
	Transmission Plant Included in OATT Rate:		
1	Total Transmission Plant	Note K	0
2	Less Gen. Step-up Transformers in 353	Note D	0
3	Less Interconnection Facilities (Order 2003)	DEP - 5, p 3	0
3A	Less New Radial Facilities	Note L	0
3B	Plus Contra EPIS - OATT (Neg.)	p. 5, line 7	0
4	Trans Plant for OATT Rate		0
5	**TP Allocator (Line 4 / Line 1)**	Note C	0.00000
	Labor Allocation Factor		
6	Total Direct Payroll - O&M Labor	DEP - 6, p.1, line 51	0
7	A&G Labor	DEP - 6, p.1, line 50	0
8	Adj. - RCO Labor in A&G Labor	Company Records	0
9	Adjusted Labor w/o A&G (Line 6 - Line 7 + Line 8)		0
10	Transmission O&M Labor	DEP - 6, p.1, line 49	0
11	**Trans Labor Factor (Line 10 / Line 9)**		0.00000
12	**OATT LABOR Allocator (Line 5 * Line 11)**	Note C	0.00000
	Return and Capitalization:		
13	Long Term Interest Expense (Note J)	DEP - 6, p.1, line 11	0
14	Less Interest on Securitization Bonds	Note H	0
15	Net Long Term Interest Expense		0
16	Preferred Dividends (positive)	DEP - 6, p.1, line 12	0
17	Long Term Debt	DEP - 6, p.1, line 6	0
18	Less Loss on Reacquired Debt	DEP - 6, p.1, line 2	0
19	Plus Gain on Reacquired Debt	DEP - 6, p.1, line 10	0
20	Less Securitization Bonds	Note H	0
21	Net Long Term Debt		0
22	Preferred Stock	DEP - 6, p.1, line 3	0
	Common Stock Development:		
23	Proprietary Capital	DEP - 6, p.1, line 5	0
24	Less Preferred Stock	Line 22	0
25	Less Account 216.1	DEP - 6, p.1, line 4	0
26	Common Stock		0
27	Total Capitalization (Sum Lines 21, 22, 26)		0

	SUMMARY CAP STRUCTURE	Weight	Cost	Weighted Cost
28	Long term Debt	0.00%	0.00%	0.00%
29	Preferred Stock	0.00%	0.00%	0.00%
30	Common Equity (Note M)	0.00%	10.00%	0.00%
31	**Overall Return: R_0 =**			**0.0000%**

DUKE ENERGY PROGRESS, LLC
OATT Transmission Non-Levelized Rate Formula Template Using Form-1 Data
Wholesale Transmission Allocation Factor, 2018 Storm Costs and Explanatory Notes

Line		Reference	Total	Allocation Type	Allocation Factor	OATT Transmission
	Denominator for Wholesale Transmission:					
1	Firm Network Service for Self	DEP - 6, p.1, line 53	0		0.00000	0
2	Firm Network Service for Others	DEP - 6, p.1, line 54	0		1.00000	0
3	Long-Term Firm P-t-P Reservations	DEP - 6, p.1, line 55	0		1.00000	0
4	Other Long-Term Firm Service	DEP - 6, p.1, line 56	0		1.00000	0
5	Total System Long Term Firm Transmission Load		0			0
6	**Wholesale Trans Allocation Factor**					**0**
	Memo: OATT Contras from 50% in CWIP in Rate Base					
7	0101760 - CONTRA EPIS (Note N)		0	1 / Line 6	0	0
8	0107730 - CONTRA CWIP (Note N)		0	1 / Line 6	0	0
9	**2018 Storm Costs (Wholesale Portion) – Deferred Debit as of 12/31/18**	Company Records/ Note I	0			
	Three-Year Amortization of 2018 Storm Costs Amount					
10	Unamortized Balance (Wholesale Portion)	Company Records	0	TP	0.0000	0
11	Return	Line 10 * Rate of Return (Page 4, Line 31)				0
12	Income Taxes	Line 11 * Tax Factor (Page 3, Line 27)				0
13	Annual Storm Cost Amortization	Line 9 / 3	0	TP	0.0000	0
14	Total Storm Cost to be Added	Sum of Lines 11, 12 and 13				0
15	**2018 Storm Costs Adder $/MW-Month**	Line 14 / Line 5				0
16	**2019 Storm Costs (Wholesale Portion) - Deferred Debit**	Company Records / Note I	0			
	Two-Year Amortization of 2019 Storm Costs Amount					
17	Unamortized Balance (Wholesale Portion)	Company Records		TP	0.0000	0
18	Return	Line 17 * Rate of Return (Page 4, Line31)				0
19	Income Taxes	Line 18 * Tax Factor (Page 3, Line 27)				0
20	Annual Storm Cost Amortization	Line 16 / 2		TP	0.0000	0
21	Total Storm Cost to be Added	Sum of Lines 18, 19, and 20				0
22	**2019 Storm Costs Adder $/MW-Month**	Line 21 / Line 5				0

Note A: Excludes Asset Retirement Obligations from plant balances

Note B: FERC Form 1 page 214 excluding non-transmission related items

Note C: The allocator "TP" is the percent of gross transmission plant that is OATT related, i.e., after removal of interconnections, new radial facilities and generator step-up transformer investment and adjusting for contra EPIS-OATT. It also serves as the basis for deriving OATT-related transmission labor from the Form-1 reported value.

Note D: Analysis of Company books.

Note E: DEP will provide in connection with each Annual Update, a copy of the entire annual actuarial valuation report supporting the Derivation of the annual Postretirement Benefits Other than Pensions ("PBOP") expense as charged to FERC account 926, and the amount of such expense included in Total Admin and General Expenses provided on Exhibit DEP-2, page 3, line 5 of the Formula Rate. DEP will provide, in connection with each Annual Update, a worksheet that shows the actual PBOP expense components and calculation derivation (including, for each account to which PBOP expense is recorded, the account number, expense amount, description, calculation derivation and source).

Note F: Excludes all income and gross receipts taxes. Labor related other taxes include FICA and unemployment taxes. Property related taxes include county and local property, highway use, and intangible taxes.

Note G: Determined by annual apportionment factors provided by Tax Department

Note H: To the extent DEP is authorized by state utility commission(s) and issues bonds to securitize retail recovery of extraordinary property losses, associated principal and interest expense are excluded in capitalization and return basis.

Note I: 2018 Storm Costs refers to costs incurred in connection with Hurricane Florence, Hurricane Michael and Winter Storm Diego. The 2018 Storm Costs shall be amortized over three years and be reflected in the 2019 OATT Update, the 2020 OATT Update and the 2021 OATT Update, for transmission service rates to be in effect during the periods 6-1-19 through 5-31-20, 6-1-20 through 5-31-21, and 6-1-21 through 5-31-22, respectively. 2018 Storm Costs booked in 2018 included in DEP-2 - Page 5, Line 9, will not be included in TOTAL Transmission Expenses on DEP-2 – Page 3, Line 1.

2019 Storm Costs refers to costs incurred with Hurricane Dorian in 2019. The 2019 Storm Costs shall be amortized over two years and be reflected in the 2021 Annual Update and, the 2022 Annual Update, for transmission service rates to be in effect during the periods 6-1-21 through 5-31-22 and 6-1-22 through 5-31-23, respectively. 2019 Storm Costs booked in 2019 included in DEP-2 – Page 5, Line 9, will not be included in TOTAL Transmission Expenses on DEP-2 – Page 3, Line 1.

Note J: Adjusted to exclude all charges to Account 427 not arising from liabilities included in Account 221 or Account 224.

Note K: DEP – 6, page 1, line 16 adjusted by subtracting the per books wholesale credit for OATT Electric Plant in Service contra, i.e., value at DEP – 2, page 5, line 7 above prior to gross-up for its subsequent use at DEP – 2, page 4, line 3A.

Note L: New Radial Facilities shall have the meaning set forth in Attachment H-3, Formula Rate Notes, Section 1.19(iii)(1).

Note M: The equity component of the capital structure will be capped at 51.0% for service provided January 1, 2016 through May 31, 2016, 52.73% for service provided June 1, 2016 through May 31, 2017,

and 51.0% thereafter. These provisions are subject to the moratoriums set forth in Attachment H.3, Section 1.20.

Note N: Oracle accounts 1010950 and 1071140 translated to Peoplesoft accounts 0101000 and 0107000, respectively, with DEP's conversion to Peoplesoft. As of 2015, there is no longer separate accounts for the OATT Contra balances and they are now buried in 101 and 107 and identified by Resource Types 99940 and 99941.

Exhibit DEP - 2
Attachment A
Year Ending 12/31/2017

DUKE ENERGY PROGRESS, LLC
OATT Transmission Non-Levelized Rate Formula Template Using Form-1 Data

North Carolina Excess ADIT Wholesale Rate Credits ($/MW-Year)
FERC Docket Nos. ER19-463-000 & ER20-____-000

FERC Form 1 Calendar Year yyyy	Service Rendered Jun - Dec Year yyyy+1	Service Rendered Jan - May Year yyyy+2
2017	0	(330)
2018	(330)	(320)
2019	(320)	(310)
2020	(310)	(300)
2021	(300)	(280)
2022	(280)	(270)
2023	(270)	(260)
2024	(260)	(250)
2025	(250)	0

Exhibit DEP - 2
Attachment B
Year Ending 12/31/yyyy

DUKE ENERGY PROGRESS, LLC
OATT Transmission Rate Formula Support
Utilizing Historic Cost Data for (20XX) with Year-End Balances
Accumulated Excess/ Deficient Deferred Income Tax Balances

Line	Item [1]:	Reference	12/31/20XX Balance (Dr)Cr	Allocation [2] Type	Allocation [2] Factor	OATT Transmission
1	Regulatory Assets for Deficient ADIT – Protected	DEP - 2, Attach C	0	Other	Note [2]	0
2	Regulatory Assets for Deficient ADIT – Unprotected PPE	DEP - 2, Attach D	0	Other	Note [2]	0
3	Regulatory Assets for Deficient ADIT – Unprotected Non-PPE	DEP - 2, Attach E [3]	0	Other	Note [2]	0
4	Regulatory Liabilities for Excess ADIT – Protected	DEP - 2, Attach C [3]	0	Other	Note [2]	0
5	Regulatory Liabilities for Excess ADIT – Unprotected PPE	DEP – 2, Attach D [3]	0	Other	Note [2]	0
6	Regulatory Liabilities for Excess ADIT – Unprotected Non-PPE	DEP – 2, Attach E	0	Other	Note [2]	0
7	**Net Deficient/ Excess ADIT Rate Base**		**0**			**0**

	Item [1]:	Reference	Collection/ Amortization (Dr)Cr	Allocation [2] Type	Allocation [2] Factor	OATT Transmission
8	Collection of Deficient Deferred Tax Expense - Protected	DEP - 2, Attach C	0	Other	Note [2]	0
9	Collection of Deficient Deferred Tax Expense – Unprotected PPE	DEP - 2, Attach D	0	Other	Note [2]	0
10	Collection of Deficient Deferred Tax Expense – Unprotected Non-PPE	DEP - 2, Attach E	0	Other	Note [2]	0
11	Amortization of Excess Deferred Tax Expense - Protected	DEP - 2, Attach C	0	Other	Note [2]	0
12	Amortization of Excess Deferred Tax Expense – Unprotected PPE	DEP – 2, Attach D	0	Other	Note [2]	0
13	Amortization of Excess Deferred Tax Expense – Unprotected Non-PPE	DEP – 2, Attach E	0	Other	Note [2]	0
14	**Net Excess/ Deficient Deferred Tax Expense**		**0**			**0**

Notes:

[1] Excess/ Deficient Deferred Tax Expense shall equal the return or collection of excess or deficient deferred taxes as shown in DEP – 2 Attachments C, D, and E of this Exhibit, and the return or collection of excess or deficient deferred taxes that result from any future federal or state income tax rate change, as shown in the format of DEP – 2 – Attachment F, which DEP will populate and provide subsequent to such tax change.

[2] The allocation factor to be applied to the 2017 TCJA balances is 0.09802 and is based on historic 2016 system-wide deferred income tax balances that were allocated to Transmission. DEP proposes to use an allocation factor based on the historical system-wide deferred income tax balances that were allocated to Transmission for the year of the tax rate change for Excess/ Deficient Deferred Income Tax balances created due to future tax rate changes. The allocation factor applied to the future tax rate changes will be identified in a new sentence added to this Note.

[3] Balances from DEP - 2 – Attachments C, D, and E from column H (Prior Year-End Balance) for any given Rate Year Update for purposes of establishing rates effective June 1.

DUKE ENERGY PROGRESS, LLC
OATT Transmission Rate Formula Support
Protected Federal Excess Deferred Tax Worksheet[1]

	Dr./(Cr.) **190**	*Dr./(Cr.)* **282**	*Dr./(Cr.)* **283**	*Dr./(Cr.)* **Total**
Pre-Remeasurement ADIT	74,872,655	(2,833,210,082)	0	(2,758,337,427)
Post Remeasurement ADIT	354,338,816	(1,777,222,793)	0	(1,422,883,978)
ADIT Remeasurement	279,466,161	1,055,987,289	0	1,335,453,449
Offset (Dr.)/Cr. [9] **TCJA Remeasurement**	*Dr./(Cr.)* **190**	*Dr./(Cr.)* **282**	*Dr./(Cr.)* **283**	*Dr./(Cr.)* **Total**
182.3 (Excluding Gross Up)	0	0	0	0
254 Gross Up [2]	309,415,223	0	0	309,415,223
Balance Sheet Only Total [3]	309,415,223	0	0	309,415,223
Deferred Debit	*0*	*0*	*0*	*0*
Deferred Credit	*0*	*0*	*0*	*0*
182.3	0	0	0	0
Deferred Debit	*0*	*1,055,987,289*	*0*	*1,055,987,289*
Deferred Credit	*(29,949,062)*	*0*	*0*	*(29,949,062)*
254	(29,949,062)	1,055,987,289	0	1,026,038,226
Fixed Rate Agreement Proforma	(589,392)	20,781,640	0	20,192,248
EDIT Liability Total [4]	**(30,538,454)**	**1,076,768,929**	**0**	**1,046,230,474**
Debit	*0*	*0*	*0*	*0*
Credit	*0*	*0*	*0*	*0*
411.2	0	0	0	0
Fixed Rate Agreement Proforma	589,392	(20,781,640)	0	(20,192,248)
Def Inc Tax Exp Total [3][4]	589,392	(20,781,640)	0	(20,192,248)
Total Change in ADIT	**279,466,161**	**1,055,987,289**	**0**	**1,335,453,449**

			(A) x (System-level balance)		(C-(D+E))				(A) x (System-level balance)		(H-(I+J))	
(A) **Amortization Rate [5]**	(B) Year (Rate Year) [6]	(C) **Beginning Year Balance**	(D) **Rate Year Excess ADIT Liabilities Amortization - 411.1 [7][8]**	(E) **Rate Year Deficient ADIT Assets Amortization - 410.1 [7][8]**	(F) **Remaining Balance**	**Gross-up Remaining Unamortized Bal. [10]**	(G) **Calendar Year**	(H) **Prior Year-End Balance**	(I) **Calendar Year Excess ADIT Liabilities Amortization - 411.1 [8]**	(J) **Calendar Year Deficient ADIT Assets Amortization – 410.1 [8]**	(K) **Year-End Balance**	**Gross-up Remaining Unamortized Bal. [10]**
3.57%	Year 1 (June 20 – May 21)	1,046,230,474	37,350,427.93	0	1,008,880,046	303,620,827.02	2020	1,046,230,474	21,787,750	0	1,024,442,725	308,304,390.02
4.95%	Year 2 (June 21 - May 22)	1,008,880,046	51,788,408	0	957,091,638	288,035,189	2021	1,024,442,725	45,772,583	0	978,670,141	294,529,205
4.34%	Year 3 (June 22 – May 23)	957,091,638	45,406,403	0	911,685,235	274,370,205	2022	978,670,141	48,065,572	0	930,604,570	280,063,948

[1] The return of the protected portion of excess Federal ADIT generated by the 2017 Tax Cuts and Jobs Act will begin effective June 1, 2020 and continue using the agreed upon methodology until the balance in the Remaining Balance Column is $0.

[2] Represents Gross Up on Excess/ Deficient Deferred Income Tax balance to be returned to/ collected from customers.

[3] The Balance Sheet Only and Def Inc Tax Exp sections do not affect OATT rate base or the OATT revenue requirement. These sections are provided for Order 864 compliance purposes only.

[4] Balance adjusted to add back EDIT related to fixed rate wholesale PPAs.

[5] Represents the estimated amortization rate using the Average Rate Assumption Method ("ARAM") rate per DEP's PowerTax system. Revised ARAM rates are calculated each year. DEP will use the best available ARAM rate when setting the annual billing rate each year. The "best available" ARAM means the ARAM rate based on the last filed final Federal Corporate Income tax return, after all permitted Federal extensions for DEP, as of the date of the posting of the Annual Update, prior to the start of the Annual Update review process. An updated schedule reflecting the revised ARAM rate will be provided each year as part of each annual update.

[6] The total number of years necessary for the return of the Protected portion of excess federal ADIT to customers will be determined by the ARAM rate, which will change over time.

[7] The goal is to return the wholesale load ratio share of the total protected portion of the excess deferred taxes, initially determined to be ($1,046,230,474) over the appropriate period using ARAM. This amount will be determined annually by multiplying ($1,046,230,474) by the ARAM rate from column (A). This amount will not be impacted by the gross-up factor nor the net plant allocator used to determine the actual amount returned to customers annually.

[8] Note, amortization for the first year of the EDIT return will reflect the initial start date of June 1, 2020 with 7 months of amortization recognized in year 1. Deficient Deferred Income Tax Assets for all years will be amortized to account 410.1. Excess Deferred Income Tax Liabilities for all years will be amortized to account 411.1. The ADIT source account for amortization is determined based on the proportion of the ADIT balance that was transferred to the "EDIT Liability Total" row. All subsequent calendar years post Year 1 will also reflect the 7-month/5-month in the calculation of Columns (I) and (J) for the "Calendar Year Remaining Balances" in Column (K).

[9] Amounts reported on this schedule reflect activity to the originating ADIT account. Reverse the sign to determine activity to the offsetting account (e.g., a Debit to account 282, would be offset with a Credit to 254).

[10] Unamortized Gross-up balance is subject to future changes in corporate income tax rate, which may change the unamortized gross-up amounts. DEP will calculate the Gross-up on the Remaining Unamortized Balance using the current deferred income tax rate as part of the annual update file each May.

DUKE ENERGY PROGRESS, LLC

OATT Transmission Rate Formula Support

Unprotected PP&E Federal Excess Deferred Tax Worksheet[1]

	Dr./(Cr.)	*Dr./(Cr.)*	*Dr./(Cr.)*	*Dr./(Cr.)*
	190	**282**	**283**	**Total**
Pre-Remeasurement ADIT	0	(1,049,725,042)	0	(1,049,725,042)
Post Remeasurement ADIT	118,392,286	(657,129,584)	0	(538,737,298)
ADIT Remeasurement	118,392,286	392,595,458	0	510,987,744
Offset (Dr.)/Cr. [6]	*Dr./(Cr.)*	*Dr./(Cr.)*	*Dr./(Cr.)*	*Dr./(Cr.)*
TCJA Remeasurement	**190**	**282**	**283**	**Total**
182.3 (Excluding Gross Up)	0	0	0	0
254 Gross Up [2]	118,392,286	0	0	118,392,286
Balance Sheet Only Total [3]	**118,392,286**	**0**	**0**	**118,392,286**
Deferred Debit	*0*	*0*	*0*	*0*
Deferred Credit	*0*	*0*	*0*	*0*
182.3	0	0	0	0
Deferred Debit	*0*	*590,863,391*	*0*	*590,863,391*
Deferred Credit	*0*	*(198,267,933)*	*0*	*(198,267,933)*
254	0	392,595,458	0	392,595,458
Fixed Rate Agreement Proforma	0	7,726,208	0	7,726,208
EDIT Liability Total [4]	**0**	**400,321,666**	**0**	**400,321,666**
Debit	*0*	*0*	*0*	*0*
Credit	*0*	*0*	*0*	*0*
411.2	0	0	0	0
Fixed Rate Agreement Proforma	0	(7,726,208)	0	(7,726,208)
Def Inc Tax Exp Total [3][4]	0	(7,726,208)	0	(7,726,208)
Total Change in ADIT	**118,392,286**	**392,595,458**	**0**	**510,987,744**

			(A) x (System-level balance)		(C-(D+E))					(A) x (System-level balance)		(H-(I+J))	
(A)	**(B)**	**(C)**	**(D)**	**(E)**	**(F)**	**Gross-up**	**(G)**	**(H)**	**(I)**	**(J)**	**(K)**	**Gross-up**
Amortization Rate	**Year (Rate Year)**	**Balance**	**Excess ADIT Liabilities Amortization - 411.1 [5]**	**Deficient ADIT Assets Amortization - 410.1 [5]**	**Balance**	**Unamortized Bal. [7]**	**Calendar Year**	**Balance**	**Excess ADIT Liabilities Amortization - 411.1 [5]**	**Deficient ADIT Assets Amortization - 410.1 [5]**	**Balance**	**Unamortized Bal. [7]**
5.00%	Year 1 (June 20 - May 21)	400,321,666	20,016,083	0	380,305,583	114,452,353	2020	400,321,666	11,676,049	0	388,645,618	116,962,273
5.00%	Year 2 (June 21 - May 22)	380,305,583	20,016,083	0	360,289,500	108,428,545	2021	388,645,618	20,016,083	0	368,629,534	110,938,465
5.00%	Year 3 (June 22 - May 23)	360,289,500	20,016,083	0	340,273,416		2022	368,629,534	20,016,083	0	348,613,451	
5.00%	Year 4 (June 23 - May 24)	340,273,416	20,016,083	0	320,257,333		2023	348,613,451	20,016,083	0	328,597,368	
5.00%	Year 5 (June 24 - May 25)	320,257,333	20,016,083	0	300,241,250		2024	328,597,368	20,016,083	0	308,581,284	
5.00%	Year 6 (June 25 - May 26)	300,241,250	20,016,083	0	280,225,166		2025	308,581,284	20,016,083	0	288,565,201	
5.00%	Year 7 (June 26 - May 27)	280,225,166	20,016,083	0	260,209,083		2026	288,565,201	20,016,083	0	268,549,118	
5.00%	Year 8 (June 27 - May 28)	260,209,083	20,016,083	0	240,193,000		2027	268,549,118	20,016,083	0	248,533,034	
5.00%	Year 9 (June 28 - May 29)	240,193,000	20,016,083	0	220,176,916		2028	248,533,034	20,016,083	0	228,516,951	
5.00%	Year 10 (June 29 - May 30)	220,176,916	20,016,083	0	200,160,833		2029	228,516,951	20,016,083	0	208,500,868	
5.00%	Year 11 (June 30 - May 31)	200,160,833	20,016,083	0	180,144,750		2030	208,500,868	20,016,083	0	188,484,784	
5.00%	Year 12 (June 31 - May 32)	180,144,750	20,016,083	0	160,128,666		2031	188,484,784	20,016,083	0	168,468,701	
5.00%	Year 13 (June 32 - May 33)	160,128,666	20,016,083	0	140,112,583		2032	168,468,701	20,016,083	0	148,452,618	
5.00%	Year 14 (June 33 - May 34)	140,112,583	20,016,083	0	120,096,500		2033	148,452,618	20,016,083	0	128,436,535	
5.00%	Year 15 (June 34 - May 35)	120,096,500	20,016,083	0	100,080,417		2034	128,436,535	20,016,083	0	108,420,451	
5.00%	Year 16 (June 35 - May 36)	100,080,417	20,016,083	0	80,064,333		2035	108,420,451	20,016,083	0	88,404,368	
5.00%	Year 17 (June 36 - May 37)	80,064,333	20,016,083	0	60,048,250		2036	88,404,368	20,016,083	0	68,388,285	
5.00%	Year 18 (June 37 - May 38)	60,048,250	20,016,083	0	40,032,167		2037	68,388,285	20,016,083	0	48,372,201	
5.00%	Year 19 (June 38 - May 39)	40,032,167	20,016,083	0	20,016,083		2038	48,372,201	20,016,083	0	28,356,118	
5.00%	Year 20 (June 39 - May 40)	20,016,083	20,016,083	0	0		2039	28,356,118	20,016,083	0	8,340,035	
							2040	8,340,035	8,340,035	0	0	

[1] The unprotected PPE portion of excess federal ADIT generated by the 2017 Tax Cuts and Jobs Act will be returned to customers over a 20-year period, effective June 1, 2020.

[2] Represents Gross Up on Excess/ Deficient Deferred Income Tax balance to be returned to/ collected from customers.

[3] The Balance Sheet Only and Def Inc Tax Exp sections do not affect OATT rate base or the OATT revenue requirement. These sections are provided for Order 864 compliance purposes only.

[4] Balance adjusted to add back EDIT related to fixed rate wholesale PPAs.

[5] Note, amortization for the first year of the EDIT return will reflect the initial start date of June 1, 2020 with 7 months of amortization recognized in year 1. Deficient Deferred Income Tax Assets for all years will be amortized to account 410.1. Excess Deferred Income Tax Liabilities for all years will be amortized to account 411.1. The ADIT source account for amortization is determined based on the proportion of the ADIT balance that was transferred to the "EDIT Liability Total" row.

[6] Amounts reported on this schedule reflect activity to the originating ADIT account. Reverse the sign to determine activity to the offsetting account (e.g., a Debit to account 282, would be offset with a Credit to 254).

[7] Unamortized Gross-up balance is subject to future changes in corporate income tax rate, which may change the unamortized gross-up amounts. DEP will calculate the Gross-up on the Remaining Unamortized Balance using the current deferred income tax rate as part of the annual update file each May.

DUKE ENERGY PROGRESS, LLC
OATT Transmission Rate Formula Support
Unprotected Non-PP&E Federal Deficient Deferred Tax Worksheet[1]

	Dr./(Cr.)	*Dr./(Cr.)*	*Dr./(Cr.)*	*Dr./(Cr.)*
	190	**282**	**283**	**Total**
Pre-Remeasurement ADIT	2,066,852,961	(242,309,564)	(1,827,226,592)	(2,683,194)
Post Remeasurement ADIT	1,323,249,581	(152,017,324)	(1,109,073,087)	62,159,170
ADIT Remeasurement	(743,603,380)	90,292,239	718,153,505	64,842,364
Offset (Dr.)/Cr. [7]	*Dr./(Cr.)*	*Dr./(Cr.)*	*Dr./(Cr.)*	*Dr./(Cr.)*
TCJA Remeasurement	**190**	**282**	**283**	**Total**
182.3 (Excluding Gross Up)	0	73,840,796	77,899,585	151,740,381
253 (Excluding Gross Up)[2]	(1,086,307)	0	0	(1,086,307)
254 (Excluding Gross Up)	(85,761,549)	(12,918,099)	0	(98,679,648)
254 Gross Up [3]	(1,747,691)	0	0	(1,747,691)
Balance Sheet Only Total [4]	**(88,595,547)**	**60,922,697**	**77,899,585**	**50,226,735**
Deferred Debit	*0*	*0*	*0*	*0*
Deferred Credit	*0*	*0*	*0*	*0*
182.3	0	0	0	0
Deferred Debit	*4,322,788*	*0*	*659,906,852*	*664,229,640*
Deferred Credit	*(637,753,207)*	*0*	*(32,271,875)*	*(670,025,082)*
254	(633,430,419)	0	627,634,978	(5,795,442)
Fixed Rate Agreement Proforma	(12,465,797)	0	12,351,744	(114,053)
EDIT Liability Total [5]	**(645,896,216)**	**0**	**639,986,722**	**(5,909,495)**
Debit	*(21,952,019)*	*(14,166,901)*	*(642,203)*	*(36,761,123)*
Credit	*374,605*	*43,536,443*	*13,261,145*	*57,172,194*
411.2	(21,577,414)	29,369,542	12,618,942	20,411,071
Fixed Rate Agreement Proforma	12,465,797	0	(12,351,744)	114,053
Def Inc Tax Exp Total [4][5]	**(9,111,617)**	**29,369,542**	**267,198**	**20,525,124**
Total Change in ADIT	**(743,603,380)**	**90,292,239**	**718,153,505**	**64,842,364**

			(A) x (System-level balance)		(C-(D+E))					(A) x (System-level balance)		(H-(I+J))	
(A)	**(B)**	**(C)**	**(D)**	**(E)**	**(F)**	**Gross-up**	**(G)**	**(H)**	**(I)**	**(J)**	**(K)**	**Gross-up**
Amortization		**Beginning Year**	**Rate Year**	**Rate Year**	**Remaining**	**Remaining**		**Prior Year-End**	**Calendar Year**	**Calendar Year**	**Year-End**	**Remaining**
Rate	**Year (Rate Year)**	**Balance**	**Excess ADIT Liabilities Amortization - 411.1 [6]**	**Deficient ADIT Assets Amortization - 410.1 [6]**	**Balance**	**Unamortized Bal. [8]**	**Calendar Year**	**Balance**	**Excess ADIT Liabilities Amortization - 411.1 [6]**	**Excess ADIT Assets Amortization - 410.1 [6]**	**Balance**	**Unamortized Bal. [8]**
20.00%	Year 1 (June 20 - May 21)	(5,909,495)	(1,181,899)	0	(4,727,596)	(1,422,762)	2020	(5,909,495)	(689,441)	0	(5,220,054)	(1,570,967)
20.00%	Year 2 (June 21 - May 22)	(4,727,596)	(1,181,899)	0	(3,545,697)	(1,067,072)	2021	(5,220,054)	(1,181,899)	0	(4,038,155)	(1,215,276)
20.00%	Year 3 (June 22 - May 23)	(3,545,697)	(1,181,899)	0	(2,363,798)		2022	(4,038,155)	(1,181,899)	0	(2,856,256)	
20.00%	Year 4 (June 23 - May 24)	(2,363,798)	(1,181,899)	0	(1,181,899)		2023	(2,856,256)	(1,181,899)	0	(1,674,357)	
20.00%	Year 5 (June 24 - May 25)	(1,181,899)	(1,181,899)	0	0		2024	(1,674,357)	(1,181,899)	0	(492,458)	
							2025	(492,458)	(492,458)	0	0	

[1] The unprotected non-PPE portion of deficient federal ADIT generated by the 2017 Tax Cuts and Jobs Act will be collected from customers over a 5-year period, effective June 1, 2020.

[2] FERC account 253 held a gross-up of excess North Carolina deferred income taxes and at 12/31/17 the balance was remeasured from 35% to 21%.

[3] Represents Gross Up on Excess/ Deficient Deferred Income Tax balance to be returned to/ collected from customers.

[4] The Balance Sheet Only and Def Inc Tax Exp sections do not affect OATT rate base or the OATT revenue requirement. These sections are provided for Order 864 compliance purposes only.

[5] Balance adjusted to add back EDIT related to fixed rate wholesale PPAs.

[6] Note, amortization for the first year of the deficient federal ADIT will reflect the initial start date of June 1, 2020 with 7 months of collection recognized in year 1. Deficient Deferred Income Tax Assets for all years will be amortized to account 410.1. Excess Deferred Income Tax Liabilities for all years will be amortized to account 411.1. The ADIT source account for amortization is determined based on the proportion of the ADIT balance that was transferred to the "EDIT Liability Total" row.

[7] Amounts reported on this schedule reflect activity to the originating ADIT account. Reverse the sign to determine activity to the offsetting account (e.g., a Debit to account 282, would be offset with a Credit to 254).

[8] Unamortized Gross-up balance is subject to future changes in corporate income tax rate, which may change the unamortized gross-up amounts. DEP will calculate the Gross-up on the Remaining Unamortized Balance using the current deferred income tax rate as part of the annual update file each May.

Exhibit DEP - 2

Attachment F

Year Ending 12/31/2019

Duke Energy Progress, LLC
OATT Template - Generic - [Return/ Collection of Future Excess Deficient] Deferred Taxes -
[Protected/Unprotected PPE/ Unprotected Non-PPE] Portion

	Dr./(Cr.)	*Dr./(Cr.)*	*Dr./(Cr.)*	*Dr./(Cr.)*	*Dr./(Cr.)*
	190	**282**	**283**	**XXX [1]**	**Total**
Pre-Remeasurement ADIT Balance					-
Post Remeasurement ADIT Balance					-
ADIT Remeasurement	-	-	-	-	-
Offset (Dr.)/Cr.	*Dr./(Cr.)*	*Dr./(Cr.)*	*Dr./(Cr.)*	*Dr./(Cr.)*	*Dr./(Cr.)*
Income Tax Remeasurement	**190**	**282**	**283**	**XXX [1]**	**Total**
182.3 (Excluding Gross Up)	-				-
254 (Excluding Gross Up)					-
254 Gross Up					-
Balance Sheet Only Total	**-**	**-**	**-**	**-**	**-**
					-
Deferred Debit					
Deferred Credit					-
182.3	-	-	-		-
Deferred Debit					-
Deferred Credit					-
254	-	-	-		-
Excess/ Deficient DIT Total[2]	**-**	**-**	**-**		**-**
Debit					-
Credit					-
Account XXX [1]					XX
Def Inc Tax Exp Total	-	-	-	-	-
Total Change in ADIT	-	-	-	-	-

			(A) x (System-level balance)		**(C-(D+E))**				**(A) x (System-level balance)**			**(H-(I+J))**	
(A)	**(B)**	**(C)**	**(D)**	**(E)**	**(F)**	**Gross-up**	**(G)**	**(H)**	**(I)**	**(J)**	**(K)**	**Gross-up**
Amortization		**Beginning year**	**Rate year**	**Rate year**	**Remaining**	**Remaining**	**Calendar**	**Prior Year-End**	**Calendar Year**	**Calendar Year**	**Year-End**	**Remaining**
Rate[3]	Year (Rate Year)	**balance**	**Excess ADIT Liabilities Amortization - 411.1 [4]**	**Deficient ADIT Assets Amortization - 410.1 [4]**	**Balance**	**Unamortized Bal.**	**Year**	**Balance**	**Excess ADIT Liabilities Amortization - 411.1 [4]**	**Deficient ADIT Assets Amortization - 410.1 [4]**	**Balance**	**Unamortized Bal.**
	Year 1 (June 20xx - May 20xx+1)						20XX					
	Year 2 (June 20xx+1 - May 20xx+2)						20XX+1					

[1] Account will be populated with the account remeasured as a result of the Federal or State tax rate change and the amount will be the excess or deficient ADIT contained therein.

[2] The *[Protected/Unprotected PPE/Unprotected Non-PPE]* portion of *[excess/deficient]* ADIT generated by *[Insert Name of Federal or State Tax Law]* will be returned to or collected from customers over a [X] year period, effective [Insert Date]. The amortization period for unprotected excess or deficient ADIT will be no longer than a reasonable estimate of the average remaining lives of the underlying assets. If a future tax rate change requires the collection of deficient ADIT from customers, the amortization period will reasonably balance the [Company's] need to fund the tax liability against rate shock to customers. If the future tax rate change requires return of excess ADIT to customers, the amortization period will reasonably balance the benefits of returning excess ADIT to customers with the [Company's] cash flow and credit risks.

[3] The total number of years necessary for the *[return of the Protected portion of excess ADIT]* or *[recovery of the Protected portion of deficient ADIT]* to customers will be determined by the ARAM rate, which will change over time, or a methodology consistent with the tax normalization rules in place at the time of the tax rate change.

[4] Deficient Deferred Income Tax Assets for all years will be amortized to account 410.1. Excess Deferred Income Tax Liabilities for all years will be amortized to account 411.1

DUKE ENERGY PROGRESS, LLC
Transmission Formula Rate Support
Account 454 Reconciliation - Rents

	Amount	Allocation [2] Type	Factor	OATT Amt
NORTH CAROLINA [1]				
TOTAL NORTH CAROLINA	0			0
SOUTH CAROLINA [1]				
TOTAL SOUTH CAROLINA	0			0
NON DESIGNATED [1]				
TOTAL NON DESIGNATED	0			0
TOTAL	0			0

Notes:

[1]: Lines added as needed to accommodate all separately-listed items.

[2]: Types of Allocation Factors can include, but are not limited to, “Labor”, “Trans”, “Prod”, “Dist” and “Other”.

DUKE ENERGY PROGRESS, LLC

Transmission Rate Formula Support - Account 456.1 Revenue Credits

Form 1 Reference [1]	Payment by (Column (b))	Classification (Col (d))	Rate Schedule (Col (e))	Transmission Revenue (Col (k))	Ancillary/Other Revenue (Col (m))	Total Revenue (Col (n))
	Total Per Form-1			0	0	0
	STF/NF Revenues					
	Plus: Other Transmission revenues from wholesale service not included as loads reported on FERC Form 1, Page 400, columns (f) and (g). Source: Company Records.			0		
	Net Transmission Rate Revenue Credit			0		

Notes:

[1]: Lines added as needed to accommodate all separately-listed items.

DUKE ENERGY PROGRESS, LLC
Transmission Formula Rate Support
Account 456 Reconciliation - Other Revenue

Description [1]	**Amount**	**Allocation Type**	**Factor**	**OATT Amt**
Total Other Revenue 456 (ties to p 300.21.b)	0			0

Notes:

[1]: Lines added as needed to accommodate all separately-listed items. Each line item will also include detail account number.

DUKE ENERGY PROGRESS, LLC

Transmission Rate Formula Support - Year End CWIP for Identified Projects

Project No. [1]	**Description**	**12/31/yyyy CWIP**
	Total All Identified Projects	**0**

Notes:

[1]: Lines added as needed to accommodate all separately-listed items. Each line item will also include project classification, for example, “GR-51” and “GR-52”.

DUKE ENERGY PROGRESS, LLC
Transmission Rate Formula Support - Customer Prepayments for Network Upgrades Detail

NCEMC Anson Co. Project - Closed to Plant in Service June 2007

Balances as of Beginning of Refund Period:

	Cash Payments	Accrued Interest	Total Liability	Memo: AFUDC Booked
Balance at Closing	0	0	0	
Adj. – Payment after Close	0	-	0	
Adjusted Balance	0	0	0	411,779
Allocation of Balance Refunds:	0	0		

Test Year Refund History:

		Allocation of Amount Refunded			
Service Month	Amount Refunded	Current Interest	Cash Prepayment	Accrued Interest	Ending Liability Balance
Jan – yyyy	0	0	0	0	0
Feb – yyyy	0	0	0	0	0
Mar – yyyy	0	0	0	0	0
Apr – yyyy	0	0	0	0	0
May – yyyy	0	0	0	0	0
Jun – yyyy	0	0	0	0	0
Jul – yyyy	0	0	0	0	0
Aug – yyyy	0	0	0	0	0
Sept – yyyy	0	0	0	0	0
Oct – yyyy	0	0	0	0	0
Nov – yyyy	0	0	0	0	0
Dec – yyyy	0	0	0	0	0
Total	0	0	0	0	0
			0	0	0
=== > Interest Disbursed:	0	0		0	
Allocation of Ending Balance:			0	0	0

AFUDC Reversal

Project Investment by FERC Account

352	353	354	355	356	Total
8.69%	84.68%	0.29%	2.69%	3.64%	100.00%

Depreciation Rates:

Effective Date	352	353	354	355	356	Composite	Net AFUDC Reversal*
4/1/2004	1.72%	1.71%	1.43%	5.13%	3.31%	1.86%	38,623
7/1/2012	1.76%	1.88%	1.16%	1.95%	1.22%	1.85%	44,009
3/16/2018**	0.00%	0.00%	0.00%	0.00%	0.00%	0.00%	0
mm/dd/yy**	0.00%	0.00%	0.00%	0.00%	0.00%	0.00%	0

Total AFUDC Reversed (Sum of Above Depreciation from In-Service thru Year Ending 12/31/yyyy) 0

Net AFUDC Remaining as Rate Base Offset = MAX (411,779 -Total AFUDC Reversed, 0) 0

* Applicable Composite Rate x Length of Time that Composite Rate Has Been Applicable x Original AFUDC accrued
** Note: Applicable Depreciation Rates per DEP Rate Schedule No. 199 as it may change from time to time.

DUKE ENERGY PROGRESS, LLC
Transmission Rate Formula Support - Customer Prepayments for Network Upgrades Detail

NCEMC Richmond Co. Project - Closed to Plant in Service December 2007

Balances as of Beginning of Refund Period:

	Cash Payments	Accrued Interest	Total Liability	Memo: AFUDC Booked
Balance per prior year formula	0	0	0	
Adj. – Payment after Close **	0		0	
Adjusted Balance	0	0	0	1,081,205
Allocation of Balance Refunds:	0	0		

Test Year Refund History:

		Allocation of Amount Refunded			
Service Month	Amount Refunded	Current Interest	Cash Prepayment	Accrued Interest	Ending Liability Balance
Jan – yyyy	0	0	0	0	0
Feb – yyyy	0	0	0	0	0
Mar – yyyy	0	0	0	0	0
Apr – yyyy	0	0	0	0	0
May – yyyy	0	0	0	0	0
Jun – yyyy	0	0	0	0	0
Jul – yyyy	0	0	0	0	0
Aug – yyyy	0	0	0	0	0
Sept – yyyy	0	0	0	0	0
Oct – yyyy	0	0	0	0	0
Nov – yyyy	0	0	0	0	0
Dec – yyyy	0	0	0	0	0
Total	0	0	0	0	0
==> Interest Disbursed:	0	0		0	
Allocation of Ending Balance:			0	0	0

AFUDC Reversal Calculation:

Project Investment by FERC Account:

352	353	354	355	356	Total
5.22%	37.76%	0.00%	18.56%	38.46%	100.00%

Depreciation Rates:

Effective Date	352	353	354	355	356	Composite	Net AFUDC Reversal*
4/1/2004	1.72%	1.71%	1.43%	5.13%	3.31%	2.96%	145,377
7/1/2012	1.76%	1.88%	1.16%	1.95%	1.22%	1.63%	102,251
3/16/2018**	0.00%	0.00%	0.00%	0.00%	0.00%	0.00%	0
mm/dd/yy**	0.00%	0.00%	0.00%	0.00%	0.00%	0.00%	0

Total AFUDC Reversed (Sum of Above Depreciation from In-Service thru Year Ending 12/31/yyyy) 0

Net AFUDC Remaining as Rate Base Offset = MAX (1,081,205 – Total AFUDC Reversed, 0) 0

*Applicable Composite Rate x Length of Time that Composite Rate Has Been Applicable x Original AFUDC accrued

**Note: Applicable Depreciation Rates per DEP Rate Schedule No. 199 as it may change from time to time.

DUKE ENERGY PROGRESS, LLC

Transmission Rate Formula Support - Interconnection Facilities [1]
Generation In-Service After March 15, 2000 per FERC Order 2003

Project [2]	Balance
Total Interconnection Facilities	0

[1] - Excludes Step-up Transformers accounted for on DEP-2, page 4, line 2
[2] - Lines added as needed to accommodate all separately-listed items.

DUKE ENERGY PROGRESS, LLC

Transmission Rate Formula Support – List of Inputs from FERC Form-1

Line	Page	Row	Column	Description	Reference	FF1 Amount	Adjustment [1]	Value (FF1 +) Adjustment	Adjustment Comment [2]
1	111	57	c	Prepayments	111.57.c				
2	111	81	c	Loss on Reacquired Debt	111.81.c				
3	112	3	c	Preferred Stock Issued	112.3.c				
4	112	12	c	Account 216.1	112.12.c				
5	112	16	c	Proprietary Capital	112.16.c				
6	112	24	c	Long Term Debt	112.24.c				
7	112	28	c	Accum. Provision for Injuries & Damages	112.28.c				
8	112	29	c	Accum. Provision for Pensions & Benefits	112.29.c				
9	112	30	c	Accum. Misc Operating Provisions	112.30.c				
10	113	61	c	Gain on Reacquired Debt	113.61.c				
11	117	62-66	c	Long Term Interest Expense	117.62-66.c				
12	118	29	c	Preferred Dividends (positive)	118.29.c				
13	200	21	c	Intangible Amort. Reserve	200.21.c				
14	205	5	g	Intangible Plant	205.5.g				
15	205	46	g	Production Plant	205.46.g				
16	207	58	g	Transmission Plant	207.58.g				
17	207	75	g	Distribution Plant	207.75.g				
18	207	99	g	General Plant	207.99.g				
19	214	47	d	Plant Held for Future Use (Trans. Only)	214.47.d				
20	219	20-24	c	Production Depr. Reserve	219.20-24.c				
21	219	25	c	Transmission Depr. Reserve	219.25.c				
22	219	26	c	Distribution Depr. Reserve	219.26.c				
23	219	28	c	General Depr. Reserve	219.28.c				
24	227	5 (assigned) &8	c	M&S - Transmission	227.5 (assigned)&8.c				
25	227	16	c	M&S - Stores Expense	227.16.c				
26	232	3	f	SFAS 158 Regulatory Assets	232.3.f				
27	234	8	c	ADIT - 190	234.8.c				
28	263	3&5	i	Other Taxes - FICA/Fed. Unemployment	263.3&5.i				
29	263	4	i	Other Taxes - Highway Use	263.4.i				
30	263	10&19	i	Other Taxes - Real & Personal Property	263.10&19.i				
31	263	12&21	i	Other Taxes - State Unemployment	263.12&21.i				
32	266	8	f	Amortized ITC (Negative)	266.8.f				
33	273	8	k	ADIT - 281 (Negative)	273.8.k				
34	275	2	k	ADIT - 282 (Negative)	275.2.k				
35	277	9	k	ADIT - 283 (Negative)	277.9.k				
36	321	85-88	b	(561.1-561.4) Transmission Expense	321.85-88.b				
37	321	96	b	(565) Transmission of Electricity by Others	321.96.b				
38	321	98	b	(567) Rents (Network Cust Credits)	321.98.b				
39	321	112	b	TOTAL Transmission Expenses	321.112.b				
40	323	185	b	(924) Property Insurance	323.185.b				
41	323	189	b	(928) Regulatory Commission Expenses	323.189.b				
42	323	191	b	(930.1) General Advertising Expenses	323.191.b				
43	323	197	b	Total Admin & General Expenses	323.197.b				
44	335	1-3&23	b	Industry Dues, R&D, C-V Nuc Pwr Assoc (Subtracted from A&G)	335.1-3&23.b				
45	336	1	f	Intangible Amortization	336.1.f				
46	336	7	b	Transmission Depr. Expense	336.7.b				
47	336	10	b	General Depr. Expense	336.10.b				
48	350	12	b	FERC Order 641 Annual Charges	350.12.b				
49	354	21	b	Transmission O&M Labor	354.21.b				
50	354	27	b	A&G Labor	354.27.b				
51	354	28	b	Total Direct Payroll - O&M Labor	354.28.b				
52	400	17	b	Sum of Monthly Transmission Peaks	400.17.b				
53	400	17	e	Firm Network Service for Self	400.17.e				
54	400	17	f	Firm Network Service for Others	400.17.f				
55	400	17	g	Long-Term Firm PTP Reservations	400.17.g				
56	400	17	h	Other Long-Term Firm Service	400.17.h				
57	400	17	i	Short-Term Firm PTP Reservations	400.17.i				

[1]: The Adjustments column provides for adjustments to Form 1 amounts, based on the application of clearly identified and supported information, to ensure that the correct amount is billed.

[2]: Describe each adjustment as necessary.

DUKE ENERGY PROGRESS, LLC

Transmission Rate Formula Support

Deferred Income Tax Balances - GL A/C 190

Item [1]	Balance Per Form 1 12/31/yyyy Dr(Cr)	Adjustment [2]	Allocation [3] Type	Factor	**OATT Amt**	Comment
GL 190 - Electric	0				0	

Notes:

[1]: Lines added as needed to accommodate all separately-listed items.

[2]: The Adjustments column provides for adjustments to Form 1 amounts, based on the application of clearly identified and supported information, to ensure that the correct amount is billed.

[3]: Types of Allocation Factors can include, but are not limited to, “Labor”, “Prod”, “NP” and “Other”.

DUKE ENERGY PROGRESS, LLC
Transmission Rate Formula Support
Deferred Income Tax Balances - GL A/C 282

Item 1	Balance Per Form 1 12/31/yyyy Dr(Cr)	Adjustment [2]	Allocation [3] Type	Factor	**OATT Amt**	Comment
Total GL 282	0				0	

Notes:

[1]: Lines added as needed to accommodate all separately-listed items.

[2]: The Adjustments column provides for adjustments to Form 1 amounts, based on the application of clearly identified and supported information, to ensure that the correct amount is billed.

[3]: Types of Allocation Factors can include, but are not limited to, “Labor”, “TP”, “Prod”, “NP” and “Other”.

DUKE ENERGY PROGRESS, LLC
Transmission Rate Formula Support
Deferred Income Tax Balances - GL A/C 283

Item [1]	Balance Per Form 1 12/31/yyyy Dr(Cr)	Adjustment [2]	Allocation [3] Type	Factor	**OATT Amt**	Comment
Total GL 283	0				0	

Notes:

[1]: Lines added as needed to accommodate all separately-listed items.

[2]: The Adjustments column provides for adjustments to Form 1 amounts, based on the application of clearly identified and supported information, to ensure that the correct amount is billed.

[3]: Types of Allocation Factors can include, but are not limited to, “Labor”, “Prod” and “Other”.

DUKE ENERGY PROGRESS, LLC

Transmission Rate Formula Support

Accumulated Misc. Operating Provision Balances - GL A/C 228.4

Item [1]	Balance Per Form 1 12/31/yyyy Dr(Cr)	Adjustment [2]	Allocation [3] Type	Factor	**OATT Amt**	Comment
Total GL 228.4	0				0	

Depreciation Rates by FERC Account are listed in DEP Rate Schedule No. 199

Notes:

[1]: Lines added as needed to accommodate all separately-listed items.

[2]: The Adjustments column provides for adjustments to Form 1 amounts, based on the application of clearly identified and supported information, to ensure that the correct amount is billed.

[3]: Types of Allocation Factors can include, but are not limited to, “Labor”, “Prod” and “Other”.

DUKE ENERGY PROGRESS, LLC
PREPAYMENTS FOR NETWORK UPGRADES - HYPOTHETICAL EXAMPLES

252 Customer advances for construction.

This account shall include advances by customers for construction which are to be refunded either wholly or in part. When a customer is refunded the entire amount to which he is entitled, according to the agreement or rule under which the advance was made the balance, if any, remaining in this account shall be credited to the respective plant account.

EXAMPLE

NETWORK UPGRADE COST		$1,000,000
DEPRECIABLE LIFE		40-YRS
ANNUAL FERC INTEREST RATE	ANNUALLY	6%
REFUND OVER 5 -YRS	ANNUALLY	$200,000

SCENARIO 1:

YEAR OF IN-SERVICE:

DESCRIPTION	FERC	DEBIT	CREDIT
ELEC. PLNT IN-SVC	101	$1,000,000	
CUSTOMER ADVANCES	252		$1,000,000

1st REFUND:

DESCRIPTION	FERC	DEBIT	CREDIT
CASH	130		$260,000
CUSTOMER ADVANCES	252	$ 200,000	
INTEREST EXP	431	$60,000	

	RATE BASE	**EXPENSE**
FORMULA INPUT - EPIS $_{YR-1}$	**$ 1,000,000**	
BEGINNING BAL.	$(1,000,000)	
INTEREST EXPENSE $_{YR-1}$	$ (60,000)	$60,000
REFUND $_{YR-1}$	$260,000	
FORMULA INPUT $_{YR-1}$	**$(800,000)**	**$60,000**
FORMULA INPUT - EPIS $_{YR-2}$	**$ 1,000,000**	
FORMULA ACCUM. DEP $_{YR-2}$	**$ (25,000)**	
BEGINNING BAL.	$(800,000)	
INTEREST EXPENSE $_{YR-2}$	$ (48,000)	$48,000
REFUND $_{YR-2}$	$248,000	
FORMULA INPUT $_{YR-2}$	**$ (600,000)**	**$48,000**

SCENARIO 2:
RECOVERY OF INTEREST: PER AGREEMENT WITH CUSTOMERS, INTEREST WILL BE RECOVERED UPON PAYMENT AND NOT AS ACCRUED. THIS WILL CREATE A REGULATORY ASSET TO RECOGNIZE THE DEFERRED COST RECOVERY.

YEAR OF IN-SERVICE:

DESCRIPTION	FERC	DEBIT	CREDIT
ELEC. PLNT IN-SVC	101	$1,000,000	
CUSTOMER ADVANCES	252		$1,000,000

YR-1 NO REFUND:

DESCRIPTION	FERC	DEBIT	CREDIT
CUSTOMER ADVANCES	252		$60,000
INTEREST ACCRUED	431	$60,000	
REG ASSET (INTEREST ACCRUED)	182.3	$60,000	
INTEREST ACCRUED DEFERRAL	407.4		$ 60,000

YR-5 WITH REFUND:

DESCRIPTION	FERC	DEBIT	CREDIT
CUSTOMER ADVANCES	252	$1,338,226	
CASH	131		$1,338,226
REG ASSET (INTEREST ACCRUED)	182.3		$338,226
INTEREST ACCRUED DEFERRAL	407.3	$338,226	

	RATE BASE	**EXPENSE**
IF NOT REFUNDED UNTIL YR 5, THAN:		
BEGINNING BAL.	$(1,000,000)	
INTEREST ACCRUED $_{YR-1}$	$ (60,000)	$ (60,000)
REG. ASSET (INTEREST ACCRUED) $_{YR-1}$	$60,000	$60,000
FORMULA INPUT $_{YR-1}$	**$ 1,000,000)**	**$**
INTEREST ACCRUED $_{YR-2}$	$ (63,600)	$ (63,600)
REG. ASSET (INTEREST ACCRUED) $_{YR-2}$	$63,600	$63,600
FORMULA INPUT $_{YR-2}$	**$(1,000,000)**	**$**
INTEREST ACCRUED $_{YR-3}$	$ (67,416)	$ (67,416)
REG. ASSET (INTEREST ACCRUED) $_{YR-3}$	$ 67,416	$67,416
FORMULA INPUT $_{YR-3}$	**$(1,000,000)**	**$ -**
INTEREST ACCRUED $_{YR-4}$	$ (71,461)	$(71,461)
REG. ASSET (INTEREST ACCRUED) $_{YR-4}$	$ 71,461	$ 71,461
FORMULA INPUT $_{YR-4}$	**$(1,000,000)**	**$**
INTEREST ACCRUED $_{YR-5}$	$ (75,749)	$ (75,749)
REG. ASSET (INTEREST ACCRUED) $_{YR-5}$	$ 75,749	$ 75,749
REFUND $_{YR-5}$	$ 1,000,000	$ 338,226
FORMULA INPUT $_{YR-5}$	**$**	**$ 338,226**

Attachment H.2
DEP Formula Rate Implementation Protocol

DEP's OATT formula transmission rates shall be implemented in accordance with these Formula Rate Implementation Protocols ("Protocols") as set forth below:

Section 1 Annual Updates

a. The annual transmission revenue requirement and rates for transmission service derived therefrom for DEP's OATT shall be applicable to services on and after June 1 of a given calendar year[1] through May 31 of the subsequent calendar year (the "Rate Year").

b. On or before May 15th of each year, DEP, the Transmission Provider, shall recalculate its annual transmission revenue requirement and rates for transmission service, and the Transmission Provider shall produce an "Annual Update" for the upcoming Rate Year. The Transmission Provider shall:

(i) post such Annual Update on the Transmission Provider's OASIS website;

and

(ii) file such Annual Update with the FERC as an Informational Filing.

Consistent with FERC procedures concerning informational filings, the Informational Filing will not be noticed for filing and FERC need not issue an acceptance or approval of the Informational Filing for the rates to go into effect. If the Commission issues a Notice in response to the Informational Filings, the Transmission Provider shall advise the Commission of the challenge process in the Protocols and shall seek

[1] Notwithstanding Section 1.a, the commencement date of the Formula Rate in the first Rate Year of the Formula Rate shall be the effective date established by FERC.

an abeyance of the Commission proceeding to permit that challenge process to proceed.

c. If the date for making the Annual Update posting/filing should fall on a weekend or a holiday recognized by the FERC, then the posting/filing shall be due on the next business day.

d. The date on which the last of the events listed in Section 1.b. or 1.c. occurs shall be that year's "Publication Date."

e. Upon written request by any transmission customer taking service under the Tariff for the input(s) to a particular year's Annual Update, the Transmission Provider will promptly make available to such entity and/or a consultant designated by it, a "workable" Excel file containing that year's Annual Update data (by the Publication Date if so requested).

f. The Formula Rate is premised upon the following predicates: (i) the FERC's Uniform System of Accounts ("USoA"),

(ii) FERC Form No. 1[2] reporting requirements as applicable,

(iii) FERC's orders establishing generally applicable transmission ratemaking policies (including, but not limited to, FERC's policy that all charges billed under formula rates are subject to prudence challenges and after-the-fact refund), and

(iv) the Transmission Provider's accounting policies, practices and procedures that are consistent with Section 1.f.(i). above, as each of such predicates

[2] If the referenced form is superseded, the successor form(s) shall be utilized and supplemented as necessary to provide equivalent information as that provided in the superseded form. If the referenced form(s) is (are) discontinued, equivalent information as that provided in the discontinued form(s) shall be utilized.

("Fundamental Predicates") exists as of the date of the initial filing by the Transmission Provider of the Formula Rate, subject to such Fundamental Predicate(s) being changed in accordance with the procedures provided for in these Protocols or by the FERC.

g. The Transmission Provider's Annual Update for the Rate Year:

(i) shall be based upon the data properly recordable and recorded in FERC Form No. 1 for the most recent calendar year (to the extent the Formula Rate specifies Form 1 data as the input source), and, to the extent specified in the Formula Rate, be based upon the books and records of the Transmission Provider maintained in accordance with the USoA (as defined above) and other FERC accounting policies;

(ii) shall, to the extent specified in the Formula Rate, provide supporting documentation for data that is not otherwise publicly-available in the FERC Form No. 1 and that is used in the Formula Rate;[3]

(iii) shall provide notice of material changes in the Transmission Provider's accounting policies, practices and procedures from those in effect for the calendar year upon which the immediately preceding Annual Update was based ("Material Accounting Changes");[4]

---

[3] It is the intent of the Formula Rate, including the supporting explanations and allocations described therein, that each input to the Formula Rate either will be (i) taken directly from the FERC Form No. 1 or (ii) reconcilable to the FERC Form No. 1 by the application of clearly identified and supported information. Where the reconciliation is provided through a worksheet included in the filed Formula Rate template, the inputs to the worksheet must meet this transparency standard, and doing so will satisfy this transparency requirement for the amounts that are output from the worksheet and input to the main body of the Formula Rate.

[4] Such notice may incorporate by reference applicable disclosure statements filed with the Securities and Exchange Commission ("SEC").

(iv) shall be subject to review and challenge in accordance with the procedures set forth in these Protocols, to enable any interested party to verify that the input data is properly recordable and recorded, and otherwise consistent with Section 1.f(i) and the Fundamental Predicates, and that the Formula Rate has been applied according to its terms and the procedures in these Protocols (including terms and procedures related to challenges concerning consistency with and changes in Fundamental Predicates); and

(v) shall not seek to modify the Formula Rate itself and, except as provided in Section 1.h below, shall not be subject to challenge by seeking to modify the Formula Rate itself (i.e., all such modifications to the Formula Rate, such as a change in return on equity and other items specified in Section 1.j below, will require, as applicable, a Federal Power Act ("FPA") Section 205 or Section 206 filing).

h. All change(s) to the Fundamental Predicates set forth in Section 1.f., above, (other than through filings pursuant to Section 5 of these Protocols hereof that update FERC Form 1 references and do not make substantive changes to the Formula Rate), subsequent to the date specified in Section 1.f, shall warrant a re-assessment of all of the elements of the Formula Rate that are affected by the change or changes in one or more Fundamental Predicates to ensure that the Formula Rate operates together to produce a just, reasonable and not unduly discriminatory or preferential Formula Rate. If there is a change to the Fundamental Predicates that requires a change to the Formula Rate to ensure that the Formula Rate operates to produce a just, reasonable and not unduly discriminatory or preferential Formula Rate, the Transmission Provider

will effectuate the change in the Formula Rate through a filing under Federal Power Act Section 205.

i. Any interested party seeking changes in the application of the Formula Rate (including a change to the Formula Rate itself) due to a change in one or more of the Fundamental Predicates shall raise the matter with the Transmission Provider. If such changes to the application of the Formula Rate for the current Annual Update are not resolved within one hundred and twenty (120) days of the Publication Date, any interested party shall have the right to challenge such application of the Formula Rate, in the manner otherwise provided pursuant to these Protocols, due to the change(s) in such Fundamental Predicates. The final resolution of any such challenge(s), including interest calculated in accordance with 18 C.F.R. § 35.19a shall be effective on June 1 of each year affected by the resolution of the challenge.

j. Formula Rate inputs for the following components of the Formula Rate shall be considered stated values in the Formula Rate: (i) rate of return on common equity; (ii) depreciation rates; (iii) equity ratio cap in accordance with Note M in the Formula Rate; and (iv) extraordinary property losses and amortization thereof. The values used in the Formula Rate calculations for each of these components may not be changed thereafter except pursuant to an FPA Section 205 or 206 filing.

k. All data provided pursuant to and in accordance with the procedures set forth in this Attachment H.2 may be used in any challenge to the Annual Update of the Formula Rate.

l. Beginning with the Annual Update for the 2019 Rate Year (for services provided on and after June 1, 2019), the annual update of the Real Power Loss factor shall be governed by this Section 1.l. The Transmission Provider shall recalculate the Real Power Loss factor in accordance with the Methodology for Calculation of Real

Power Loss Factors set forth in Attachment W (the “Methodology”). By April 1 of the year immediately succeeding the 12-month loss factor calculation period set forth in the Methodology, the Transmission Provider shall post on its OASIS website (the “Real Power Loss Factor Posting”) the recalculated Real Power Loss factor along with supporting calculations and documentation, in a “workable” Excel file, in sufficient detail to enable interested parties to verify the accuracy of the recalculated Real Power Loss factor. The recalculated Real Power Loss factor shall be a component of and shall be incorporated into the Annual Update for all purposes under these Protocols, except that any interested party may serve information requests regarding the recalculation of the Real Power Loss factor commencing with the Real Power Loss Factor Posting..

Section 2 Annual Review Procedures

The Transmission Provider's Annual Update shall be subject to the following review procedures ("Annual Review Procedures"):

a. Each year, prior to the posting of the Annual Update, the Transmission Provider shall convene a meeting or conference call among interested parties to preview the forthcoming Annual Update ("Pre-Posting Customer Meeting"). The Pre-Posting Customer Meeting shall be held no fewer than 10 days prior to the Publication Date. At the Pre-Posting Customer Meeting, the Transmission Provider shall provide an overview of the forthcoming Annual Update, including, on an informal (i.e., non-binding) basis, as much information about the updated inputs to the Formula Rate as is available to the Transmission Provider at that time.

b. Each year, no later than thirty (30) days after the Publication Date, the Transmission Provider shall convene a meeting or conference call among interested parties ("Customer Meeting") during which the Transmission Provider shall present details about its Annual

Update. The Customer Meeting also shall provide interested parties the chance to seek information and clarifications from the Transmission Provider about the Annual Update. The location, date and time of the Customer Meeting shall be posted on the Transmission Provider's internet website on or before the Publication Date but in no event fewer than fifteen (15) days before the Customer Meeting.

c. Interested parties shall have up to ninety (90) days after each annual Publication Date (unless such period is extended with the written consent of the Transmission Provider) to serve reasonable information requests on the Transmission Provider; provided, however, that the potentially interested parties shall make a good faith effort to submit

consolidated sets of information requests that limit the number and overlap of questions to the maximum extent practicable. Such information requests shall be limited to what the submitting party believes is necessary to determine if the input data are properly recordable and recorded, consistent with Section 1.g and the procedures in this Attachment H.2, and what is necessary to determine the extent and effect(s) of changes in the Fundamental Predicates. In addition, such information requests shall not solicit information that solely relates to inputs that are stated values or cost allocation methods that have been determined by any final order by the FERC pursuant to FPA Sections 205, 206, or 306 with respect to the Transmission Provider (including an order approving a settlement), except that such information requests shall be permitted if they seek to determine if there have been material changed circumstances and to confirm consistency with the applicable order (and associated settlement, if any).

d. The Transmission Provider shall make a good faith effort to respond to information requests pertaining to the Annual Update within fifteen (15) business days of receipt of such requests. Such data responses shall be served on all customers identifying themselves to the Transmission Provider as interested. The Transmission Provider may give reasonable priority to responding to requests that satisfy the practicable coordination and consolidation provision of Section 2.c above.

e. Any interested party shall have up to one hundred and twenty (120) days after the Publication Date (unless such period is extended with the written consent of the Transmission Provider) to review the calculations ("Review Period") and to notify the Transmission Provider in writing of any specific challenges, including challenges related to Material Accounting Changes, to the application of the Formula Rate

("Preliminary Challenge"). Notice of such Preliminary Challenges shall be promptly posted (at the same location as the Annual Update) by the Transmission Provider. It is the intent of the Transmission Provider to attempt to informally resolve an issue(s) concerning the Annual Update with an interested party during the Review Period. If an interested party is not satisfied with the resolution of an issue(s), then the interested party may submit to the Transmission Provider a Preliminary Challenge regarding each such issue. The submittal of the Preliminary Challenge, which shall serve as notice to the Transmission Provider of the existence of the challenge, must occur on or before the last day of the Review Period.

f. Subject to the limitations in Section 3(g), (i) a party's failure to make a Preliminary Challenge with respect to an Annual Update shall not bar that party from making a Formal Challenge with respect to that Annual Update, and (ii) a party's failure to make a Preliminary Challenge or Formal Challenge with respect to any Annual Update shall not bar that party from making a Preliminary Challenge or Formal Challenge with respect to any subsequent Annual Update**.**

g. Preliminary Challenges and Formal Challenges shall be subject to the resolution procedures and limitations in Section 3. In any proceeding initiated to address a Preliminary or Formal Challenge or *sua sponte* by the Commission, a party or parties (other than the Transmission Provider) seeking to modify the Formula Rate in any respect shall bear the burden of proving that the Formula Rate is no longer just and reasonable without such modification and that the proposed modification is just, reasonable and consistent with the original intent of the Formula Rate and the procedures in these Protocols.

Section 3 Resolution of Challenges

a. The Transmission Provider shall respond in writing, including supporting documentation, to the interested party making a Preliminary Challenge within thirty (30) days after the end of the Review Period.

b. If a Transmission Provider and any Customer have not resolved any Preliminary Challenge to the Annual Update, an interested party shall be entitled to make a Formal Challenge with the FERC, pursuant to FPA Sections 206 and/or 306, which shall be served on the Transmission Provider by electronic service on the date of such filing. Any such Formal Challenge shall not be filed sooner than sixty (60) days after the end of the Review Period. However, there shall be no need to make a Formal Challenge or to await conclusion of the time periods in Section 2 if the FERC already has initiated a proceeding to consider the Annual Update. All other interested parties shall have the right to make a Formal Challenge at any time as provided in these Protocols.

c. Any response by the Transmission Provider to a Formal Challenge must be submitted to the FERC within thirty (30) days of the date of the filing of the Formal Challenge, unless FERC establishes an earlier deadline for such response. The Transmission Provider shall serve its response, on the date it submits the response to FERC, on the party(ies) that filed the Formal Challenge.

d. In any proceeding initiated by the FERC concerning one or more Annual Updates or in response to a Formal Challenge, the Transmission Provider shall bear the burden of proving that it has reasonably applied the terms of the Formula Rate (including, but not limited to, consistency with the Fundamental Predicates) and the applicable procedures in these Protocols, in the Annual Update(s) at issue; provided, however, that challenges to

the prudency of costs shall apply then-existing criteria and evidentiary burdens established in FERC policy applicable to prudence challenges in a Section 205 context.

e. In any proceeding initiated under Federal Power Act Section 206, interested parties seeking to change the Formula Rate shall bear the burden of proof. Notwithstanding any refund effective date that may be assigned to such Section 206 proceeding, any change to the Formula Rate or input data that results from such Section 206 proceeding, which was filed during the period when an Annual Update was not yet final pursuant to Section 3.f, shall be implemented using the same procedures included in Section 4.

f. Subject to judicial review of FERC orders, each Annual Update shall become final and no longer subject to challenge pursuant to these Annual Review Protocols or by any other means by the FERC or any other entity on the later to occur of (i) passage of twelve (12) months from the Publication Date (or extended period, if applicable) if no such challenge has been made and the FERC has not initiated a proceeding to consider the Annual Update, or (ii) a final FERC order issued in response to a Formal Challenge or a proceeding initiated by the FERC to consider the Annual Update; provided, however, that if a mistake or error is made in an Annual Update in a given year ("Year X Update") that becomes apparent in the course of reviewing information requests or submitting a Preliminary Challenge to the Transmission Provider or submitting a Formal Challenge to FERC (or in a FERC-initiated proceeding) regarding the first or second subsequent Annual Update, refunds with interest, in accordance with 18 C.F.R. § 35.19a, will be due relating to the Year X Update.

g. Except as may specifically be provided herein and/or in a FERC-approved settlement agreement pertaining to this Formula Rate, nothing herein shall limit in

any way (i) the right of the Transmission Provider to file unilaterally, pursuant to FPA Section 205 and FERC's regulations thereunder, changes to the Formula Rate or any of its inputs, or (ii) the right of any other party to file unilaterally, pursuant to FPA Sections 206 and/or 306 and FERC's regulations thereunder, a request for changes to the Formula Rate or any of its inputs.

h. Resolution of Formal Challenges concerning changes in Fundamental Predicates shall necessitate adjustments to the Formula Rate input data for the applicable Annual Update or changes to the Formula Rate that are affected by the change or changes in one or more Fundamental Predicates, so as to ensure that all elements of the Formula Rate that are affected by the change in the Fundamental Predicate(s) operate together to produce a just, reasonable and not unduly discriminatory or preferential Formula Rate, consistent with the intent of the Formula Rate.

Section 4 <u>Adjustments to Charges to Reflect Resolution of Challenges</u>

a. Except as set forth in Section 4.b below, any increase or decrease in charges paid or payable for transmission services that results from the procedures set forth herein shall be incorporated into the Formula Rate and the charges produced by the Formula Rate (with interest determined in accordance with 18 C.F.R. § 35.19a) in the Annual Update for the next effective Rate Period. For example, if the procedures set forth herein result in a determination that an increase or decrease in the charges paid during Year 1 is warranted, the charges payable during Year 2 shall reflect: (i) the recovery of any underpayment during Year 1 or the rebate of any overpayment during Year 1, plus (ii) interest on the underpayment or overpayment, calculated as set forth in Section 4.c.

This reconciliation mechanism shall apply in lieu of mid-Rate Year adjustments and any refunds or surcharges.

b. Any increase or decrease in charges paid or payable for transmission services that results from one of the following events shall be reflected as an increase or reduction in charges (with interest determined in accordance with 18 C.F.R. § 35.19a) on the next monthly billing statement following a determination of the need for the adjustment:

(i) revisions to the Transmission Provider's accounting and reporting of its costs to correct errors,

(ii) revisions to the Transmission Provider's accounting and reporting of its costs to reflect the resolution of Preliminary Challenges or Formal Challenges by FERC order or by settlement or as the result of any FERC proceeding to consider the Annual Update.

c. For purposes of calculating interest due under Sections 4.a and 4.b, the effective date of any adjustment in the charges payable for any Rate Period shall be June 1 of any year affected by the adjustment.

d. Notwithstanding the provisions of Section 4.a, actual refunds or surcharges (with interest determined in accordance with 18 C.F.R. § 35.19a) shall be made in the event that the Formula Rate is replaced by a stated rate for DEP.

Section 5 Update of Formula Rate for FERC Form No. 1 and USoA References

FERC occasionally changes the format and/or content of the FERC Form 1 and makes substantive changes to the USofA. In some instances, those changes (hereinafter, "Form/USoA Changes") may affect the calculations set forth in the Formula Rate.

a. If FERC adopts any such Form/USoA Changes that do not affect the rates for Transmission Service derived from the Annual Update, the Transmission Provider may, at its discretion and at a time of its choosing, make a filing pursuant to FPA Section 205 (the "Ministerial Filing") to update the references in the Formula Rate to reflect any such Form/USoA Changes. Any such proceeding shall be limited to the updating changes proposed by the Transmission Provider and may not be used to raise issues unrelated to the proposed changes ("Limited 205 Proceeding").

b. As an alternative to a Limited 205 Proceeding pursuant to Section 5.a, the Transmission Provider instead may elect to include the updating changes that could have been made in a Ministerial Filing as part of a filing under FPA Section 205 to otherwise amend the Formula Rate ("Normal 205 Proceeding"). In that event, the scope of the Normal 205 Proceeding shall not be limited to the changes that update the references in the Formula Rate to reflect any Form/USoA Changes.

c. If FERC adopts one or more Form/USoA Changes prior to or between any Limited 205 Proceeding or Normal 205 Proceeding, and if such Form/USoA Changes cause the then- current Form 1 or USoA to depart from the Form 1 or USoA referenced in the Formula Rate but does not affect the rates for Transmission Service derived from the Annual Update, the Transmission Provider's Annual Update shall include a reconciliation so that interested parties can confirm that the Formula Rate is being applied consistent with the as-filed Formula Rate.

d. If FERC adopts one or more Form/USoA Changes that cause the then-current Form 1 or USoA to depart from the Form 1 or USoA referenced in the Formula Rate and if such changes do affect the rates for Transmission Service derived from the Annual Update, the

Transmission Provider shall initiate a Normal 205 Proceeding to modify the references in the Formula Rate to reflect any such Form/USoA Changes, with the intent that the resulting calculations shall produce, to the greatest extent practicable, the same outcome as the calculations produced under the Formula Rate without consideration of the Form/USoA changes.

OATT ATTACHMENT H.3

FORMULA RATE NOTES

1.0 Non-load and Transmission-related Revenue Credits.

(i) The non-load and transmission-related revenue credits in the Formula Rate shall be determined in the following manner:

(1) All revenues associated with facilities allocated to the transmission function, including both direct and indirect allocations (e.g., general and intangible plant and administrative and general expense) shall be treated as revenue credits in the Formula Rate. Such revenue credits shall include, but shall not be limited to, transmission facilities lease/rental payments, direct assignment facilities charges, pole attachment fees, and general plant-related income.

(2) Transmission revenues from Short-Term Firm and Non-Firm Transmission Services under the OATT and transmission service similar to Short-Term Firm or Non-Firm Transmission Services under the OATT shall be treated as revenue credits in the Formula Rate.

(3) Transmission services revenues from FERC Account 456.1 shall be treated as revenue credits in the Formula Rate, but ancillary services revenues from FERC Account 456.1 shall not be revenue credits in the Formula Rate.

(4) All transmission revenue credits shall be directly assigned to the transmission function in the Formula Rate (i.e., they shall not be allocated in the Formula Rate using a transmission plant allocator).

(5) Revenues associated with indirect allocations of costs to the transmission function (e.g., general and intangible plant) shall be allocated to the transmission

function in the Formula Rate based on the same underlying indirect allocations of costs and treated as a revenue credit.

1.1 End-of-Year Data. The Formula Rate shall include the end-of-year balances from DEP's FERC Form No. 1 reports for the rate base items (other than Cash Working Capital) included in the Formula Rate.

1.2 Cash Working Capital. The Formula Rate shall include cash working capital based on a formulary approach as follows: 1/8 multiplied by the total of operation and maintenance expense, as specified in the Formula Rate template attached to this Settlement Agreement as Exhibit A.

1.3 Prepayments for Network Upgrades by Generators. The Formula Rate shall include as an offset to rate base in the Formula Rate the amount of refundable prepayments made by generators for network upgrades that DEP has not refunded to the OATT transmission customer as credits to its transmission charges; this will ensure DEP does not earn a return on those funds. Correspondingly, the amount of interest paid to OATT transmission customers as their balances are credited against their transmission service shall be included as an expense in

the Formula Rate. DEP shall not capitalize and add any AFUDC to the completed cost of such network upgrades, but instead will include only the balance of any unrefunded interest accrued at the FERC refund interest rate as an addition to rate base. The Formula Rate includes a hypothetical example to illustrate how refundable prepayments for network upgrades are treated in the Formula Rate.

1.4 Credits for Customer-owned Facilities. The Formula Rate shall include a placeholder for any future credits for customer-owned facilities to prevent any under-recovery of

revenues by DEP due to any credits provided to OATT transmission customers for their own facilities

1.5 Transmission Provider's Compliance with Order No. 2003. In accordance with FERC Order No. 2003, the Formula Rate shall exclude any transmission plant that meets the definition of "Interconnection Facilities" and was placed in service for DEP's own generation facilities after March 15, 2000.

1.6 Directly Assigned or Assignable Costs. The Formula Rate shall exclude all costs that are properly directly assigned or assignable to one or more particular customers, including costs directly assigned or assignable to DEP.

1.7 DEP Payments to "Affected Transmission Owners" and Regional Cost Allocation.

On December 7, 2007, pursuant to Order No. 890, Progress Energy, Inc., on behalf of DEP, submitted its Order No. 890 Attachment K (included in this Tariff as Attachment N-1) compliance filing in Docket No. OA08-51-000. The regional cost allocation methodology addressed in this compliance filing is incorporated in the Formula Rate. Should FERC reject the filed methodology, then, within thirty days of refiling a revised cost allocation methodology with FERC, DEP shall submit to the Customers a proposal to address the treatment under the Formula Rate of any payments made by DEP to Affected Transmission Owners, and payments received by DEP as an Affected Transmission Owner, under such revised filing. If the interested Customers and DEP reach agreement within ninety days, DEP shall make a filing, pursuant to FPA Section 205, to change the Formula Rate to properly account for such payments. If the interested Customers and DEP do not reach agreement within ninety days, DEP may make a filing, pursuant to FPA Section 205, to change the Formula Rate to properly account for such payments, and any such filing may be opposed by any Customer.

1.8 Accumulated Deferred Income Taxes (ADIT). Accumulated deferred income taxes (ADIT) reflected in the Formula Rate shall be only such amounts as are properly allocated or assigned to the transmission function. In each Annual Update (as defined in the Formula Rate Implementation Protocols), DEP shall provide a spreadsheet that shows the functionalization of the FERC Form No. 1 reported amounts for ADIT and supports the amount of ADIT to be reflected in the Formula Rate. For example, the following ADIT items shall not be included in the Formula Rate because they are not transmission-related ADIT:

(i) Any future income tax deficiency items in ADIT shall be assigned to "other" in the Formula Rate.

(ii) Deferred taxes related to existing Environmental Cleanup Reserve shall be assigned to "other" in the Formula Rate.

(iii) Any future prepaid Pension related items shall be excluded from rate base in the Formula Rate and, accordingly, there shall be no ADIT balance offset for these items.

(iv) Because the unamortized balance of GridSouth costs is excluded from rate base pursuant to provision 3.5(ii), there will be no ADIT offset in the formula rate calculation.

1.9 Intangible Plant.

(i) In future Annual Updates, DEP shall provide supporting information concerning gross intangible plant investment and associated depreciation in order to establish net intangible plant investments so that OATT transmission customers may compare DEP's net intangible plant investments from year to year.

(ii) To the extent that the net intangible plant investment increases from one year to the next, DEP shall provide in the Annual Update sufficient information to explain the increase and to support the allocation of any portion of the increase to the transmission function. DEP

shall adjust the allocation of net intangible plant investment in the Formula Rate to the extent necessary to reflect an appropriate allocation to the transmission function. DEP shall include this adjustment and supporting information in the Annual Informational Filing submitted to FERC. If there is a disagreement between DEP and a transmission customer concerning this matter, the disagreement shall be resolved through a Preliminary Challenge and/or Formal Challenge under the Formula Rate Implementation Protocols (rather than through an FPA Section 206 complaint).

1.10 Prepaid Pension Expense and Other Prepayments.

(i) The Formula Rate shall exclude prepaid pension expenses from rate base. The Formula Rate shall include any prepaid pension expenses as an expense to the extent set forth in Section 3.18(ii).

(ii) To the extent that prepaid pension expenses increase from one year to the next, DEP shall provide in the Annual Update sufficient information to explain the increase and to support the allocation of any portion of the increase to the transmission function. DEP shall adjust the allocation of prepaid expenses, to the extent necessary, to reflect an appropriate allocation to transmission. DEP shall include this adjustment and the supporting information in the Annual Informational Filing submitted to FERC. If there is a disagreement between DEP and a transmission customer concerning this matter, such disagreement shall be resolved through a Preliminary Challenge and/or Formal Challenge under the Formula Rate Implementation Protocols (rather than through an FPA Section 206 complaint).

1.11 Extraordinary Property Loss. If a property loss meets the requirements for treatment as an Extraordinary Property Loss (FERC Account 182.1), DEP may request FERC's permission to record the loss in that manner in its books of account. Separately, DEP may seek

FERC's permission to recover through rates such prudently incurred costs as are associated with an Extraordinary Property Loss; provided, however, (i) pursuant to Section 3.7(ii) above, DEP may not include the amortization of any such Extraordinary Property Loss in the Formula Rate without having made a Section 205 filing to change the Formula Rate value for that item, and (ii) DEP may seek to reflect in the Formula Rate only that portion of such an Extraordinary Property Loss as may be properly allocated or assigned to the transmission function.

1.12 Extraordinary Transmission O&M Expenses. O&M expenses allocated or assigned to the transmission function that are extraordinary and non-recurring and have a material effect on charges shall be amortized in the Formula Rate over three to five years (subject to FERC approval), as appropriate under the circumstances. The Formula Rate shall include the unamortized balance in rate base.

1.13 Property Taxes. Property taxes shall be allocated in the Formula Rate using the Gross Plant allocator.

1.14 Property Insurance. Property insurance shall be allocated in the Formula Rate using the Gross Plant allocator.

1.15 DEP Power Marketing Costs.

(i) To the extent that any costs associated with DEP's power marketing operations may be included in Administrative and General ("A&G") expense accounts, those costs shall be excluded from the A&G expenses reflected in the Formula Rate.

(ii) The divisor of the labor allocator in the Formula Rate shall include any labor-related costs associated with DEP's power marketing operations.

1.16 FERC Account 561. Consistent with FERC Order No. 668, the Formula Rate reflects the appropriate treatment of Account 561 subaccounts such that the Formula Rate

includes only those items associated with transmission service and excludes all other costs (for example, costs chargeable to Schedule 1 – Load Control and Dispatch Service).

1.17 Asset Retirement Obligations. The Formula Rate shall not include asset retirement obligations in any plant investment.

1.18 A&G Expenses. The Administrative and General expenses reflected in the Formula Rate shall not include any portion of DEP's expenses for advertising, charitable contributions, or other voluntary payments for such items as industry association dues (*e.g.*, Edison Electric Institute dues), contributions to industry research and development activities (*e.g.*, Electric Power Research Institute), or environmental reserve accruals.

1.19 Radial Facilities.

(i) The cost of New Radial Facilities owned by DEP shall be excluded from the Formula Rate as reflected in the provisions thereof. Customer shall construct and own New Radial Facilities necessary to serve the load of such Customer; and the cost of New Radial Facilities owned by the Customer shall not be eligible for Order 890 Credits. At the time that a New Radial Facility owned by a Customer experiences a change in characteristics such that it meets the Commission's standards to be treated as an integrated facility, including the standards and policies set forth in Order No. 890-B, the Customer shall then be entitled at its election to Order 890 Credits for the undepreciated portion of the cost of such facility. At the time that a New Radial Facility owned by DEP experiences a change in characteristics such that it meets the Commission's standards to be treated as an integrated facility, the undepreciated portion of the cost of such facility may then be included in the Formula Rate.

(ii) The cost of Existing Radial Facilities owned by DEP, and upgrades thereto, shall be included in the Formula Rate. Customers currently receiving Order 890 Credits for

Existing Radial Facilities or whose Existing Radial Facilities are rolled into DEP's rates will continue to receive such credits or rolled-in rate treatment until the facilities are fully depreciated. No Customer shall have any obligation to refund any Order 890 Credits previously paid to it by DEP with respect to Existing Radial Facilities. Further, nothing in this Tariff is intended to constitute a waiver of any Customer's right to seek appropriate treatment under Order 890 for Existing Radial Facilities or to recover Order 890 Credits for Existing Radial Facilities.

(iii) The following terms shall have the following definitions:

(1) "New Radial Facilities" shall mean lines and facilities that (1) are radially constructed, (2) are placed in service after December 31, 2014, excluding those that were scheduled to be in service prior to December 31, 2014 but were delayed due to force majeure, and (3) do not meet the Commission's standard for treatment as lines and facilities that are integrated with DEP's transmission system. New Radial Facilities built for or by a Customer will be presumed to provide benefits to DEP's integrated network if such facilities would be treated as part of DEP's integrated network if built exclusively to provide service to DEP's retail customers. For the avoidance of doubt, switches and related equipment rated at 69 kV or above which meet the Commission's standard for treatment as integrated facilities, or that would be treated as part of DEP's integrated network if built exclusively to provide service to DEP's retail customers, will not constitute "New Radial Facilities."

(2) "Existing Radial Facilities" shall mean lines and facilities that (1) are radially constructed, (2) are placed in service no later than December 31, 2014 or were scheduled to be in service prior to December 31, 2014 but were delayed due to force majeure, and (3) do not meet the Commission's standard for treatment as lines and facilities that are

integrated with DEP's transmission system. Existing Radial Facilities built for or by a Customer will be presumed to provide benefits to DEP's integrated network if such facilities would be treated as part of DEP's integrated network if built exclusively to provide service to DEP's retail customers.

(3) "Order 890 Credits" shall mean credits with respect to a transmission facility owned by a transmission customer which is integrated with the transmission provider's system to which such customer is entitled under the Commission's Order 890.

1.20 Rate of Return on Equity and Common Equity Ratio Moratorium.

The rate of return on common equity set forth in Attachment H.1, Exhibit DEP-2, page 4, line 30 and common equity ratio caps set forth in Attachment H.1, Exhibit DEP-2, page 5, note M shall not be subject to change during the period January 1, 2016 through December 31, 2019 ("Rate Moratorium Period"), and neither DEP nor any Transmission Customer may submit (or lend support to) a filing under Section 205 or 206 of the FPA seeking a change in the rate of return on equity or common equity ratio caps set forth in Attachment H.1 that would become effective prior to January 1, 2020. For the avoidance of doubt, the rates for OATT transmission service provided by DEP for January 1, 2020 through May 31, 2020 (which under the existing test year methodology are based on costs for 2018) and for OATT transmission service provided by DEP for June 1, 2020 through May 31, 2021 (which under the existing test year methodology are based on costs for 2019) shall not be subject to the foregoing rate moratorium. The rate of return on common equity and common equity ratio caps shall remain in effect after the Rate Moratorium Period ends unless changed pursuant to FPA Section 205 or 206.

1.21. Test Year Methodology Moratorium.

DEP's methodology of using an historical test year without a true-up based on actual costs as set forth in DEP's Formula Rate and Formula Rate Implementation Protocols in Duke OATT Attachments H.1 and H.2 (i.e., rates that change each June 1 based on the immediately preceding year's cost of service, calculated using end-of-year balances) shall not be subject to change during the period January 1, 2016 through December 31, 2019 ("Rate Moratorium Period"), and neither DEP nor any Transmission Customer may submit (or lend support to) a filing under Section 205 or 206 of the FPA seeking to change this historical test year methodology (i.e., rates that change each June 1 based on the immediately preceding year's cost of service, calculated using end-of-year balances) as set forth in the current DEP Formula Rate and Formula Rate Implementation Protocols in Duke OATT Attachments H.1 and H.2 that would become effective prior to January 1, 2020. This limitation on parties' Section 205 and 206 rights applies only to the historical test year methodology used in Duke OATT Attachment H.1 and H.2; it does not limit parties' Section 205 or 206 rights to seek other changes to Duke OATT Attachment H.1, H.2 or H.3, such as changes to individual formula rate components. For the avoidance of doubt, the rates for OATT transmission service provided by DEP for January 1, 2020 through May 31, 2020 (which under the existing historical test year methodology are based on costs for 2018) and for OATT transmission service provided by DEP for June 1, 2020 through May 31, 2021 (which under the existing historical test year methodology are based on costs for 2019) shall not be subject to the foregoing rate moratorium. This historical test year methodology shall remain in effect after the Rate Moratorium Period ends unless changed pursuant to FPA Section 205 or 206.

1.22 Real Power Loss Factor Moratorium.

The stated real power loss factors that are in effect for services provided from June 1, 2017 through May 31, 2019 pursuant to OATT Sections 15.7 and 28.5 shall not be subject to change through a filing with FERC unless the Settling Parties all shall have consented to such filing in writing, as provided in settlement of FERC Docket No. ER17-1357.

The methodology for calculating the real power loss factors included in OATT Attachment W shall not be subject to change through a filing submitted to FERC prior to June 1, 2021 unless the Settling Parties all shall have consented to such filing in writing, as provided in settlement of FERC Docket No. ER17-1357. The consent of all such entities shall not be required for a filing proposing a change in the methodology for calculating the real power loss factors that is submitted to FERC on or after June 1, 2021.

ATTACHMENT I

INDEX OF NETWORK INTEGRATION TRANSMISSION SERVICE CUSTOMERS

See Transmission Provider's Electric Quarterly Report at the following Internet address:

http://www.ferc.gov/docs-filing/eqr/data/spreadsheet.asp

ATTACHMENT J

STANDARD LARGE GENERATOR INTERCONNECTION PROCEDURES (LGIP)

including

STANDARD LARGE GENERATOR

INTERCONNECTION AGREEMENT (LGIA)

(DEF Zone)

TABLE OF CONTENTS

Page

SECTION 1. DEFINITIONS 1

SECTION 2. SCOPE AND APPLICATION 11

2.1 Application of Standard Large Generator Interconnection Procedures. 11

2.2 Comparability. 11

2.3 Base Case Data. 11

2.4 No Applicability to Transmission Service. 12

SECTION 3. DEFINITIVE INTERCONNECTION STUDY PROCESS- INFORMATIONAL INTERCONNECTION STUDY. 12

3.1 Informational Interconnection Study Agreement. 12

3.2 Scope of Informational Interconnection Study. 12

3.3 Informational Interconnection Study Procedures. 13

SECTION 4. INTERCONNECTION REQUESTS 13

4.1 General. 13

4.1.1 Serial Interconnection Study Deposit and Process. 13

4.1.2 Definitive Interconnection Study Deposit and Process. 14

4.2 Identification of Types of Interconnection Services 14

4.2.1 Serial Interconnection Study Process 14

4.2.2 Definitive Interconnection Study Process 15

4.2.3 Energy Resource Interconnection Service. 15

4.2.3.1 The Product. 15

4.2.3.2 The Study. 15

4.2.4 Network Resource Interconnection Service. 15

4.2.4.1 The Product. 15

4.2.4.2 The Study. 15

4.3 Utilization of Surplus Interconnection Service. 16

4.3.1 Surplus Interconnection Service Requests. 16

4.3.2 Process for Surplus Interconnection Service Requests 16

4.4 Valid Interconnection Request. 18

4.4.1 Initiating an Interconnection Request in the Serial Interconnection Study Process 18

4.4.2 Initiating an Interconnection Request in the Definitive Interconnection Study Process 18

4.4.3 Acknowledgment of Interconnection Request. 20

4.4.4 Deficiencies in Interconnection Request Under the Serial Interconnection Study Process 20
4.4.5 Deficiencies in Interconnection Request Under the Definitive Interconnection Study Process 20
4.4.6 Scoping Meeting for Serial Interconnection Study Process. 20
4.4.7 Scoping Meeting for Definitive Interconnection Study Process. 21
4.5 OASIS Posting. 22
4.5.1 Requirement to Post Interconnection Study Metrics. 22
4.5.2 Serial Interconnection Study Processing Metrics. 22
4.5.2.1 Feasibility Studies Processing Time. 22
4.5.2.2 Serial Interconnection System Impact Studies Processing Time. 23
4.5.3 Definitive Interconnection Study Processing Metrics. 23
4.5.3.1 Definitive Interconnection Study Phase 1 Processing Time. 23
4.5.3.2 Definitive Interconnection Study Phase 2 Processing Time. 23
4.5.3.3 Definitive Interconnection Study Phase 3 Processing Time. 24
4.5.4 Interconnection Facilities Studies Processing Time. 24
4.5.5 Interconnection Service Requests Withdrawn From Interconnection Queue. 25
4.5.6 Requirement to Post Interconnection Study Metrics. 25
4.5.7 Reporting Requirement for Late Studies. 25
4.6 Coordination with Affected Systems. 26
4.7 Withdrawal. 26
4.7.1 Definitive Interconnection Study Process – Withdrawal Penalty. 27
4.7.1.1 Calculation of the Withdrawal Penalty. 27
4.7.1.2 Distribution of the Withdrawal Penalty. 28
4.8 Identification of Contingent Facilities. 29
4.8.1 Method for Identifying Contingent Facilities 29
4.8.2 Estimates Available for Contingent Facilities 30
4.8.3 Inclusion of Contingent Facilities in LGIA 30
SECTION 5. QUEUE POSITION AND QUEUE PROCESSING 31
5.1 Serial Interconnection Study Process Queue Position 31
5.1.1 Serial Interconnection Study Process – Clustering 31
5.2 Definitive Interconnection Study Process Queue Position 32
5.3 Transferability of Queue Position. 32
5.4 Modifications. 32
5.4.1 Material Modifications prior to System Impact Study Agreement Execution 32

5.4.2 Material Modifications prior to Facilities Study Agreement Execution 33
5.4.3 Modification Inquiry Process. 33
5.4.4 Receipt of Request for Modification. 33
5.4.5 Commercial Operation Date 33
5.4.6 Technological Change Procedure. 34
5.4.6.1 Technological Change Request. 34
SECTION 6. PROCEDURES FOR INTERCONNECTION REQUESTS SUBMITTED PRIOR TO EFFECTIVE DATE OF STANDARD LARGE GENERATOR INTERCONNECTION PROCEDURES 35
6.1 Queue Position for Pending Requests. 35
6.2 New Transmission Provider. 35
SECTION 7. TRANSITION PROCEDURES FOR DEFINITIVE INTERCONNECTION STUDY PROCESS. 36
7.1 Transitional Serial Process. 36
7.2 Transitional Cluster Process. 38
7.2.1 Transitional Cluster Eligibility Requirements 38
7.2.2 Transitional Cluster Expedited Customer Engagement Process and Phase 1 39
7.2.3 Transitional Cluster Study Phase 2 40
7.2.4 Transitional Cluster Facilities Study 41
7.2.5 Transitional Cluster LGIA 42
7.2.6 Transitional Cluster Withdrawal Penalty 42
SECTION 8. SERIAL INTERCONNECTION FEASIBILITY STUDY 42
8.1 Serial Interconnection Feasibility Study Agreement. 42
8.2 Scope of Serial Interconnection Feasibility Study. 43
8.3 Serial Interconnection Feasibility Study Procedures. 43
8.3.1 Meeting with Transmission Provider. 44
8.4 Re-Study. 44
SECTION 9. SERIAL INTERCONNECTION SYSTEM IMPACT STUDY 44
9.1 Serial Interconnection System Impact Study Agreement. 44
9.2 Execution of Serial Interconnection System Impact Study Agreement. 44
9.3 Scope of Serial Interconnection System Impact Study. 45
9.4 Serial Interconnection System Impact Study Procedures 45
9.5 Meeting with Transmission Provider. 46
9.6 Re-Study. 46
SECTION 10. DEFINITIVE INTERCONNECTION STUDY PROCESS 46
10.1 Initiation of a Definitive Interconnection System Impact Study Cluster. 46

10.2 Initiation of a Resource Solicitation Cluster. 47
10.3 Definitive Interconnection Study Process Study Cost Allocation. 48
10.4 Transmission Provider's Interconnection Facilities and Network Upgrade Cost Allocation. 49
10.5 Definitive Interconnection System Impact Study Agreement. 50
10.6 Execution of Definitive Interconnection System Impact Study Agreement. 50
10.7 Scope of Definitive Interconnection System Impact Study. 50
10.8 Definitive Interconnection System Impact Study Procedures. 51
10.9 Post-DISIS Report Meeting. 54
10.10 Re-Study. 54
10.11 Readiness Milestones. 54
10.11.1 Readiness Milestone 1 ("M1"). 55
10.11.2 Readiness Milestone 2 ("M2"). 55
10.11.3 Readiness Milestone 3 ("M3"). 55
10.11.4 Readiness Milestone 4 ("M4"). 56
10.11.5 Readiness Milestone 5 ("M5"). 56
10.11.6 Security Requirements. 56
SECTION 11. INTERCONNECTION FACILITIES STUDY 58
11.1 Serial Interconnection Study Process- Interconnection Facilities Study Agreement. 58
11.2 Definitive Interconnection Study Process – Facilities Study Agreement 58
11.3 Scope of Interconnection Facilities Study. 58
11.4 Interconnection Facilities Study Procedures. 59
11.5 Meeting with Transmission Provider. 60
11.6 Serial Interconnection Study Process Facilities Study Re-Study. 60
11.7 Definitive Interconnection Study Process Facilities Study Re-Study 60
SECTION 12. ENGINEERING & PROCUREMENT ("E&P") AGREEMENT. 60
SECTION 13. SERIAL INTERCONNECTION STUDY PROCESS- OPTIONAL INTERCONNECTION STUDY 61
13.1 Optional Interconnection Study Agreement. 61
13.2 Scope of Optional Interconnection Study. 61
13.3 Optional Interconnection Study Procedures. 61
SECTION 14. STANDARD LARGE GENERATOR INTERCONNECTION AGREEMENT (LGIA) 62
14.1 Tender. 62
14.2 Negotiation. 62
14.3 Serial Interconnection Study Process – Execution and Filing. 62

14.4 Definitive Interconnection Study Process – Execution and Filing. 63
14.5 Commencement of Interconnection Activities. 64
SECTION 15. CONSTRUCTION OF TRANSMISSION PROVIDER'S INTERCONNECTION FACILITIES AND NETWORK UPGRADES 64
15.1 Schedule. 64
15.2 Construction Sequencing. 64
15.2.1 General. 64
15.2.2 Advance Construction of Network Upgrades That are an Obligation of an Entity Other Than Interconnection Customer. 64
15.2.3 Advancing Construction of Network Upgrades That are Part of an Expansion Plan of the Transmission Provider. 65
15.2.4 Amended Interconnection System Impact Study. 65
SECTION 16. MISCELLANEOUS 65
16.1 Confidentiality. 65
16.1.1 Scope. 65
16.1.2 Release of Confidential Information. 66
16.1.3 Rights. 66
16.1.4 No Warranties. 66
16.1.5 Standard of Care. 66
16.1.6 Order of Disclosure. 66
16.1.7 Remedies. 67
16.1.8 Disclosure to FERC, its Staff, or a State. 67
16.2 Delegation of Responsibility 68
16.3 Serial Interconnection Study Process – Obligation for Study Costs 68
16.4 Definitive Interconnection Study Process – Obligation for Study Costs and Withdrawal Penalty 68
16.5 Third Parties Conducting Studies. 69
16.6 Disputes 69
16.6.1 Submission. 69
16.6.2 External Arbitration Procedures. 70
16.6.3 Arbitration Decisions. 70
16.6.4 Costs. 70
16.7 Local Furnishing Bonds. 71
16.7.1 Transmission Providers That Own Facilities Financed by Local Furnishing Bonds. 71
16.7.2 Alternative Procedures for Requesting Interconnection Service. 71

Appendix 1 – Informational Interconnection Study Request

Appendix 2 – Informational Interconnection Study Agreement

Appendix 3 – Interconnection Request for a Large Generating Facility

Appendix 4 – Interconnection Feasibility Study Agreement

Appendix 5 – Serial Interconnection System Impact Study Agreement

Appendix 6-1 – Overview and Timeline of Initiation of a DISIS Cluster: the DISIS Request Window, Customer Engagement Window, and Phase 1 of the DISIS

Appendix 6-2 – Overview and Timeline of Definitive Interconnection Study Process, Including the DISIS Process

Appendix 6-3 – Definitive Interconnection System Impact Study Agreement

Appendix 7 – Interconnection Facilities Study Agreement

Appendix 8-1 – Transitional Serial Interconnection Facilities Study Agreement

Appendix 8-2 – Transitional Cluster Study Agreement

Appendix 9 – Optional Interconnection Study Agreement

Appendix 10 – Standard Large Generator Interconnection Agreement

Appendix 11– Interconnection Procedures for a Wind Generating Plant

ATTACHMENT J -- STANDARD LARGE GENERATOR INTERCONNECTION PROCEDURES (LGIP)

(APPLICABLE TO GENERATING FACILITIES THAT EXCEED 20 MW) (DEF Zone)

Section 1. Definitions.

Adverse System Impact shall mean the negative effects due to technical or operational limits on conductors or equipment being exceeded that may compromise the safety and reliability of the electric system.

Affected System shall mean an electric system other than the Transmission Provider's Transmission System that may be affected by the proposed interconnection.

Affected System Operator shall mean the entity that operates an Affected System.

Affiliate shall mean, with respect to a corporation, partnership or other entity, each such other corporation, partnership or other entity that directly or indirectly, through one or more intermediaries, controls, is controlled by, or is under common control with, such corporation, partnership or other entity.

Ancillary Services shall mean those services that are necessary to support the transmission of capacity and energy from resources to loads while maintaining reliable operation of the Transmission Provider's Transmission System in accordance with Good Utility Practice.

Applicable Laws and Regulations shall mean all duly promulgated applicable federal, state and local laws, regulations, rules, ordinances, codes, decrees, judgments, directives, or judicial or administrative orders, permits and other duly authorized actions of any Governmental Authority.

Applicable Reliability Council shall mean the reliability council applicable to the Transmission System to which the Generating Facility is directly interconnected.

Applicable Reliability Standards shall mean the requirements and guidelines of NERC, the Applicable Reliability Council, and the Control Area of the Transmission System to which the Generating Facility is directly interconnected.

Base Case shall mean the base case power flow, short circuit, and stability data bases used for the Interconnection Studies by the Transmission Provider or Interconnection Customer.

Breach shall mean the failure of a Party to perform or observe any material term or condition of the Standard Large Generator Interconnection Agreement.

Breaching Party shall mean a Party that is in Breach of the Standard Large Generator Interconnection Agreement.

Business Day shall mean Monday through Friday, excluding Federal Holidays.

Calendar Day shall mean any day including Saturday, Sunday or a Federal Holiday.

Cluster shall mean a group of Interconnection Requests (one or more) that are studied together for the purpose of conducting the Interconnection Studies.

Cluster Study shall mean an Interconnection Study evaluating a Cluster of one or more Interconnection Requests.

Clustering shall mean the process whereby a group of Interconnection Requests is studied together, instead of serially, for the purpose of conducting the Interconnection Studies.

Commercial Operation shall mean the status of a Generating Facility that has commenced generating electricity for sale, excluding electricity generated during Trial Operation.

Commercial Operation Date of a unit shall mean the date on which the Generating Facility commences Commercial Operation as agreed to by the Parties pursuant to Appendix E to the Standard Large Generator Interconnection Agreement.

Confidential Information shall mean any confidential, proprietary or trade secret information of a plan, specification, pattern, procedure, design, device, list, concept, policy or compilation relating to the present or planned business of a Party, which is designated as confidential by the Party supplying the information, whether conveyed orally, electronically, in writing, through inspection, or otherwise.

Contingent Facilities shall mean those unbuilt Interconnection Facilities and Network Upgrades upon which the Interconnection Request's costs, timing, and study findings are dependent, and if delayed or not built, could cause a need for Re-Studies of the Interconnection Request or a reassessment of the Interconnection Facilities and/or Network Upgrades and/or costs and timing.

Control Area shall mean an electrical system or systems bounded by interconnection metering and telemetry, capable of controlling generation to maintain its interchange schedule with other Control Areas and contributing to frequency regulation of the interconnection. A Control Area must be certified by an Applicable Reliability Council. Control Area shall have the same meaning as Balancing Authority Area as defined by NERC.

Customer Engagement Window shall have the meaning set forth in Section 10.1 of the LGIP.

Default shall mean the failure of a Breaching Party to cure its Breach in accordance with Article 17 of the Standard Large Generator Interconnection Agreement.

Definitive Interconnection Study Process ("Definitive Interconnection Study") shall mean an Interconnection Study process adopted at Transmission Provider's option for purposes of administering a Cluster Study inclusive of the Informational Interconnection Study Process, the Transitional Serial Study Process, the Transitional Cluster Study Process, the DISIS Request Window, Customer Engagement Window, the Definitive Interconnection System Impact Study, and the Interconnection Facilities Study. Both the Resource Solicitation Cluster and the DISIS Cluster are processed under the Definitive Interconnection Study.

Definitive Interconnection System Impact Study ("DISIS") shall mean an engineering study that evaluates the impact of a Cluster on the safety and reliability of the Transmission System and, if applicable, an Affected System.

Definitive Interconnection System Impact Study Agreement ("DISIS Agreement") shall mean the form of agreement contained in Appendix 6-3 of the LGIP for conducting the Definitive Interconnection System Impact Study.

Definitive Interconnection System Impact Study Cluster ("DISIS Cluster") shall mean an engineering study that evaluates the impact of a Cluster on the safety and reliability of Transmission System and, if applicable, an Affected System.

DISIS Request Window shall have the meaning set forth in Section 10.1 of the LGIP.

Dispute Resolution shall mean the procedure for resolution of a dispute between the Parties in which they will first attempt to resolve the dispute on an informal basis.

Distribution System shall mean the Transmission Provider's facilities and equipment used to transmit electricity to ultimate usage points such as homes and industries directly from nearby generators or from interchanges with higher voltage transmission networks which transport bulk power over longer distances. The voltage levels at which distribution systems operate differ among areas.

Distribution Upgrades shall mean the additions, modifications, and upgrades to the Transmission Provider's Distribution System at or beyond the Point of Interconnection to facilitate interconnection of the Generating Facility and render the transmission service necessary to effect Interconnection Customer's wholesale sale of electricity in interstate commerce. Distribution Upgrades do not include Interconnection Facilities.

Effective Date shall mean the date on which the Standard Large Generator Interconnection Agreement becomes effective upon execution by the Parties subject to acceptance by FERC, or if filed unexecuted, upon the date specified by FERC.

Emergency Condition shall mean a condition or situation: (1) that in the judgment of the Party making the claim is imminently likely to endanger life or property; or (2) that, in the case of a Transmission Provider, is imminently likely (as determined in a non-discriminatory manner) to cause a material adverse effect on the security of, or damage to Transmission Provider's Transmission System, Transmission Provider's Interconnection Facilities or the electric systems of others to which the Transmission Provider's Transmission System is directly connected; or (3) that, in the case of Interconnection Customer, is imminently likely (as determined in a non-discriminatory manner) to cause a material adverse effect on the security of, or damage to, the Generating Facility or Interconnection Customer's Interconnection Facilities. System restoration and black start shall be considered Emergency Conditions; provided that Interconnection Customer is not obligated by the Standard Large Generator Interconnection Agreement to possess black start capability.

Energy Resource Interconnection Service ("ERIS") shall mean an Interconnection Service that allows the Interconnection Customer to connect its Generating Facility to the Transmission Provider's Transmission System to be eligible to deliver the Generating Facility's electric output using the existing firm or non-firm capacity of the Transmission Provider's Transmission System on an as available basis. Energy Resource Interconnection Service in and of itself does not convey transmission service.

Engineering & Procurement ("E&P") Agreement shall mean an agreement that authorizes the Transmission Provider to begin engineering and procurement of long lead-time items necessary for the establishment of the interconnection in order to advance the implementation of the Interconnection Request.

Environmental Law shall mean Applicable Laws or Regulations relating to pollution or protection of the environment or natural resources.

Federal Power Act shall mean the Federal Power Act, as amended, 16 U.S.C. §§ 791a et seq.

FERC shall mean the Federal Energy Regulatory Commission (Commission) or its successor.

Force Majeure shall mean any act of God, labor disturbance, act of the public enemy, war, insurrection, riot, fire, storm or flood, explosion, breakage or accident to machinery or equipment, any order, regulation or restriction imposed by governmental, military or lawfully established civilian authorities, or any other cause beyond a Party's control. A Force Majeure event does not include acts of negligence or intentional wrongdoing by the Party claiming Force Majeure.

Generating Facility shall mean Interconnection Customer's device for the production and/or storage for later injection of electricity identified in the Interconnection Request, but shall not include the Interconnection Customer's Interconnection Facilities.

Generating Facility Capacity shall mean the net capacity, in kW or MW, as applicable, of the Generating Facility and the aggregate net capacity of the Generating Facility where it includes multiple energy production devices.

Good Utility Practice shall mean any of the practices, methods and acts engaged in or approved by a significant portion of the electric industry during the relevant time period, or any of the practices, methods and acts which, in the exercise of reasonable judgment in light of the facts known at the time the decision was made, could have been expected to accomplish the desired result at a reasonable cost consistent with good business practices, reliability, safety and expedition. Good Utility Practice is not intended to be limited to the optimum practice, method, or act to the exclusion of all others, but rather to be acceptable practices, methods, or acts generally accepted in the region.

Governmental Authority shall mean any federal, state, local or other governmental regulatory or administrative agency, court, commission, department, board, or other governmental subdivision, legislature, rulemaking board, tribunal, or other governmental authority having jurisdiction over the Parties, their respective facilities, or the respective services they provide, and exercising or entitled to exercise any administrative, executive, police, or taxing authority or power; provided, however, that such term does not include Interconnection Customer, Transmission Provider, or any Affiliate thereof.

Hazardous Substances shall mean any chemicals, materials or substances defined as or included in the definition of "hazardous substances," "hazardous wastes," "hazardous materials," "hazardous constituents," "restricted hazardous materials," "extremely hazardous substances," "toxic substances," "radioactive substances," "contaminants," "pollutants," "toxic pollutants" or words of similar meaning and regulatory effect under any applicable Environmental Law, or any other chemical, material or substance, exposure to which is prohibited, limited or regulated by any applicable Environmental Law.

Informational Interconnection Study shall mean an analysis based on assumptions specified by Interconnection Customer in the Informational Interconnection Study Agreement as further described in Section 3.2.

Informational Interconnection Study Agreement shall mean the form of agreement contained in Appendix 2 of the LGIP for conducting the Informational Interconnection Study.

Initial Synchronization Date shall mean the date upon which the Generating Facility is initially synchronized and upon which Trial Operation begins.

In-Service Date shall mean the date upon which the Interconnection Customer reasonably expects it will be ready to begin use of the Transmission Provider's Interconnection Facilities to obtain back feed power.

Interconnection Customer shall mean any entity, including the Transmission Provider, Transmission Owner or any of the Affiliates or subsidiaries of either, that proposes to interconnect its Generating Facility with the Transmission Provider's Transmission System.

Interconnection Customer's Interconnection Facilities shall mean all facilities and equipment, as identified in Appendix A of the Standard Large Generator Interconnection Agreement, that are located between the Generating Facility and the Point of Change of Ownership, including any modification, addition, or upgrades to such facilities and equipment necessary to physically and electrically interconnect the Generating Facility to the Transmission Provider's Transmission System. Interconnection Customer's Interconnection Facilities are sole use facilities.

Interconnection Facilities shall mean the Transmission Provider's Interconnection Facilities and the Interconnection Customer's Interconnection Facilities. Collectively, Interconnection Facilities include all facilities and equipment between the Generating Facility and the Point of Interconnection, including any modification, additions or upgrades that are necessary to physically and electrically interconnect the Generating Facility to the Transmission Provider's Transmission System. Interconnection Facilities are sole use facilities (e.g. for generator interconnection) and shall not include Distribution Upgrades, Stand Alone Network Upgrades or Network Upgrades. Interconnection Facilities may be shared by more than one Generating Facility.

Interconnection Facilities Study shall mean a study conducted by the Transmission Provider or a third party consultant for the Interconnection Customer to determine a list of facilities (including Transmission Provider's Interconnection Facilities and Network Upgrades as identified in the Serial Interconnection System Impact Study or the Definitive Interconnection System Impact Study), the cost of those facilities, and the time required to interconnect the Generating Facility with the Transmission Provider's Transmission System. The scope of the study is defined in Section 11 of the Standard Large Generator Interconnection Procedures.

Interconnection Facilities Study Agreement shall mean the form of agreement contained in Appendix 7 of the Standard Large Generator Interconnection Procedures for conducting the Interconnection Facilities Study.

Interconnection Feasibility Study shall mean a preliminary evaluation of the system impact and cost of interconnecting the Generating Facility to the Transmission Provider's Transmission System, the scope of which is described in Section 8 of the Standard Large Generator Interconnection Procedures.

Interconnection Feasibility Study Agreement shall mean the form of agreement contained in Appendix 4 of the Standard Large Generator Interconnection Procedures for conducting the Interconnection Feasibility Study.

Interconnection Request shall mean an Interconnection Customer's request, in the form of Appendix 3 to the Standard Large Generator Interconnection Procedures, in accordance with the Tariff, to interconnect a new Generating Facility, or to increase the capacity of, or make a Material Modification to

the operating characteristics of, an existing Generating Facility that is interconnected with the Transmission Provider's Transmission System.

Interconnection Service shall mean the service provided by the Transmission Provider associated with interconnecting the Interconnection Customer's Generating Facility to the Transmission Provider's Transmission System and enabling it to receive electric energy and capacity from the Generating Facility at the Point of Interconnection, pursuant to the terms of the Standard Large Generator Interconnection Agreement and, if applicable, the Transmission Provider's Tariff.

Interconnection Study shall mean any of the following studies: the Interconnection Feasibility Study, the Serial Interconnection System Impact Study, the Definitive Interconnection System Impact Study, and the Interconnection Facilities Study described in the Standard Large Generator Interconnection Procedures. The Transmission Provider shall undertake Interconnection Studies pursuant to either a Serial Interconnection Study Process or a Definitive Interconnection Study Process as described in these Large Generator Interconnection Procedures.

Interconnection Study Agreement shall mean any of the following agreements: the Interconnection Feasibility Study, the Definitive Interconnection System Impact Study Agreement, the Serial Interconnection System Impact Study Agreement or the Interconnection Facilities Study Agreement described in these Large Generator Interconnection Procedures.

IRS shall mean the Internal Revenue Service.

Joint Operating Committee shall be a group made up of representatives from Interconnection Customers and the Transmission Provider to coordinate operating and technical considerations of Interconnection Service.

Large Generating Facility shall mean a Generating Facility having a Generating Facility Capacity of more than 20 MW.

Loss shall mean any and all losses relating to injury to or death of any person or damage to property, demand, suits, recoveries, costs and expenses, court costs, attorney fees, and all other obligations by or to third parties, arising out of or resulting from the other Party's performance, or non-performance of its obligations under the Standard Large Generator Interconnection Agreement on behalf of the indemnifying Party, except in cases of gross negligence or intentional wrongdoing by the indemnifying Party.

Material Modification shall mean (1) in the Serial Interconnection Study Process, those modifications that have a material impact on the cost or timing of any Interconnection Request with a later queue priority date and (2) in the Definitive Interconnection Study Process, those modifications that have a material impact on the cost or timing of any Interconnection Request with (a) a later Queue Position or (b) a Queue Position which is included in the same Cluster.

Metering Equipment shall mean all metering equipment installed or to be installed at the Generating Facility pursuant to the Standard Large Generator Interconnection Agreement at the metering points, including but not limited to instrument transformers, MWh-meters, data acquisition equipment, transducers, remote terminal unit, communications equipment, phone lines, and fiber optics.

NERC shall mean the North American Electric Reliability Council or its successor organization.

Network Resource shall mean any designated generating resource owned, purchased, or leased by a Network Customer under the Network Integration Transmission Service Agreement. Network Resources do not include any resource, or any portion thereof, that is committed for sale to third parties or otherwise cannot be called upon to meet the Network Customer's Network Load on a non-interruptible basis.

Network Resource Interconnection Service ("NRIS") shall mean an Interconnection Service that allows the Interconnection Customer to integrate its Large Generating Facility with the Transmission Provider's Transmission System (1) in a manner comparable to that in which the Transmission Provider integrates its generating facilities to serve native load customers; or (2) in an RTO or ISO with market based congestion management, in the same manner as Network Resources. Network Resource Interconnection Service in and of itself does not convey transmission service.

Network Upgrades shall mean the additions, modifications, and upgrades to the Transmission Provider's Transmission System required at or beyond the point at which the Interconnection Facilities connect to the Transmission Provider's Transmission System to accommodate the interconnection of the Large Generating Facility to the Transmission Provider's Transmission System.

Notice of Dispute shall mean a written notice of a dispute or claim that arises out of or in connection with the Standard Large Generator Interconnection Agreement or its performance.

OASIS shall mean the Transmission Provider's Open Access Same-Time Information System.

Optional Interconnection Study shall mean a sensitivity analysis based on assumptions specified by the Interconnection Customer in the Optional Interconnection Study Agreement.

Optional Interconnection Study Agreement shall mean the form of agreement contained in Appendix 9 of the Standard Large Generator Interconnection Procedures for conducting the Optional Interconnection Study.

Party or Parties shall mean Transmission Provider, Transmission Owner, Interconnection Customer or any combination of the above.

Permissible Technological Advancement shall mean modification to equipment that (1) results in electrical performance that is equal to or better than the electrical performance expected prior to the technology change, (2) does not cause any reliability concerns, (3) does not degrade the electrical characteristics of the generating equipment (e.g., the ratings, impedances, efficiencies, capabilities, and performance of the equipment under steady-state and dynamic conditions) and (4) does not have a material impact on the cost or timing of any Interconnection Request with a later queue priority date, and is therefore not a Material Modification. A Permissible Technological Advancement is a change in equipment that may achieve cost or grid performance efficiencies that may include turbines, inverters, plant supervisory controls or other devices but does not include changes in generation technology type or fuel type.

Phase ("Phase 1", "Phase 2", or "Phase 3") shall mean a distinct part of the Definitive Interconnection System Impact Study Process as described in Section 10.8 herein.

Point of Change of Ownership shall mean the point, as set forth in Appendix A to the Standard Large Generator Interconnection Agreement, where the Interconnection Customer's Interconnection Facilities connect to the Transmission Provider's Interconnection Facilities.

Point of Interconnection shall mean the point, as set forth in Appendix A to the Standard Large Generator Interconnection Agreement, where the Interconnection Facilities connect to the Transmission Provider's Transmission System.

Provisional Interconnection Service shall mean Interconnection Service provided by Transmission Provider associated with interconnecting the Interconnection Customer's Generating Facility to Transmission Provider's Transmission System and enabling that Transmission System to receive electric energy and capacity from the Generating Facility at the Point of Interconnection, pursuant to the terms of the Provisional Large Generator Interconnection Agreement and, if applicable, the Tariff.

Provisional Large Generator Interconnection Agreement shall mean the interconnection agreement for Provisional Interconnection Service established between Transmission Provider and/or the Transmission Owner and the Interconnection Customer. This agreement shall take the form of the Large Generator Interconnection Agreement, modified for provisional purposes.

Queue shall mean a queue for valid Interconnection Requests for the Serial Interconnection Study Process or the Definitive Interconnection Study Process.

Queue Position shall mean the order of a valid Interconnection Request, relative to all other pending valid Interconnection Requests, in either the Serial Interconnection Study Process or the Definitive Interconnection Study Process. In the Serial Interconnection Study Process, the Queue Position is established based upon the date and time of receipt of the valid Interconnection Request by the Transmission Provider. Where a Transmission Provider is administering a Definitive Interconnection Study Process, all Interconnection Requests studied in a single Cluster shall be considered equally queued but Clusters initiated earlier in time shall be considered to have an earlier Queue Position than clusters initiated later. The Queue Position of an Interconnection Request shall have no bearing on the allocation of the cost of the common Network Upgrades identified in the applicable Cluster Study (such costs will be allocated among Interconnection Requests in accordance with Section 10.4).

Readiness Milestone(s) shall have the meaning set forth in Section 10.11 of the LGIP.

Reasonable Efforts shall mean, with respect to an action required to be attempted or taken by a Party under the Standard Large Generator Interconnection Agreement, efforts that are timely and consistent with Good Utility Practice and are otherwise substantially equivalent to those a Party would use to protect its own interests.

Resource Plan shall mean any process authorized or required by Applicable Laws and Regulations for, *inter alia*, the selection of Generating Facilities interconnected to the Transmission System of Transmission Provider.

Resource Planning Entity shall mean any entity required to develop a Resource Plan or conduct a Resource Solicitation Process.

Resource Solicitation Cluster shall mean a Cluster Study associated with a Resource Plan or related process.

Resource Solicitation Process shall mean any process authorized or required by Applicable Laws and Regulations for the acquisition of Network Resources.

Scoping Meeting shall mean the meeting between representatives of the Interconnection Customer and Transmission Provider conducted for the purpose of discussing the proposed Interconnection Request, alternative interconnection options, to exchange information including any transmission data and earlier study evaluations that would be reasonably expected to affect such interconnection options, to analyze such information, and to determine the potential feasible Points of Interconnection.

Serial Interconnection Study Process shall mean the process of studying Interconnection Requests on a serial basis inclusive of the Interconnection Feasibility Study, the Serial Interconnection System Impact Study, the Interconnection Facilities Study, and the Optional Interconnection Study Process.

Serial Interconnection System Impact Study shall mean an engineering study that evaluates the impact of the proposed interconnection on the safety and reliability of Transmission Provider's Transmission System and, if applicable, an Affected System. The study shall identify and detail the system impacts that would result if the Generating Facility were interconnected without project modifications or system modifications, focusing on the Adverse System Impacts identified in the Interconnection Feasibility Study, or to study potential impacts, including but not limited to those identified in the Scoping Meeting as described in the Standard Large Generator Interconnection Procedures.

Serial Interconnection System Impact Study Agreement shall mean the form of agreement contained in Appendix 5 of the Standard Large Generator Interconnection Procedures for conducting the Interconnection System Impact Study.

Site Control shall mean the exclusive land right to develop, construct, operate, and maintain the Generating Facility over the term of expected operation of the Generating Facility. Site Control shall include the right to develop, construct, operate, and maintain Interconnection Customer's Interconnection Facilities. Site Control may be demonstrated by documentation establishing: (1) ownership of, a leasehold interest in, or a right to develop a site of sufficient size to construct and operate the Generating Facility and associated Interconnection Customer's Interconnection Facilities; (2) an option to purchase or acquire a leasehold interest in a site of sufficient size to construct and operate the Generating Facility and associated Interconnection Facilities; or (3) any other documentation that clearly demonstrates the right of the Interconnection Customer to exclusively occupy a site of sufficient size to construct and operate the Generating Facility. Site Control for any co-located project is demonstrated by a contract or other agreement demonstrating shared land use for all co-located projects that meet the aforementioned provisions of this Site Control definition.

Small Generating Facility shall mean a Generating Facility that has a Generating Facility Capacity of no more than 20 MW.

Stand Alone Network Upgrades shall mean Network Upgrades that are not part of an Affected System that an Interconnection Customer may construct without affecting day-to-day operations of the Transmission System during their construction. Both the Transmission Provider and the Interconnection Customer must agree as to what constitutes Stand Alone Network Upgrades and identify them in Appendix A to the Standard Large Generator Interconnection Agreement. If the Transmission Provider and Interconnection Customer disagree about whether a particular Network Upgrade is a Stand Alone Network Upgrade, the Transmission Provider must provide the Interconnection Customer a written technical explanation outlining why the Transmission Provider does not consider the Network Upgrade to be a Stand Alone Network Upgrade within 15 days of its determination.

Standard Large Generator Interconnection Agreement (LGIA) shall mean the form of interconnection agreement applicable to an Interconnection Request pertaining to a Large Generating Facility that is included in the Transmission Provider's Tariff.

Standard Large Generator Interconnection Procedures (LGIP) shall mean the interconnection procedures applicable to an Interconnection Request pertaining to a Large Generating Facility that are included in the Transmission Provider's Tariff.

Surplus Interconnection Service shall mean any unneeded portion of Interconnection Service established in a Large Generator Interconnection Agreement, such that if Surplus Interconnection Service is utilized, the total amount of Interconnection Service at the Point of Interconnection would remain the same.

System Protection Facilities shall mean the equipment, including necessary protection signal communications equipment, required to protect (1) the Transmission Provider's Transmission System from faults or other electrical disturbances occurring at the Generating Facility and (2) the Generating Facility from faults or other electrical system disturbances occurring on the Transmission Provider's Transmission System or on other delivery systems or other generating systems to which the Transmission Provider's Transmission System is directly connected.

Tariff shall mean the Transmission Provider's Tariff through which open access transmission service and Interconnection Service are offered, as filed with FERC, and as amended or supplemented from time to time, or any successor tariff.

Transmission Owner shall mean an entity that owns, leases or otherwise possesses an interest in the portion of the Transmission System at the Point of Interconnection and may be a Party to the Standard Large Generator Interconnection Agreement to the extent necessary.

Transmission Provider shall mean the public utility (or its designated agent) that owns, controls, or operates transmission or distribution facilities used for the transmission of electricity in interstate commerce and provides transmission service under the Tariff. The term Transmission Provider should be read to include the Transmission Owner when the Transmission Owner is separate from the Transmission Provider.

Transmission Provider's Interconnection Facilities shall mean all facilities and equipment owned, controlled, or operated by the Transmission Provider from the Point of Change of Ownership to the Point of Interconnection as identified in Appendix A to the Standard Large Generator Interconnection Agreement, including any modifications, additions or upgrades to such facilities and equipment. Transmission Provider's Interconnection Facilities are sole use facilities and shall not include Distribution Upgrades, Stand Alone Network Upgrades or Network Upgrades. Transmission Provider’s Interconnection Facilities may be shared by more than one Generating Facility in a given study.

Transmission System shall mean the facilities owned, controlled or operated by the Transmission Provider or Transmission Owner that are used to provide transmission service under the Tariff.

Trial Operation shall mean the period during which Interconnection Customer is engaged in on-site test operations and commissioning of the Generating Facility prior to Commercial Operation.

Withdrawal Penalty shall have the meaning set forth in Section 4.7.1 of the LGIP.

Section 2. Scope and Application.

2.1 Application of Standard Large Generator Interconnection Procedures.

Sections 2 through 16 apply to processing an Interconnection Request pertaining to a Large Generating Facility. As provided in Attachment M to the Tariff, Small Generating Facilities that are not eligible for the fast track process (as defined therein) will be processed in a single Queue with Large Generating Facilities. Additionally, Small Generating Facilities requesting NRIS shall be processed under this LGIP.

The study process applicable to all Interconnection Requests subject to these Procedures is dependent upon whether the Transmission Provider is implementing a Serial Interconnection Study Process or has transitioned to a Definitive Interconnection Study Process, as provided for in Section 7 and as detailed in these Large Generator Interconnection Procedures. Where the Transmission Provider transitions to a Definitive Interconnection Study Process, Interconnection Customers with Generating Facilities located in the Transmission Provider's Control Area and requesting Interconnection Service under this LGIP shall adhere to the Definitive Interconnection Study Process provisions of these Procedures and shall not be subject to the Serial Interconnection Study Process provisions herein. The Transmission Provider shall publicize its intent to transition to the Definitive Interconnection Study Process in Section 10 by posting notice to the OASIS website (the date of posting to be known as the "Cluster Study transition notice date") pursuant to Section 7. Such notice shall not be published until after approval of the revised LGIP by FERC. After the Transmission Provider publicizes its intent to transition to the Definitive Interconnection Study Process in Section 10 by posting notice to the OASIS website, the Transmission Provider may not at any time thereafter return to the *pro forma* Serial Interconnection Study Process.

The Informational Interconnection Study process in Section 3 is available only where the Transmission Provider is implementing a Definitive Interconnection Study Process. The Optional Interconnection Study Process in Section 13 is available only where the Transmission Provider is implementing a Serial Interconnection Study Process.

2.2 Comparability.

Transmission Provider shall receive, process and analyze all Interconnection Requests in a timely manner as set forth in this LGIP. Transmission Provider will use the same Reasonable Efforts in processing and analyzing Interconnection Requests from all Interconnection Customers, whether the Generating Facilities are owned by Transmission Provider, its subsidiaries or Affiliates or others.

2.3 Base Case Data.

Transmission Provider shall maintain base power flow, short circuit and stability databases, including all underlying assumptions, and contingency list on either its OASIS site or a password-protected website, subject to confidentiality provisions in LGIP Section 16.1. In addition, Transmission Provider shall maintain network models and underlying assumptions on either its OASIS site or a password-protected website. Such network models and underlying assumptions should reasonably represent those used during the most recent Interconnection Study and be representative of current system conditions. If Transmission Provider posts this information on a password-protected website, a link to the information must be provided on Transmission Provider's OASIS site. Transmission Provider is permitted to require that Interconnection Customers, OASIS site users and password-protected website users sign a confidentiality agreement before the release of commercially

sensitive information or Critical Energy Infrastructure Information in the Base Case data. Such databases and lists, hereinafter referred to as Base Cases, shall include all (1) generation projects and (2) transmission projects, including merchant transmission projects that are proposed for the Transmission System for which a transmission expansion plan has been submitted and approved by the applicable authority.

2.4 No Applicability to Transmission Service.

Nothing in this LGIP shall constitute a request for transmission service or confer upon an Interconnection Customer any right to receive transmission service.

Section 3. Definitive Interconnection Study Process – Informational Interconnection Study.

3.1 Informational Interconnection Study Agreement.

At any time, a prospective Interconnection Customer may request, and Transmission Provider (either itself or through a third-party subcontractor or consultant) authorized and opting to administer a Definitive Interconnection Study Process shall perform one or more Informational Interconnection Studies. Interconnection Customer shall submit a separate Informational Interconnection Study Request for each site and may submit multiple Informational Interconnection Study Requests for different Generating Facility sizes or configurations at a single site. An Informational Interconnection Study Request to evaluate one site at two different voltage levels shall be treated as two Informational Interconnection Study Requests. Any one Interconnection Customer (including affiliates) shall have no more than five (5) requests for Informational Interconnection Study reports pending at one time. Interconnection Customer must submit a deposit with each Informational Interconnection Study Request even when more than one request is submitted for a single site.

The request shall use the form in Appendix 1 of the LGIP and shall describe the assumptions that Interconnection Customer wishes Transmission Provider to study within the scope described in Section 3.2 of the LGIP below. Within five (5) Business Days after receipt of a request for an Informational Interconnection Study, Transmission Provider shall provide to Interconnection Customer an Informational Interconnection Study Agreement in the form of Appendix 2, including a non-binding good faith estimate of the timing and cost of completing the Informational Interconnection Study. Notwithstanding the above, the Transmission Provider shall not be required as a result of an Informational Interconnection Study Request to conduct any additional Interconnection Studies with respect to any other Interconnection Request.

Interconnection Customer shall execute the Informational Interconnection Study Agreement within ten (10) Business Days of receipt of an agreed upon scope of work and deliver the Informational Interconnection Study Agreement, the technical data, and a $10,000 deposit to Transmission Provider. The Transmission Provider shall then countersign and return the Informational Interconnection Study Agreement within ten (10) Business Days of receipt.

3.2 Scope of Informational Interconnection Study.

The intent of the Informational Interconnection Study is to aid Interconnection Customer in its business decisions related to interconnection of Generating Facilities prior to entering the Definitive Interconnection Study Process. The Informational Interconnection Study shall consist of analysis based on the assumptions and scope of work specified by Interconnection Customer in the Informational Interconnection Study Agreement. The Informational

Interconnection Study shall preliminarily identify the potential Transmission Provider's Interconnection Facilities and the Network Upgrades, and the estimated cost thereof, that may be required to provide transmission service or Interconnection Service based upon the results and assumptions of the Informational Interconnection Study. The Informational Interconnection Study shall be performed solely for informational purposes and is non-binding and does not confer any rights, as the Interconnection Customer must still successfully apply to interconnect to the Transmission Provider's System. Transmission Provider shall utilize existing studies to the extent practicable in conducting the Informational Interconnection Study.

3.3 Informational Interconnection Study Procedures.

The executed Informational Interconnection Study Agreement, the deposit, and technical and other data called for therein must be provided to Transmission Provider within ten (10) Business Days of Interconnection Customer's receipt of the Informational Interconnection Study Agreement. Transmission Provider shall use Reasonable Efforts to complete the Informational Interconnection Study within a mutually agreed upon time period specified within the Informational Interconnection Study Agreement. If Transmission Provider is unable to complete the Informational Interconnection Study within such time period, it shall notify Interconnection Customer and provide an estimated completion date and an explanation of the reasons why additional time is required. Any difference between the study payment and the actual cost of the study shall be paid to Transmission Provider or refunded to Interconnection Customer, as appropriate. Upon request, Transmission Provider shall provide Interconnection Customer supporting documentation and work papers and databases or data developed in the preparation of the Informational Interconnection Study, subject to confidentiality arrangements consistent with Section 16.1.

Section 4. Interconnection Requests.

4.1 General.

4.1.1 Serial Interconnection Study Deposit and Process.

An Interconnection Customer shall submit to Transmission Provider an Interconnection Request in the form of Appendix 3 to this LGIP and a refundable deposit of $10,000 where the Transmission Provider is administering a Serial Interconnection Study Process. Transmission Provider shall apply the deposit toward the cost of an Interconnection Feasibility Study. Interconnection Customer shall submit a separate Interconnection Request for each site and may submit multiple Interconnection Requests for a single site. Interconnection Customer must submit a deposit with each Interconnection Request even when more than one request is submitted for a single site. An Interconnection Request to evaluate one site at two different voltage levels shall be treated as two Interconnection Requests.

At Interconnection Customer's option, Transmission Provider and Interconnection Customer will identify alternative Point(s) of Interconnection and configurations at the Scoping Meeting to evaluate in this process and attempt to eliminate alternatives in a reasonable fashion given resources and information available. Interconnection Customer will select the definitive Point(s) of Interconnection to be studied no later than the execution of the Interconnection Feasibility Study Agreement.

Transmission Provider shall have a process in place to consider requests for Interconnection Service below the Generating Facility Capacity. These requests for Interconnection Service shall be studied at the level of Interconnection Service requested for purposes of Interconnection Facilities and Network Upgrades, and associated costs, but may be subject to other studies at the full Generating Facility Capacity to ensure safety and reliability of the system, with the study costs borne by the Interconnection Customer. If after the additional studies are complete, Transmission Provider determines that additional Network Upgrades are necessary, then Transmission Provider must: (1) specify which additional Network Upgrade costs are based on which studies; and (2) provide a detailed explanation of why the additional Network Upgrades are necessary. Any Interconnection Facility and/or Network Upgrade costs required for safety and reliability also will be borne by the Interconnection Customer. Interconnection Customers may be subject to additional control technologies as well as testing and validation of those technologies consistent with Article 6 of the LGIA. The necessary control technologies and protection systems shall be established in Appendix C of the executed, or requested to be filed unexecuted, LGIA.

4.1.2 Definitive Interconnection Study Deposit and Process.

Where the Transmission Provider is administering a Definitive Interconnection Study Process, an Interconnection Customer shall submit to Transmission Provider an Interconnection Request in the form of Appendix 3 to this LGIP, an application fee of $5,000, and a study deposit in cash based upon the requested capacity of the Generating Facility:

a. $20,000 plus one dollar ($1.00) per kWac for requests < 20 MW, or

b. $35,000 plus one dollar ($1.00) per kWac for requests ≥ 20 MW < 50 MW, or

c. $50,000 plus one dollar ($1.00) per kWac for requests ≥ 50 MW< 80MW, or

d. $150,000 for requests ≥ 80 MW < 200 MW, or

e. $250,000 for requests ≥ 200 MW.

Transmission Provider shall apply the deposit toward the cost of administering the Definitive Interconnection Study Process as well as any Network Upgrades and Interconnection Facilities, including overheads under a future Interconnection Agreement. Interconnection Customer shall submit a separate Interconnection Request for each site and may submit multiple Interconnection Requests for a single site. Interconnection Customer must submit a deposit with each Interconnection Request even when more than one request is submitted for a single site. Interconnection Customers evaluating different options (such as different sizes, sites, or voltages) are encouraged but not required to use the Informational Interconnection Process (Section 3) before entering the Definitive Interconnection Study Process.

4.2 Identification of Types of Interconnection Services.

4.2.1 Serial Interconnection Study Process.

At the time the Interconnection Request is submitted, Interconnection Customer must request either Energy Resource Interconnection Service or Network Resource Interconnection Service, as described; provided, however, any Interconnection Customer requesting Network Resource Interconnection Service may also request that it be concurrently studied for Energy

Resource Interconnection Service, up to the point when an Interconnection Facility Study Agreement is executed. Interconnection Customer may then elect to proceed with Network Resource Interconnection Service or to proceed under a lower level of interconnection service to the extent that only certain upgrades will be completed.

4.2.2 Definitive Interconnection Study Process.

At the time the Interconnection Request is submitted, Interconnection Customer must request either Energy Resource Interconnection Service or Network Resource Interconnection Service; provided, however, any Interconnection Customer requesting Network Resource Interconnection Service may also request that it be concurrently studied for Energy Resource Interconnection Service prior to DISIS Phase 3 but must designate either ERIS or NRIS no later than five business days after the DISIS Phase 2 Report Meeting described in Section 10.8(c).

4.2.3 Energy Resource Interconnection Service.

4.2.3.1 The Product. Energy Resource Interconnection Service allows Interconnection Customer to connect the Large Generating Facility to the Transmission System and be eligible to deliver the Large Generating Facility's output using the existing firm or non-firm capacity of the Transmission System on an "as available" basis. Energy Resource Interconnection Service does not in and of itself convey any right to deliver electricity to any specific customer or Point of Delivery.

4.2.3.2 The Study. The study consists of short circuit/fault duty, steady state (thermal and voltage) and stability analyses. The short circuit/fault duty analysis would identify direct Interconnection Facilities required and the Network Upgrades necessary to address short circuit issues associated with the Interconnection Facilities. The stability and steady state studies would identify necessary upgrades to allow full output of the proposed Large Generating Facility and would also identify the maximum allowed output, at the time the study is performed, of the interconnecting Large Generating Facility without requiring additional Network Upgrades.

4.2.4 Network Resource Interconnection Service.

4.2.4.1 The Product. Transmission Provider must conduct the necessary studies and construct the Network Upgrades needed to integrate the Large Generating Facility (1) in a manner comparable to that in which Transmission Provider integrates its generating facilities to serve native load customers; or (2) in an ISO or RTO with market-based congestion management, in the same manner as Network Resources. Network Resource Interconnection Service allows Interconnection Customer's Large Generating Facility to be designated as a Network Resource, up to the Large Generating Facility's full output, on the same basis as existing Network Resources interconnected to Transmission Provider's Transmission System, and to be studied as a Network Resource on the assumption that such a designation will occur.

4.2.4.2 The Study. The Interconnection Study for Network Resource Interconnection Service shall assure that Interconnection Customer's Large Generating Facility meets the requirements for Network Resource Interconnection Service and as a general matter, that such Large Generating Facility's interconnection is also

studied with Transmission Provider's Transmission System at peak load, under a variety of severely stressed conditions, to determine whether, with the Large Generating Facility at full output, the aggregate of generation in the local area can be delivered to the aggregate of load on Transmission Provider's Transmission System, consistent with Transmission Provider's reliability criteria and procedures. This approach assumes that some portion of existing Network Resources' output is displaced by the output of Interconnection Customer's Large Generating Facility. Network Resource Interconnection Service in and of itself does not convey any right to deliver electricity to any specific customer or Point of Delivery. The Transmission Provider may also study the Transmission System under non-peak load conditions. However, upon request by the Interconnection Customer, the Transmission Provider must explain in writing to the Interconnection Customer why the study of non-peak load conditions is required for reliability purposes.

4.3 Utilization of Surplus Interconnection Service.

Transmission Provider must provide a process that allows an Interconnection Customer to utilize or transfer Surplus Interconnection Service at an existing Point of Interconnection. The original Interconnection Customer or one of its affiliates shall have priority to utilize Surplus Interconnection Service. If the existing Interconnection Customer or one of its affiliates does not exercise its priority, then that service may be made available to other potential Interconnection Customers.

4.3.1 Surplus Interconnection Service Requests.

Surplus Interconnection Service requests may be made by the existing Interconnection Customer whose Generating Facility is already interconnected or one of its affiliates. Surplus Interconnection Service requests also may be made by another Interconnection Customer.

Transmission Provider shall use the process in Section 4.3.2 in evaluating Interconnection Requests for Surplus Service. Studies for Surplus Interconnection Service shall consist of reactive power, short circuit/fault duty, stability analyses, and any other appropriate studies. Steady-state (thermal/voltage) analyses may be performed as necessary to ensure that all required reliability conditions are studied. If the Surplus Interconnection Service was not studied under off-peak conditions, off-peak steady state analyses shall be performed to the required level necessary to demonstrate reliable operation of the Surplus Interconnection Service. If the original System Impact Study is not available for the Surplus Interconnection Service, both off-peak and peak analysis may need to be performed for the existing Generating Facility associated with the request for Surplus Interconnection Service. The reactive power, short circuit/fault duty, stability, and steady-state analyses for Surplus Interconnection Service will identify any additional Interconnection Facilities and/or Network Upgrades necessary.

4.3.2 Process for Surplus Interconnection Service Requests.

An existing Interconnection Customer, whose facility is already interconnected, may submit a request for Surplus Interconnection Service by using the process outlined in this Section 4.3.2. The original Large Generator Interconnection Customer may retain the surplus for itself, or may make it available to an Affiliate or any other entity.

A. The existing Interconnection Customer, or an Affiliate, may make a Request for Surplus Interconnection Service, by submitting a complete request in the form of Appendix 3 to this LGIP, and a deposit for $10,000. Another entity may make a

request, but must include concurrence from the existing Large Generator Interconnection Customer that they are willing to assign Surplus Interconnection Service to the entity ("Surplus Interconnection Customer", regardless of which type). The deposit shall be applied toward any Interconnection Studies pursuant to the Surplus Interconnection Request.

B. A Surplus Interconnection Request will not be considered to be a valid request until all items in Section 4.3.2(A.) have been received and deemed adequate by Transmission Provider. If an Interconnection Request fails to meet the requirements set forth in Section 4.3.2(A.), Transmission Provider shall notify the Surplus Interconnection Customer within five (5) Business Days of receipt of the initial Surplus Interconnection Request of the reasons for such failure and that the Surplus Interconnection Request does not constitute a valid request.

C. Transmission Provider shall acknowledge receipt of the Surplus Interconnection Request within five (5) Business Days of receipt of the request. Transmission Provider shall process the Surplus Interconnection Request outside of the non-Surplus Interconnection queue.

D. Transmission Provider shall tender a Surplus Interconnection Study Agreement to the Surplus Interconnection Customer within 30 Business Days of the original request if no deficiencies or within 30 Business Days from the time deficiencies in the application are cured by the Surplus Interconnection Customer.

E. Surplus Interconnection Customer shall execute the Surplus Interconnection Study Agreement and return to the Transmission Provider, along with a $50,000 study deposit.

F. The Transmission Provider will perform the Surplus Interconnection Study by performing a System Impact Study phase within 60 Business Days and, if necessary, a Facilities Study phase within an additional 90 Business Days.

G. After the Surplus Interconnection Study, the Transmission Provider will provide the results to the Surplus Interconnection Customer and, if applicable, to the original Interconnection Customer.

H. Within 10 Business Days of delivering the study results, the Transmission Provider will schedule a Customer meeting to discuss the results of the studies with the Surplus Interconnection Customer and, if applicable, with the original Interconnection Customer.

I. Within 30 days of the Customer meeting, Transmission Provider will prepare the amendments to the Surplus Interconnection Agreement, which will take the form of an LGIA, and deliver them to the Surplus Interconnection Customer and, if applicable, to the original Interconnection Customer.

J. A 60-day negotiation period will occur to finalize timelines and financial aspects. In the event that the negotiations fail to result in an agreement, the Surplus Interconnection Customer may direct the Transmission Provider that the agreement be filed with the FERC unexecuted.

K. Surplus Interconnection Service cannot be offered unless the original Large Generator Interconnection Customer's Interconnection Facilities, Network Upgrades and any identified Contingent Network Upgrades identified in the original LGIA are In Service. Surplus Service cannot be granted to the Surplus Interconnection Customer if the Surplus Interconnection Study indicates additional Network Upgrades would be needed.

L. Requests for Surplus Interconnection Service cannot exceed the original Interconnected MW amount, and must be for either the same service (ERIS or NRIS) or, if the original LGIA was for NRIS, then the Surplus Interconnection Customer could request the lower level ERIS service if desired.

4.4 Valid Interconnection Request.

4.4.1 Initiating an Interconnection Request in the Serial Interconnection Study Process. To initiate an Interconnection Request, Interconnection Customer must submit all of the following: (i) a $10,000 deposit, (ii) a completed application in the form of Appendix 3, and (iii) demonstration of Site Control or a posting of an additional deposit of $10,000. Such deposits shall be applied toward any Interconnection Studies pursuant to the Interconnection Request. If Interconnection Customer demonstrates Site Control within the cure period specified in Section 4.4.4 after submitting its Interconnection Request, the additional deposit shall be refundable; otherwise, all such deposit(s), additional and initial, become non-refundable.

The expected In-Service Date of the new Large Generating Facility or increase in capacity of the existing Generating Facility shall be no more than the process window for the regional expansion planning period (or in the absence of a regional planning process, the process window for Transmission Provider's expansion planning period) not to exceed seven years from the date the Interconnection Request is received by Transmission Provider, unless Interconnection Customer demonstrates that engineering, permitting and construction of the new Large Generating Facility or increase in capacity of the existing Generating Facility will take longer than the regional expansion planning period. The In-Service Date may succeed the date the Interconnection Request is received by Transmission Provider by a period up to ten years, or longer where Interconnection Customer and Transmission Provider agree, such agreement not to be unreasonably withheld.

4.4.2 Initiating an Interconnection Request in the Definitive Interconnection Study Process. An Interconnection Customer wishing to join the Definitive Interconnection Study Process shall submit its Interconnection Request to the Transmission Provider within, and no later than the close of the annual DISIS Request Window. To initiate an Interconnection Request, the Interconnection Customer must submit all of the following:

a. The study deposit described in Section 4.1.2;

b. A completed application in the form of Appendix 3 to the LGIP (including applicable technical information);

c. A demonstration of Site Control as defined in Section 1 of the LGIP. Specifications for acceptable site size for the purposes of demonstrating Site Control are posted on

Transmission Provider's OASIS website. Interconnection Customer may propose alternative specifications for site size to those posted on OASIS for Transmission Provider's approval. In the event that the Transmission Provider and the Interconnection Customer cannot reach agreement related to adequacy of site size, Transmission Prover will accept a Professional Engineer (licensed in State of service) stamped site plan drawing that depicts the proposed generation arrangement and specifies the maximum facility output for that arrangement. Interconnection Customer may provide a cash deposit equal to $20,000 plus $500/MW in lieu of Site Control to enter Phase 1. A deposit in lieu of Site Control is not accepted for later Phases of the Definitive Interconnection Study Process;

d. A Point of Interconnection;

e. If the request is for NRIS and if Transmission Provider has not been notified pursuant to Section 29.2 of Part III of the Tariff that Interconnection Customer's proposed Generating Facility is to be designated as a Network Resource within Transmission Provider's Control Area, the point of delivery or the geographic location on Transmission Provider's Transmission System at which Interconnection Customer intends to deliver output out of Transmission Provider's Control Area; and

f. The requested capacity of the Generating Facility.

Interconnection Customer shall select the definitive Point of Interconnection to be studied no later than the execution of the Definitive System Impact Study Agreement. For purposes of clustering Interconnection Requests, Transmission Provider may make reasonable changes to the requested Point(s) of Interconnection to facilitate efficient interconnection of Interconnection Customers at common points of interconnection. Transmission Provider shall notify Interconnection Customer(s) in writing of any intended changes to the requested Point(s) of Interconnection and the Point(s) of Interconnection shall only change upon mutual agreement.

Transmission Provider shall have a process in place to consider requests for Interconnection Service below the Generating Facility Capacity. These requests for Interconnection Service shall be studied at the level of Interconnection Service requested for purposes of Interconnection Facilities and Network Upgrades, and associated costs, but may be subject to other studies at the full Generating Facility Capacity to ensure safety and reliability of the Transmission System, with the study costs borne by the Interconnection Customer. If after the additional studies are complete, Transmission Provider determines that additional Network Upgrades are necessary, then Transmission Provider must: (1) specify which additional Network Upgrade costs are based on which studies; and (2) provide a detailed explanation of why the additional Network Upgrades are necessary. Any Interconnection Facility and/or Network Upgrade costs required for safety and reliability also will be borne by the Interconnection Customer. Interconnection Customers may be subject to additional control technologies as well as testing and validation of those technologies consistent with Article 6 of the LGIA. The necessary control technologies and protection systems shall be established in Appendix C of the executed, or requested to be filed unexecuted, LGIA.

The expected In-Service Date of the new Large Generating Facility or increase in capacity of the existing Generating Facility shall be no more than the process window for the regional expansion planning period (or in the absence of a regional planning process, the process

window for Transmission Provider's expansion planning period) not to exceed (7) seven years from the date the Interconnection Request is received by Transmission Provider, unless Interconnection Customer demonstrates that engineering, permitting and construction of the new Large Generating Facility or increase in capacity of the existing Generating Facility will take longer than the regional expansion planning period. The In-Service Date may succeed the date the Interconnection Request is received by Transmission Provider by a period up to (10) ten years, or longer where Interconnection Customer and Transmission Provider agree, such agreement not to be unreasonably withheld.

4.4.3 Acknowledgment of Interconnection Request.

Transmission Provider shall acknowledge receipt of the Interconnection Request within five (5) Business Days of receipt of the request and attach a copy of the received Interconnection Request to the acknowledgement.

4.4.4 Deficiencies in Interconnection Request Under the Serial Interconnection Study Process.

An Interconnection Request will not be considered to be a valid request until all items in Section 4.4.1 have been received by Transmission Provider. If an Interconnection Request fails to meet the requirements set forth in Section 4.4.1, Transmission Provider shall notify Interconnection Customer within five (5) Business Days of receipt of the initial Interconnection Request of the reasons for such failure and that the Interconnection Request does not constitute a valid request. Interconnection Customer shall provide Transmission Provider the additional requested information needed to constitute a valid request within ten (10) Business Days after receipt of such notice. Failure by Interconnection Customer to comply with this Section 4.4.4 shall be treated in accordance with Section 4.7.

4.4.5 Deficiencies in Interconnection Request Under the Definitive Interconnection Study Process.

An Interconnection Request will not be considered to be a valid request until all items in Section 4.4.2 have been received by the Transmission Provider.

If an Interconnection Request fails to meet the requirements set forth in Section 4.4.2, Transmission Provider shall notify the Interconnection Customer within five (5) Business Days of receipt of the initial Interconnection Request of the reasons for such failure and that the Interconnection Request does not constitute a valid request. The Interconnection Customer shall provide Transmission Provider the additional requested information needed to constitute a valid request within ten (10) Business Days after receipt of such notice. At any time, if Transmission Provider identifies issues with technical data provided by the Interconnection Customer, Interconnection Customer and Transmission Provider shall work expeditiously and in good faith to remedy any data issues. Failure by the Interconnection Customer to comply with this Section 4.4.5 shall be treated in accordance with Section 4.7.

Transmission Provider shall determine if the information contained in the Interconnection Request is adequately sufficient to start the Definitive System Impact Study by the close of the Customer Engagement Window.

4.4.6 Scoping Meeting for Serial Interconnection Study Process.

Within ten (10) Business Days after receipt of a valid Interconnection Request, Transmission Provider shall establish a date agreeable to Interconnection Customer for the Scoping

Meeting, and such date shall be no later than thirty (30) Calendar Days from receipt of the valid Interconnection Request, unless otherwise mutually agreed upon by the Parties.

The purpose of the Scoping Meeting shall be to discuss alternative interconnection options, to exchange information including any transmission data that would reasonably be expected to impact such interconnection options, to analyze such information and to determine the potential feasible Points of Interconnection. Transmission Provider and Interconnection Customer will bring to the meeting such technical data, including, but not limited to: (i) general facility loadings, (ii) general instability issues, (iii) general short circuit issues, (iv) general voltage issues, and (v) general reliability issues as may be reasonably required to accomplish the purpose of the meeting. Transmission Provider and Interconnection Customer will also bring to the meeting personnel and other resources as may be reasonably required to accomplish the purpose of the meeting in the time allocated for the meeting. On the basis of the meeting, Interconnection Customer shall designate its Point of Interconnection, pursuant to Section 4.4.1, and one or more available alternative Point(s) of Interconnection. The duration of the meeting shall be sufficient to accomplish its purpose.

4.4.7 Scoping Meeting for Definitive Interconnection Study Process.

Within ten (10) Business Days after the close of the DISIS Request Window described in Section 10.1, Transmission Provider shall host an open Scoping Meeting, for all Interconnection Requests received during that DISIS Request Window. If requested by the Interconnection Customer, Transmission Provider shall also hold individual customer specific Scoping Meetings, which must be requested no later than fifteen (15) Business Days after the close of the DISIS Request Window.

The purpose of the Scoping Meeting shall be to discuss alternative interconnection options, to exchange information, including any transmission data that would reasonably be expected to impact such interconnection options, to preliminarily analyze such information; and to determine the potential feasible Point(s) of Interconnection. Transmission Provider and Interconnection Customer will bring to the meeting such technical data, including, but not limited to: (i) general facility loadings, (ii) general instability issues, (iii) general short circuit issues, (iv) general voltage issues, and (v) general reliability issues as may be reasonably required to accomplish the purpose of the meeting. Transmission Provider and Interconnection Customer will also bring to the meeting personnel and other resources as may be reasonably required to accomplish the purpose of the meeting in the time allocated for the meeting. On the basis of the meeting, Interconnection Customer shall designate a single, definitive Point of Interconnection, pursuant to Section 4.4.2. The duration of the meeting shall be sufficient to accomplish its purpose.

At Interconnection Customer's option, the Transmission Provider and Interconnection Customer will identify alternative Point(s) of Interconnection and configurations at the Scoping Meeting to evaluate in the DISIS Cluster Study Process and attempt to eliminate alternatives in a reasonable fashion given resources and information available. Interconnection Customer shall select a single definitive Point of Interconnection to be studied no later than the execution of the DISIS Agreement and shall provide affirmation of Site Control to construct the entire Generating Facility and all required Interconnection Facilities to the designated Point of Interconnection or the deposit in lieu of Site Control prescribed in Section 4.4.2 (c.) no later than commencement of the Phase 1 study process described in Section 10.8.

4.5 OASIS Posting.

Transmission Provider will maintain on its OASIS a list of all Interconnection Requests. The list will identify, for each Interconnection Request: (i) the maximum summer and winter megawatt electrical output; (ii) the location by county and state; (iii) the station or transmission line or lines where the interconnection will be made; (iv) the projected In-Service Date; (v) the status of the Interconnection Request, including Queue Position and Cluster (if applicable); (vi) the type of Interconnection Service being requested; and (vii) the availability of any studies related to the Interconnection Request; (viii) the date of the Interconnection Request; (ix) the type of Generating Facility to be constructed (combined cycle, base load or combustion turbine and fuel type); and (x) for Interconnection Requests that have not resulted in a completed interconnection, an explanation as to why it was not completed. Except in the case of an Affiliate, the list will not disclose the identity of Interconnection Customer until Interconnection Customer executes an LGIA or requests that Transmission Provider file an unexecuted LGIA with FERC. Before holding a Scoping Meeting with its Affiliate, Transmission Provider shall post on OASIS an advance notice of its intent to do so. Transmission Provider shall post to its OASIS site any deviations from the study timelines set forth herein. Interconnection Study reports and Optional Interconnection Study reports shall be posted to Transmission Provider's OASIS site subsequent to the meeting between Interconnection Customer and Transmission Provider to discuss the applicable study results. Transmission Provider shall also post any known deviations in the Large Generating Facility's In-Service Date.

4.5.1 Requirement to Post Interconnection Study Metrics.

Transmission Provider will maintain on its OASIS or its website summary statistics related to processing Interconnection Studies pursuant to Interconnection Requests, updated quarterly. If Transmission Provider posts this information on its website, a link to the information must be provided on Transmission Provider's OASIS site. For each calendar quarter, Transmission Providers must calculate and post the information detailed in Sections 4.5.2 through 4.5.3.

4.5.2 Serial Interconnection Study Processing Metrics.

4.5.2.1 Feasibility Studies Processing Time.

(A) Number of Interconnection Requests that had Interconnection Feasibility Studies completed within Transmission Provider's Control Area during the reporting quarter;

(B) Number of Interconnection Requests that had Interconnection Feasibility Studies completed within Transmission Provider's Control Area during the reporting quarter that were completed more than 45 Calendar Days after receipt by Transmission Provider of the Interconnection Customer's executed Interconnection Feasibility Study Agreement;

(C) At the end of the reporting quarter, the number of active valid Interconnection Requests with ongoing incomplete Interconnection Feasibility Studies where such Interconnection Requests had executed Interconnection Feasibility Study Agreements received by Transmission Provider more than 45 Calendar Days before the reporting quarter end;

(D) Mean time (in Calendar Days), Interconnection Feasibility Studies completed within Transmission Provider's Control Area during the reporting quarter, from the date when Transmission Provider received the executed the Interconnection Feasibility Study

Agreement to the date when Transmission Provider provided the completed Interconnection Feasibility Study to the Interconnection Customer;

(E) Percentage of Interconnection Feasibility Studies exceeding 45 Calendar Days to complete this reporting quarter, calculated as the sum of 4.5.2.1(B) plus 4.5.2.1(C) divided by the sum of 4.5.2.1(A) plus 4.5.2.1(C)).

4.5.2.2 Serial Interconnection System Impact Studies Processing Time.

(A) Number of Interconnection Requests that had Serial Interconnection System Impact Studies completed within Transmission Provider's Control Area during the reporting quarter;

(B) Number of Interconnection Requests that had Serial Interconnection System Impact Studies completed within Transmission Provider's Control Area during the reporting quarter that were completed more than 90 Calendar Days after receipt by Transmission Provider of the Interconnection Customer's executed Interconnection System Impact Study Agreement;

(C) At the end of the reporting quarter, the number of active valid Interconnection Requests with ongoing incomplete System Impact Studies where such Interconnection Requests had executed Interconnection System Impact Study Agreements received by Transmission Provider more than 90 Calendar Days before the reporting quarter end;

(D) Mean time (in Calendar Days), Serial Interconnection System Impact Studies completed within Transmission Provider's Control Area during the reporting quarter, from the date when Transmission Provider received the executed Interconnection System Impact Study Agreement to the date when Transmission Provider provided the completed Interconnection System Impact Study to the Interconnection Customer;

(E) Percentage of Serial Interconnection System Impact Studies exceeding 90 Calendar Days to complete this reporting quarter, calculated as the sum of 4.5.2.2(B) plus 4.5.2.2(C) divided by the sum of 4.5.2.2(A) plus 4.5.2.2(C)).

4.5.3 Definitive Interconnection Study Processing Metrics.

4.5.3.1 Definitive Interconnection Study Phase 1 Processing Time.

(A) Number of Interconnection Requests that had DISIS Phase 1 Studies completed within Transmission Provider's Control Area during the reporting quarter;

(B) At the end of the reporting quarter, number of Interconnection Requests that had DISIS Phase 1 Studies completed within Transmission Provider's Control Area during the reporting quarter that were completed more than ninety (90) Calendar Days after Transmission Provider commenced the DISIS Phase 1 Study, the duration (in days) to complete the Phase 1 Study, and an explanation of why Transmission Provider's completion of the Phase 1 study exceeded the timeline set forth in Section 10.8(a.).

4.5.3.2 Definitive Interconnection Study Phase 2 Processing Time.

(A) Number of Interconnection Requests that had DISIS Phase 2 studies completed within Transmission Provider's Control Area during the reporting quarter;

(B) At the end of the reporting quarter, number of Definitive Interconnection Requests that had DISIS Phase 2 Studies completed within Transmission Provider's Control Area during

the reporting quarter that were completed more than one hundred fifty (150) Calendar Days after Transmission Provider commenced the DISIS Phase 2 Study, the duration (in days) to complete the Phase 2 Study, and an explanation of why Transmission Provider's completion of the Phase 2 study exceeded the timeline set forth in Section 10.8(c.).

4.5.3.3 Definitive Interconnection Study Phase 3 Processing Time.

(A) Number of Interconnection Requests that were required to undergo DISIS Phase 3 restudies and number of Phase 3 restudies completed within Transmission Provider's Control Area during the reporting quarter;

(B) At the end of the reporting quarter, number of Definitive Interconnection Requests that had DISIS Phase 3 restudies completed within Transmission Provider's Control Area during the reporting quarter that were completed more than one hundred fifty (150) Calendar Days after Transmission Provider commences the DISIS Phase 3 Restudy, the duration (in days) to complete the Phase 3 Restudy, and explanation of why Transmission Provider's completion of the Phase 3 Restudy exceeded the timeline set forth in Section 10.8(e.).

4.5.4 Interconnection Facilities Studies Processing Time.

(A) Number of Interconnection Requests that had Interconnection Facilities Studies that are completed within Transmission Provider's Control Area during the reporting quarter;

(B) Number of Interconnection Requests that had Interconnection Facilities Studies that are completed within Transmission Provider's Control Area during the reporting quarter that were completed (1) under the Serial Interconnection Study Process, more than (a) ninety (90) Calendar Days after receipt by Transmission Provider of the Interconnection Customer's executed Interconnection Facilities Study Agreement if Interconnection Customer requested a +/- 20% cost estimate in such study or (b) one hundred eighty (180) Calendar Days after receipt by Transmission Provider of the Interconnection Customer's executed Interconnection Facilities Study Agreement if Interconnection Customer requested a +/- 10% cost estimate in such study, or (2) under the Definitive Interconnection Study Process, more than one hundred fifty (150) Calendar Days after receipt by Transmission Provider of the Interconnection Customer's executed Interconnection Facilities Study Agreement;

(C) At the end of the reporting quarter, the number of active valid Interconnection Service requests with ongoing incomplete Interconnection Facilities Studies where such Interconnection Requests had executed Interconnection Facilities Studies Agreement received by Transmission Provider (1) under the Serial Interconnection Study Process, more than (a) ninety (90) Calendar Days after receipt by Transmission Provider of the Interconnection Customer's executed Interconnection Facilities Study Agreement if Interconnection Customer requested a +/- 20% cost estimate in such study or (b) one hundred eighty (180) Calendar Days before the reporting quarter end if Interconnection Customer requested a +/- 10% cost estimate in such study, or (2) under the Definitive Interconnection Study Process, more than one hundred fifty (150) Calendar Days after receipt by Transmission Provider of the Interconnection Customer's executed Interconnection Facilities Study Agreement;

(D) Mean time (in Calendar Days), for Interconnection Facilities Studies completed within Transmission Provider's Control Area during the reporting quarter, calculated from the date when Transmission Provider received the executed Interconnection Facilities Study

Agreement to the date when Transmission Provider provided the completed Interconnection Facilities Study to the Interconnection Customer;

(E) Percentage of delayed Interconnection Facilities Studies this reporting quarter, calculated as the sum of 4.5.4(B) plus 4.5.4(C) divided by the sum of 4.5.4(A) plus 4.5.4(C)).

4.5.5 Interconnection Service Requests Withdrawn From Interconnection Queue.
(A) Number of Interconnection Service requests withdrawn from Transmission Provider's interconnection queue during the reporting quarter;

(B) Number of Interconnection Service requests withdrawn from Transmission Provider's interconnection queue during the reporting quarter before completion of any interconnection studies or execution of any interconnection study agreements;

(C) Number of Interconnection Service requests withdrawn from Transmission Provider's interconnection queue during the reporting quarter before completion of an Interconnection System Impact Study or Definitive Interconnection System Impact Study Agreement, as applicable;

(D) Number of Interconnection Service requests withdrawn from Transmission Provider's interconnection queue during the reporting quarter before completion of an Interconnection Facility Study;

(E) Number of Interconnection Service requests withdrawn from Transmission Provider's interconnection queue after execution of a generator interconnection agreement or Interconnection Customer requests the filing of an unexecuted, new interconnection agreement;

(F) Mean time (in Calendar Days), for all withdrawn Interconnection Service requests, from the date when the request was determined to be valid to when Transmission Provider received the request to withdraw from the queue.

4.5.6 Requirement to Post Interconnection Study Metrics.
Transmission Provider is required to post on OASIS or its website the measures detailed from Section 4.5.2 (applicable to Transmission Providers administering Serial Interconnection Study Process only), 4.5.3 (applicable to Transmission Providers administering Definitive Interconnection Study Process only), 4.5.4, and 4.5.5 for each calendar quarter within 30 Calendar Days of the end of the calendar quarter. Transmission Provider will keep the quarterly measures posted on OASIS or its website for three calendar years with the first required report to be in the first quarter of 2020. If Transmission Provider retains this information on its website, a link to the information must be provided on Transmission Provider's OASIS site.

4.5.7 Reporting Requirement for Late Studies.
In the event that any of the values calculated in paragraphs 4.5.2.1(E), 4.5.2.2(E) or 4.5.4(E) exceeds 25 percent for two consecutive calendar quarters, Transmission Provider will have to comply with the measures below for the next four consecutive calendar quarters and must continue reporting this information until Transmission Provider reports four consecutive calendar quarters without the values calculated in 4.5.2.1(E), 4.5.2.2(E) or 4.5.4(E)) exceeding 25 percent for two consecutive calendar quarters:

(i) Transmission Provider must submit a report to the Commission describing the reason for each study or group of clustered studies pursuant to an Interconnection Request that exceeded its deadline (i.e., 45, 90, 150 or 180 Calendar Days) for completion (excluding any allowance for Reasonable Efforts). Transmission Provider must describe the reasons for each study delay and any steps taken to remedy these specific issues and, if applicable, prevent such delays in the future. The report must be filed at the Commission within 45 Calendar Days of the end of the calendar quarter.

(ii) Transmission Provider shall aggregate the total number of employee hours and third party consultant hours expended towards interconnection studies within its Control Area that quarter and post on OASIS or its website. If Transmission Provider posts this information on its website, a link to the information must be provided on Transmission Provider's OASIS site. This information is to be posted within 30 Calendar Days of the end of the calendar quarter.

4.6 Coordination with Affected Systems.

Transmission Provider will coordinate the conduct of any studies required to determine the impact of the Interconnection Request on Affected Systems with Affected System Operators and, if possible, include those results (if available) in its applicable Interconnection Study within the time frame specified in this LGIP. Transmission Provider will include such Affected System Operators in all meetings held with Interconnection Customer as required by this LGIP. Interconnection Customer will cooperate with Transmission Provider in all matters related to the conduct of studies and the determination of modifications to Affected Systems. A Transmission Provider which may be an Affected System shall cooperate with Transmission Provider with whom interconnection has been requested in all matters related to the conduct of studies and the determination of modifications to Affected Systems. It is the responsibility of the Affected System Operator to provide the requirements or potential impediments to providing the requested interconnection service, including a preliminary indication of the cost and length of time that would be necessary to (i) complete any interconnection studies and (ii) construct any necessary Interconnection Facilities and Network Upgrades needed to reliably interconnect at the requested service level.

4.7 Withdrawal.

Interconnection Customer may withdraw its Interconnection Request at any time by written notice of such withdrawal to Transmission Provider. In addition, if Interconnection Customer fails to adhere to all requirements of this LGIP, except as provided in Section 16.6 (Disputes), Transmission Provider shall deem the Interconnection Request to be withdrawn and shall provide written notice to Interconnection Customer of the deemed withdrawal and an explanation of the reasons for such deemed withdrawal. Upon receipt of such written notice, Interconnection Customer shall have fifteen (15) Business Days in which to either respond with information or actions that cures the deficiency or to notify Transmission Provider of its intent to pursue Dispute Resolution.

Withdrawal shall result in the loss of Interconnection Customer's Queue Position. If an Interconnection Customer disputes the withdrawal and loss of its Queue Position, then during Dispute Resolution, Interconnection Customer's Interconnection Request is eliminated from the Queue until such time that the outcome of Dispute Resolution would restore its Queue Position. An Interconnection Customer that withdraws or is deemed to have withdrawn its

Interconnection Request shall pay to Transmission Provider all costs that Transmission Provider prudently incurs with respect to that Interconnection Request prior to Transmission Provider's receipt of notice described above. Interconnection Customer must pay all monies due to Transmission Provider before it is allowed to obtain any Interconnection Study data or results.

Transmission Provider shall (i) update the OASIS Queue Position posting and (i) refund to Interconnection Customer any of the refundable portion of Interconnection Customer's study deposit or study payments that exceeds the share of the costs that Transmission Provider has incurred, including interest calculated in accordance with Section 35.19a(a)(2) of FERC's regulations. In the event of such withdrawal, Transmission Provider, subject to the confidentiality provisions of Section 16.1, shall provide, at Interconnection Customer's request, all information that Transmission Provider developed for any completed study conducted up to the date of withdrawal of the Interconnection Request.

4.7.1 Definitive Interconnection Study Process – Withdrawal Penalty.

Where a Transmission Provider is administering a Definitive Interconnection Study Process and an Interconnection Customer notifies the Transmission Provider of its intended Interconnection Request withdrawal or it is deemed withdrawn, as provided for in Section 4.7, the Transmission Provider shall: (i) update the OASIS Queue Position posting; (ii) impose the Withdrawal Penalty described in this Section and calculated under the methodology in Section 4.7.1.1, (iii), refund any security after settling the final invoice as described in Section 10.11.6, (iv) refund to Interconnection Customer any of the refundable portion of Interconnection Customer's study deposit or study payments that exceeds the share of the costs that Transmission Provider has incurred, including interest calculated in accordance with Section 35.19a(a)(2) of FERC's regulations. In the event of such withdrawal, Transmission Provider, subject to the confidentiality provisions of Section 16.1, shall provide, at Interconnection Customer's request, all information that Transmission Provider developed for any completed study conducted up to the date of withdrawal of the Interconnection Request.

An Interconnection Customer shall be subject to a Withdrawal Penalty if it withdraws its Interconnection Request from the Queue or the Generating Facility does not otherwise reach Commercial Operation unless the Transmission Provider determines consistent with Good Utility Practice that (1) the withdrawal does not negatively affect the timing or cost of equal or lower queued projects; (2) the cost responsibility identified for that Interconnection Customer in the current study report associated with new Network Upgrades to the Transmission Provider’s System increased by more than twenty-five percent (25%) compared to the costs identified in the previous report; or (3) if the customer withdraws after the Interconnection Facilities Study report is published and before providing M5, and the cost responsibility for that Interconnection Customer identified in the Interconnection Facilities Study report increases by more than one hundred percent (100%) compared to the Phase 2 report.

4.7.1.1 Calculation of the Withdrawal Penalty.

If the Interconnection Customer provided a demonstration(s) of readiness at Readiness Milestones 1-4, as described in Sections 10.11.1, 10.11.2, 10.11.3, and 10.11.4, that Interconnection Customer’s Withdrawal Penalty shall be equal to the higher of the study deposit or one (1) times its actual allocated cost of the Definitive Interconnection Study Process.

If the Interconnection Customer did not provide a demonstration(s) of readiness at Readiness Milestones 1-4, as described in Sections 10.11.1, 10.11.2, 10.11.3, and 10.11.4, that Interconnection Customer's Withdrawal Penalty shall be dependent on the Interconnection Customer's progression through the Section 10 Definitive Interconnection System Impact Study and the Section 11 Interconnection Facilities Study and shall be calculated as follows:

1. If the Interconnection Customer withdraws in DISIS Phase 1 (after M1, but before M2), the Withdrawal Penalty shall be the higher of the study deposit or two (2) times its actual allocated cost of the Definitive Interconnection Study Process. This amount shall be capped at one (1) million dollars.

2. If the Interconnection Customer withdraws in DISIS Phase 2 (after M2, but before M3), the Withdrawal Penalty shall be the higher of the study deposit or three (3) times its actual allocated cost of the Definitive Interconnection Study Process. This amount shall be capped at one and one half (1.5) million dollars.

3. If the Interconnection Customer withdraws after DISIS Phase 2 concludes but before the Interconnection Facilities Study commences (after M3, but before M4), the Withdrawal Penalty shall be the higher of the study deposit or five (5) times the Interconnection Customer's actual allocated cost of the Definitive Interconnection Study Process. This amount shall be capped at two (2) million dollars.

4. If the Interconnection Customer withdraws in the Interconnection Facilities Study (after M4, but before M5), the Withdrawal Penalty shall be the higher of the study deposit or seven (7) times the Interconnection Customer's actual allocated cost of the Definitive Interconnection Study Process. This amount shall be capped at two and a half (2.5) million dollars.

If the Interconnection Customer provided a deposit in lieu of Site Control for Phase 1 and withdraws before entering Phase 2, the Withdrawal Penalty is increased by an amount equal to $20,000 plus $500/MW, which is in addition to the amounts described above.

The Withdrawal Penalty for any Interconnection Customer that has executed an LGIA is the higher of the study deposit or nine (9) times its actual allocated cost of the Definitive Interconnection Study Process.

4.7.1.2 Distribution of the Withdrawal Penalty.

Any Withdrawal Penalty revenues shall be used to fund generation interconnection studies. Withdrawal Penalty revenues shall first be applied, in the form of a bill credit, to not-yet-invoiced study costs for other Interconnection Customers in the same cluster, and to the extent that such studies are fully credited, shall be applied to study costs of future clusters in Queue order. ;Withdrawn Interconnection Customers shall not receive a bill credit associated with Withdrawal Penalties. Distribution of Withdrawal Penalty revenues to a specific study shall not exceed the total actual study costs. Allocation of Withdrawal Penalty revenues within a cluster to a specific customer shall be comparable to the allocation of study costs described in Section 10.3. Specifically, the Withdrawal Penalty revenue distribution to each customer in a specific cluster, shall be (1) ten percent (10%) on a per capita basis based on number of Interconnection Requests in the applicable Cluster; and (2) ninety percent (90%) to Interconnection Customers on a pro-rata basis based on requested megawatts included in

the applicable Cluster. Distribution of Withdrawal Penalty revenue associated with Readiness Milestone 5 shall not be distributed to the remaining customers in that cluster until all customers in that cluster have reached Commercial Operation and thereafter shall be distributed as described above. Transmission Provider shall not change the distribution of Withdrawal Penalty revenue without authorization by the Commission. Transmission Provider shall post the Withdrawal Penalty balance on its OASIS site.

4.8 Identification of Contingent Facilities.

4.8.1 Method for Identifying Contingent Facilities.

The following steps are to be taken by Transmission Provider to identify and list the Contingent Facilities, if any, upon which the Interconnection Customer's costs, timing, and study findings are dependent. Such list is to be provided to Interconnection Customer at the conclusion of either the Serial Interconnection System Impact Study performed pursuant to the requirements of Section 9 or the Definitive Interconnection System Impact Study performed pursuant to the requirements of Section 10 of this LGIP.

Step 1: In preparation for performing an Interconnection Customer's System Impact Study, Transmission Provider will employ the following three methods to identify potential contingent facilities:

(a) reviewing any applicable Interconnection Study associated with generating facilities that have a higher queued interconnection request and determining whether any of those request(s) have unbuilt Interconnection Facilities and/or Network Upgrades that may be necessary to accommodate the Interconnection Customer's requested interconnection,

(b) reviewing its 10-year transmission expansion plan and identifying any planned upgrades to its System which may be necessary to accommodate the Interconnection Customer's requested interconnection, and

(c) coordinating with applicable Affected Systems to obtain from such Affected Systems any completed and available Affected System studies to determine what Contingent Facilities have been identified in such studies based on the Affected Systems' respective criteria.

Step 2: Using the methods identified in Step 1, Transmission Provider will make a list of potential contingent facilities that consist of

(a) any unbuilt Interconnection Facilities and/or Network Upgrades associated with higher queued interconnection requests that are identified as potentially necessary to accommodate the Interconnection Customer's requested interconnection,

(b) any of Transmission Provider's planned upgrades to its system that are identified as potentially necessary to accommodate the Interconnection Customer's requested interconnection, and

(c) any Contingent Facilities that have been identified in Affected System studies as potentially necessary to accommodate Interconnection Customer's requested interconnection.

Step 3: The Transmission Provider will, using the list of potential contingent facilities identified in Steps 2(a) and 2(b), conduct a flow impact analysis on such facilities based on the performance requirements set forth in NERC Reliability Standard TPL-001-4, Table 1 (Transmission System Planning Performance Requirements) or any successor applicable version of such Reliability Standard; provided, however, that the flow impact analysis is not necessary if the related modification or upgrade is the facility the generator is connecting to (effectively 100% flow impact).

Step 4: The criteria that shall apply to the flow impact analysis performed in Step 3 are as follows:

a. the MW size of the Interconnection Request (the distribution factor) and
b. the applicable MVA rating of the existing facility that is mitigated by the potential contingent facility

The thresholds that shall apply to the flow impact analysis performed in Step 3 are as follows:

a. 3% of the MW size of the Interconnection Request (the distribution factor) and
b. 1% of the applicable MVA rating of the existing facility that is mitigated by the potential contingent facility

If Transmission Provider's resulting analysis in accordance with Step 3 and applying the thresholds in this Step 4 demonstrates that the MW impact on the potential contingent facility is either (a) at least 3% of the MW size of the Interconnection Request (the distribution factor) or (b) at least 1% of the applicable MVA rating of the existing facility that is mitigated by the potential contingent facility then Transmission Provider shall deem such potential contingent facilities as Contingent Facilities.

Step 5: In the System Impact Study report, Transmission Provider will list the identified Contingent Facilities and explain why each listed Contingent Facility was identified as such by identifying (a) which threshold in Step 4 was exceeded and (b) the amount by which such threshold was exceeded, which will inform Interconnection Customer of its potential risk exposure should any such Contingent Facility be delayed or not built.

4.8.2 Estimates Available for Contingent Facilities.

Upon request of Interconnection Customer, Transmission Provider shall provide the estimated costs of Interconnection Facilities and/or Network Upgrades and estimated in-service completion times of each Contingent Facility identified in either the Serial Interconnection System Impact Study performed pursuant to Section 9 or the Definitive Interconnection System Impact Study pursuant to Section 10 of this LGIP, if, and to the extent, Transmission Provider determines that such information is readily available and not commercially sensitive.

4.8.3 Inclusion of Contingent Facilities in LGIA.

Any Contingent Facilities identified for Interconnection Customer at the conclusion of either the Serial Interconnection System Impact Study performed pursuant to Section 9 or the Definitive Interconnection System Impact Study pursuant to Section 10 of this LGIP, will subsequently be included in such Interconnection Customer's Large Generator Interconnection Agreement, to the extent they are still applicable.

Section 5. Queue Position and Queue Processing.

5.1 Serial Interconnection Study Process Queue Position.

Where the Transmission Provider is administering a Serial Interconnection Study Process, Transmission Provider shall assign a Queue Position based upon the date and time of receipt of the valid Interconnection Request; provided that, if the sole reason an Interconnection Request is not valid is the lack of required information on the application form, and Interconnection Customer provides such information in accordance with Section 4.4.4, then Transmission Provider shall assign Interconnection Customer a Queue Position based on the date the application form was originally filed. Moving a Point of Interconnection shall result in a lowering of Queue Position if it is deemed a Material Modification under Section 5.4.

The Queue Position of each Interconnection Request will be used to determine the order of performing the Interconnection Studies and determination of cost responsibility for the facilities necessary to accommodate the Interconnection Request. A higher queued Interconnection Request is one that has been placed "earlier" in the queue in relation to another Interconnection Request that is lower queued.

5.1.1 Serial Interconnection Study Process – Clustering.

At Transmission Provider's option, Interconnection Requests may be studied serially or in clusters for the purpose of the Serial Interconnection System Impact Study.

Clustering shall be implemented on the basis of Queue Position. If Transmission Provider administering the Serial Interconnection Study Process elects to study Interconnection Requests using Clustering, all Interconnection Requests received within a period not to exceed one hundred and eighty (180) Calendar Days, hereinafter referred to as the "Queue Cluster Window" shall be studied together without regard to the nature of the underlying Interconnection Service, whether Energy Resource Interconnection Service or Network Resource Interconnection Service. The deadline for completing all Serial Interconnection System Impact Studies for which a Serial Interconnection System Impact Study Agreement has been executed during a Queue Cluster Window shall be in accordance with Section 9.4, for all Interconnection Requests assigned to the same Queue Cluster Window. Transmission Provider may study an Interconnection Request separately to the extent warranted by Good Utility Practice based upon the electrical remoteness of the proposed Large Generating Facility.

Clustering Serial Interconnection System Impact Studies shall be conducted in such a manner to ensure the efficient implementation of the applicable regional transmission expansion plan in light of the Transmission System's capabilities at the time of each study.

The Queue Cluster Window shall have a fixed time interval based on fixed annual opening and closing dates. Any changes to the established Queue Cluster Window interval and opening or closing dates shall be announced with a posting on Transmission Provider's OASIS beginning at least one hundred and eighty (180) Calendar Days in advance of the change and continuing thereafter through the end date of the first Queue Cluster Window that is to be modified.

5.2 Definitive Interconnection Study Process Queue Position.

Where the Transmission Provider is administering a Definitive Interconnection Study Process, the Transmission Provider shall assign a Queue Position to each Interconnection Request as follows: the Queue Position within the Queue shall be assigned based upon the date and time of receipt of all items required pursuant to the provisions of Section 4.4 during the annual DISIS Request Window described in Section 10.1. There is no queue for Informational Interconnection Studies.

A higher Queue Position assigned to an Interconnection Request is one that has been placed "earlier" in the Queue in relation to another Interconnection Request that is assigned a lower Queue Position. All requests studied in a single Cluster shall be considered equally queued but Clusters initiated earlier in time shall be considered to have a higher Queue Position than clusters initiated later. The Queue Position of an Interconnection Request shall have no bearing on the allocation of the cost of the shared Network Upgrades and Transmission Provider's Interconnection Facilities identified in the applicable Cluster study (such costs will be allocated among Interconnection Requests in accordance with Section 10.4). Moving a Point of Interconnection shall result in the withdrawal of the Interconnection Request and loss of the corresponding Queue Position if it is deemed a Material Modification under Section 5.4.

5.3 Transferability of Queue Position.

An Interconnection Customer may transfer its Queue Position to another entity only if such entity acquires the specific Generating Facility identified in the Interconnection Request and the Point of Interconnection does not change.

5.4 Modifications.

Interconnection Customer shall submit to Transmission Provider, in writing, modifications to any information provided in the Interconnection Request. Interconnection Customer shall retain its Queue Position if the modifications are in accordance with Sections 5.4.1, 5.4.2, 5.4.3, or 5.4.5, or are determined not to be Material Modifications pursuant to Section 5.4.3.

Notwithstanding the above, during the course of the Interconnection Studies, either Interconnection Customer or Transmission Provider may identify changes to the planned interconnection that may improve the costs and benefits (including reliability) of the interconnection, and the ability of the proposed change to accommodate the Interconnection Request. Subject to the forgoing sentence, and provided, however, they do not result in a Material Modification, to the extent the identified changes are acceptable to Transmission Provider, Interconnection Customer and potentially impacted Interconnection Customers in the same Cluster, such acceptance not to be unreasonably withheld, Transmission Provider shall modify the Point of Interconnection and/or configuration in accordance with such changes and proceed with any re-studies necessary to do so in accordance with Section 9.6, Section 10.8(e.), and Section 10.10 as applicable and Interconnection Customer shall retain its Queue Position.

5.4.1 Material Modifications Prior to System Impact Study Agreement Execution.

Prior to (a) the return of the executed Serial Interconnection System Impact Study Agreement to Transmission Provider or (b) no later than forty (40) Calendar Days after the close of the DISIS Request Window and prior to the return of the executed Definitive Interconnection System Impact Study Agreement to Transmission Provider, modifications permitted under this Section shall include specifically: (a) a decrease of up to 60 percent of

electrical output (MW) of the proposed project; through either (1) a decrease in plant size of (2) a decrease in Interconnection Service level (consistent with the processes described in Section 4.1) accomplished by applying Transmission Provider-approved injection-limiting equipment; (b) modifying the technical parameters associated with the Large Generating Facility technology or the Large Generating Facility step-up transformer impedance characteristics; and (c) modifying the interconnection configuration. For plant increases, the incremental increase in plant output will go to the end of the queue for the purposes of cost allocation and study analysis.

5.4.2 Material Modifications Prior to Facilities Study Agreement Execution.
Prior to the return of the executed Serial Interconnection Facilities Study Agreement or Definitive Interconnection Facilities Study Agreement (as the case may be) to the Transmission Provider, the modifications permitted under this Section shall include specifically: (a) additional 15 percent decrease of electrical output of the proposed project through either (1) a decrease in plant size (MW) or (2) a decrease in Interconnection Service level (consistent with the process described in Section 4.1) accomplished by applying Transmission Provider-approved injection-limiting equipment;, and (b) Large Generating Facility technical parameters associated with modifications to Large Generating Facility technology and transformer impedances; provided, however, any incremental re-study costs or shifts in Network Upgrade costs associated with those modifications that would increase costs assigned to other Interconnection Customers within the same Cluster shall not be allocated pursuant to Sections 10.3 and 10.4 of this LGIP, and, instead, are the responsibility of and shall be fully assigned to the requesting Interconnection Customer; and (c) a Permissible Technological Advancement for the Large Generating Facility after the submission of the Interconnection Request. Section 5.4.5 specifies a separate technological change procedure including the requisite information and process that will be followed to assess whether the Interconnection Customer's proposed technological advancement is a Material Modification. Section 1 contains a definition of Permissible Technological Advancement.

5.4.3 Modification Inquiry Process.
Prior to making any modification other than those specifically permitted by Sections 5.4.1, 5.4.2, 5.4.3, and 5.4.5, Interconnection Customer may first request that Transmission Provider evaluate whether such modification is a Material Modification. In response to Interconnection Customer's request, Transmission Provider shall evaluate the proposed modifications prior to making them and inform Interconnection Customer in writing of whether the modifications would constitute a Material Modification. Any change to the Point of Interconnection, except those deemed acceptable under Sections 5.4.1, 5.4.2, 9.2, 10.7 or so allowed elsewhere, shall constitute a Material Modification. Interconnection Customer may then withdraw the proposed modification or proceed with a new Interconnection Request for such modification.

5.4.4 Receipt of Request for Modification. Upon receipt of Interconnection Customer's request for modification permitted under this Section 5.4, Transmission Provider shall commence and perform any necessary additional studies as soon as practicable, but in no event shall Transmission Provider commence such studies later than thirty (30) Calendar Days after receiving notice of Interconnection Customer's request.

5.4.5 Commercial Operation Date. Extensions of less than three (3) cumulative years in the Commercial Operation Date of the Large Generating Facility to which the Interconnection

Request relates are not material and should be handled through construction sequencing. The initial requested Commercial Operation Date used for this calculation is determined from the date proposed in the initial Interconnection Request (Revised LGIP Appendix 3). Such cumulative extensions are inclusive of extensions requested after execution by Interconnection Customer of the LGIA.

5.4.6 Technological Change Procedure.

The technological change procedure included in this Section 5.4.6 will be followed to assess whether Interconnection Customer's proposed modification is a Material Modification.

5.4.6.1 Technological Change Request.

If an Interconnection Customer seeks to incorporate a technological advancement into its existing Interconnection Request, it must submit a Technological Change Request ("TCR") as described below to the Transmission Provider in writing any time prior to the return of the signed Interconnection Facilities Study Agreement.

The Interconnection Customer's TCR shall include a description of the proposed change, a $10,000 study deposit, and the following information: (1) updated technical data called for in Attachment A of Appendix 1; (2) type and specifications of equipment being replaced; (3) updated modeling information; (4) make and model of new equipment; (5) dynamic, steady-state and performance characteristics of the new equipment; (6) efficiencies, impedances, and ratings of the equipment; and (7) technical analysis demonstrating that the technological change would (i) result in electrical performance that is equal to or better than the electrical performance expected prior to the technological change, and (ii) not cause any reliability concerns (i.e., would not materially impact the Transmission System with regard to short circuit capability limits, steady-state thermal and voltage limits, or dynamic system stability and response). The Interconnection Customer's analysis should contain engineering evidence and reasoning that clearly demonstrates that the proposed change aligns with the definition of a Permissible Technological Advancement.

Upon receipt by the Transmission Provider of a completed TCR from the Interconnection Customer, the Transmission Provider will evaluate the TCR to determine whether the TCR is a Permissible Technological Advancement or if it necessitates the performance of additional analyses and/or studies. If the TCR is determined to have no adverse effect on electrical parameters or performance, then the TCR will not be considered a Material Modification, but rather will be deemed a Permissible Technological Advancement.

If the Transmission Provider determines that additional analyses and/or studies are required, Transmission Provider's studies may include steady-state, reactive power, short circuit, stability analysis and any other appropriate studies that the Transmission Provider deems necessary based on the Transmission Provider's engineering judgement.

These additional studies and/or analyses will determine whether the technological advancement results in electrical performance that is equal to or better than the electrical performance expected prior to the TCR and be deemed a Permissible Technological Advancement, or if the technological advancement is deemed a

Material Modification. Transmission Provider shall complete the evaluation as soon as practical but no later than thirty (30) Calendar Days after the receipt of the completed TCR.

Transmission Provider will produce a report that will state if the technological change is permissible. If the proposed technology fails to meet the definition of a Permissible Technological Advancement, then the TCR is deemed to be a Material Modification. In such cases, the study report shall provide an explanation regarding why the technological change is a Material Modification. The Interconnection Customer can choose to abandon the request and retain its queue position or choose to proceed with the request and reenter the queue with a new queue position.

If the study determines that the proposed technology meets the definition of a Permissible Technological Advancement, the modification is approved and will be incorporated into the Interconnection Request. Study reports may be updated if appropriate. Once the Permissible Technological Advancement is approved and incorporated into the Interconnection Request, a new TCR would be required for the Interconnection Customer to revert back to the original equipment or to make additional modifications to equipment.

Transmission Provider shall either refund any overage or charge for any shortage for costs of the study that exceed the deposit amount. The studies associated with the TCR shall be billed separately from other Interconnection Studies.

Section 6. Procedures for Interconnection Requests Submitted Prior to Effective Date of Standard Large Generator Interconnection Procedures.

6.1 Queue Position for Pending Requests.

6.1.1 Any Interconnection Customer assigned a Queue Position prior to the effective date of this LGIP shall retain that Queue Position.

6.1.1.1 If an Interconnection Study Agreement has not been executed as of the effective date of this LGIP, then such Interconnection Study, and any subsequent Interconnection Studies, shall be processed in accordance with this LGIP.

6.1.1.2 If an Interconnection Study Agreement has been executed prior to the effective date of this LGIP, such Interconnection Study shall be completed in accordance with the terms of such agreement, except where Transmission Provider initiates a transition to a Definitive Interconnection Study Process as prescribed in Section 7.

6.1.1.3 If an LGIA has been submitted to FERC for approval before the effective date of the LGIP, then the LGIA would be grandfathered.

6.2 New Transmission Provider.

If Transmission Provider transfers control of its Transmission System to a successor Transmission Provider during the period when an Interconnection Request is pending, the original Transmission Provider shall transfer to the successor Transmission Provider any

amount of the deposit or payment with interest thereon that exceeds the cost that it incurred to evaluate the request for interconnection. Any difference between such net amount and the deposit or payment required by this LGIP shall be paid by or refunded to the Interconnection Customer, as appropriate. The original Transmission Provider shall coordinate with the successor Transmission Provider to complete any Interconnection Study, as appropriate, that the original Transmission Provider has begun but has not completed. If Transmission Provider has tendered a draft LGIA to Interconnection Customer but Interconnection Customer has not either executed the LGIA or requested the filing of an unexecuted LGIA with FERC, unless otherwise provided, Interconnection Customer must complete negotiations with the successor Transmission Provider.

Section 7. Transition Procedures for Definitive Interconnection Study Process.

Where the Transmission Provider publicizes its intent to transition to the Definitive Interconnection Study Process prescribed in Section 10 by posting notice to the OASIS website (the date of posting to be known as the "Cluster Study transition notice date"), such notice not to be published until after approval of the revised LGIP by FERC, an Interconnection Customer that has received a Queue Number but has not executed an Interconnection Agreement with the Transmission Provider prior to the Cluster Study transition notice date may elect to be studied under the Transition Procedures set forth in this section by executing a transitional study agreement (as applicable under Section 7.2) and meeting the requirements to enter the Transition Procedures study process. An Interconnection Customer electing to complete the study process under this section must notify the Transmission Provider and meet all Transitional readiness milestone requirements within sixty (60) Calendar Days of the delivery of notice of the Transmission Provider's transition to the Definitive Interconnection Study Process, such notice to be provided by the Transmission Provider in writing. If an Interconnection Customer elects to continue with a Transitional Serial Interconnection Facilities Study or a Transitional Cluster Study as described below, Transmission Provider shall retain the current study deposits, and Interconnection Customer shall be responsible for the entire cost of all studies pursuant to Sections 7.1, Section 7.2, and Section 11. An Interconnection Customer that does not meet the Transition Procedure requirements shall be deemed withdrawn pursuant to the Transition Procedures set forth in this section and then may submit a new Interconnection Request to be studied under the Definitive Interconnection Study Process.

7.1 Transitional Serial Process.

An Interconnection Customer that has a) a final System Impact Study Report that identifies the Interconnection Facilities and any Network Upgrades required to feasibly interconnect the proposed Generating Facility, and b) an Interconnection Facilities Study Agreement executed by the Interconnection Customer prior to the Cluster Study transition notice date, may opt to continue with the serial Facilities Study process if the Interconnection Customer provides notice in writing to the Transmission Provider and meets each of the following requirements that demonstrate readiness within the timeframe prescribed in Section 7.

a) Execute a Transitional Serial Interconnection Facilities Study Agreement, as provided in Appendix 8-1;

b) Provide security equal to one hundred percent (100%) of the costs identified for Transmission Provider's Interconnection Facilities and Network Upgrades in the System Impact Study Report. The security shall be in the form of (a) cash; (b) an irrevocable letter of credit in a form reasonably acceptable to Transmission Provider; or (c) for

amounts exceeding the potential Withdrawal Penalty to be assigned under this Section, other forms of security provided for in Section 11.5 of the LGIA (such as a surety bond) in a form reasonably acceptable to Transmission Provider. If the Interconnection Customer withdraws prior to executing an LGIA, the Transmission Provider shall be entitled to use the security as payment for (a) the final invoice for study costs and (b) the Withdrawal Penalty, after which any remaining amount of security shall be returned to Interconnection Customer. If the Interconnection Customer does not withdraw and executes an LGIA, the amount of security shall be increased or decreased as needed in order to reflect the cost estimate for Transmission Provider's Interconnection Facilities and Network Upgrades set forth in Appendix B to the LGIA. Once the LGIA is fully executed, the terms of the LGIA shall govern such security.

c) Demonstrate exclusive Site Control for the entire Generating Facility and any Interconnection Customer's Interconnection Facilities.

d) Interconnection Customer shall provide one of the following:

i. A contract, binding upon the parties to the contract, for sale of the Generating Facility's energy, or the entire constructed Generating Facility, where the term of sale is not less than five (5) years, or

ii. Reasonable evidence that the Generating Facility is included in a Resource Planning Entity's Resource Plan or has received a contract award in a Resource Solicitation Process, or

iii. An executed Provisional Large Generator Interconnection Agreement filed with FERC. Such an agreement shall not be suspended and shall include a commitment to construct the Generating Facility.

The Transmission Provider shall complete the Transitional Serial Facilities Study pursuant to Section 11 except that the Readiness Milestone 4 requirement Section 11.2 shall not apply.

All LGIA negotiations shall be completed and the LGIA executed (or filed unexecuted) within sixty (60) Calendar Days of the publication of the final Interconnection Facilities Study Report or the Interconnection Request shall be deemed withdrawn pursuant to Section 4.7 unless extended by mutual agreement of Transmission Provider and Interconnection Customer. A change in the Commercial Operation Date shall not delay the construction of facilities if such delay negatively affects lower or equal queued projects.

If the Interconnection Customer elects to proceed under this Transitional Serial Process and subsequently withdraws its Interconnection Request or the Generating Facility otherwise does not reach Commercial Operation, a Withdrawal Penalty equal to nine (9) times the Interconnection Request's total study cost is imposed and the collected amount shall be distributed to fund future Cluster Study costs pursuant to Section 4.7.1.2, unless the Transmission Provider determines consistent with Good Utility Practice that a Withdrawal Penalty should not be assigned pursuant to Section 4.7.1.

7.2 Transitional Cluster Process.

7.2.1 Transitional Cluster Eligibility Requirements.

An Interconnection Customer with an assigned Queue Position prior to the Cluster Study transition notice date, may opt to enter the transitional cluster study ("Transitional Cluster Study") if the Interconnection Customer meets the requirements detailed below pursuant to the process established in Section 7. All Interconnection Customers who enter the Transitional Cluster Study shall be considered to have an equal Queue Position, and identified Network Upgrade costs shall be allocated according to Section 10.4 of this LGIP. The Transitional Cluster Study costs shall be allocated according to the method described in Section 10.3.

A Transitional Cluster Study general informational meeting open to all eligible Interconnection Customers shall be held within thirty (30) Calendar Days of the Cluster Study transition notice date. To join the Transitional Cluster Study, the Interconnection Customer must meet all of the following requirements within the timeframe prescribed in Section 7:

a) Execute a Transitional Cluster Study Agreement, as provided in Appendix 8-2;

b) Request either Energy Resource Interconnection Service or Network Resource Interconnection Service; provided, however, any Interconnection Customer requesting Network Resource Interconnection Service may also request that it be concurrently studied for Energy Resource Interconnection Service prior to Section 7.2.4 Transitional Cluster Facilities Study but must designate either ERIS or NRIS no later than five business days after the Transitional Cluster Phase 2 Report is issued;

c) Make a supplemental Interconnection Request study deposit in cash, if necessary, to increase the Interconnection Customer's total study deposit to equal the amount required under Section 4.1.2 of the LGIP;

d) Demonstrate that Interconnection Customer has exclusive Site Control for the entire Generating Facility and all required Interconnection Facilities to the Point of Interconnection to the Transmission Provider's System. Interconnection Customer may provide a cash deposit equal to $20,000 plus $500/MW in lieu of Site Control to enter Transitional Cluster Study Phase 1. A deposit in lieu of Site Control is not accepted for later Phases of the Transitional Cluster Study Process; and

e) Interconnection Customer shall provide one of the following:

    i. Executed term sheet (or comparable evidence) related to a contract, binding upon the parties to the contract, for sale of the Generating Facility's energy, or the entire constructed Generating Facility, where the term of sale is not less than five (5) years, or

    ii. Reasonable evidence that the Generating Facility is included in an Resource Planning Entity's Resource Plan or Resource Solicitation Process, or

    iii. An executed Provisional Large Generator Interconnection Agreement filed with FERC that is not in suspension with 1) a commitment to construct the facility, 2)

a Commercial Operation Date no later than 2024 and 3) a security deposit in addition to amount required under Section 4.1.2 where the total security deposit represents a reasonable estimation of the potential costs that could be ultimately allocated to the project in the Transitional Cluster Study, or

iv. Security equal to three million dollars ($3,000,000). The security shall be in the form of (a) cash; or (b) an irrevocable letter of credit in a form reasonably acceptable to Transmission Provider. If the Interconnection Customer withdraws prior to executing an LGIA, the Transmission Provider shall be entitled to use the security as payment for (a) the final invoice for study costs and (b) the Withdrawal Penalty, after which any remaining amount of security shall be returned to Interconnection Customer. If the Interconnection Customer does not withdraw and executes an LGIA, the amount of security shall be increased or decreased as needed in order to reflect the cost estimate for Transmission Provider's Interconnection Facilities and Network Upgrades set forth in Appendix B to the LGIA. Once the LGIA is fully executed, the terms of the LGIA shall govern such security.

7.2.2 Transitional Cluster Expedited Customer Engagement Process and Phase 1.
If one or more valid requests are received into the Transitional Cluster Study, the Transmission Provider shall undertake an expedited thirty (30) Calendar Day customer engagement process as provided for in Section 10.1 and shall then initiate a Phase 1 study under the procedures prescribed in Section 10.8 ("Transitional Cluster Study Phase 1") to evaluate the impact of the proposed interconnection(s) within the Transitional Cluster Study on the reliability of the Transition Provider's System. The Transmission Provider shall use Reasonable Efforts to complete the Transitional Cluster Study Phase 1 consisting of a power flow and voltage analysis within ninety (90) Calendar Days. The Transitional Cluster Study Phase 1 Report shall identify the Interconnection Facilities and Network Upgrades that are expected to be required as a result of the Interconnection Request(s) and provide a non-binding good-faith indicative estimate of cost responsibility and a non-binding good-faith estimated time to construct. The Transmission Provider will host a meeting to discuss the results of Transitional Cluster Study Phase 1 within ten (10) Calendar Days of issuing the Transitional Cluster Study Phase 1 Report.

An Interconnection Customer that withdraws the Interconnection Request from the Transitional Cluster during the Phase 1 study or within thirty (30) Calendar Days of the Transmission Provider's publication of the Transitional Cluster Study Phase 1 Report shall be assigned its allocated Phase 1 Study Costs calculated pursuant to Section 10.3 and shall not be allocated a Withdrawal Penalty. At any time after Phase 2 commences, the Interconnection Customer shall be subject to the Withdrawal Penalty identified in Section 7.2.6 and the collected amount shall be distributed to fund Transitional Cluster Study or future Cluster Study costs pursuant to Section 4.7.1.2, unless the Transmission Provider determines consistent with Good Utility Practice that a Withdrawal Penalty should not be assigned pursuant to Section 4.7.1. If the Interconnection Customer withdraws its Interconnection Request or the Generating Facility otherwise does not reach Commercial Operation, the deposit(s) required by Section 7.2.3 are fully refundable once the final invoice for study costs and Withdrawal Penalty is settled.

7.2.3 Transitional Cluster Study Phase 2.

Within thirty (30) Calendar Days of the Transmission Provider's publication of the Transitional Cluster Study Phase 1 Report, each Interconnection Customer electing to proceed with Phase 2 of the Transitional Cluster Study must meet all of the following requirements:

a) Provide security equal to three million dollars ($3,000,000) inclusive of any security previously required by Section 7.2.1(e.). The security shall be in the form of (a) cash; (b) an irrevocable letter of credit in a form reasonably acceptable to Transmission Provider; or (c) for amounts exceeding the potential Withdrawal Penalty to be assigned under Section 7.2.6, other forms of security provided for in Section 11.5 of the LGIA (such as a surety bond) in a form reasonably acceptable to Transmission Provider. If the Interconnection Customer withdraws prior to executing an LGIA, the Transmission Provider shall be entitled to use the security as payment for (a) the final invoice for study costs and (b) the Withdrawal Penalty, after which any remaining amount of security shall be returned to Interconnection Customer. If the Interconnection Customer does not withdraw and executes an LGIA, the amount of security shall be increased or decreased as needed in order to reflect the cost estimate for Transmission Provider's Interconnection Facilities and Network Upgrades set forth in Appendix B to the LGIA. Once the LGIA is fully executed, the terms of the LGIA shall govern such security.

b) Demonstrate exclusive Site Control for the entire Generating Facility and all required Interconnection Facilities to the Point of Interconnection on the Transmission Provider's Transmission System.

c) Interconnection Customer shall provide one of the following:

   i. A contract binding upon the parties to the contract, for sale of the Generating Facility's energy, or the entire constructed Generating Facility, where the term of sale is not less than five (5) years, or

   ii. Reasonable evidence that the Generating Facility is included in an Resource Planning Entity's Resource Plan and, if required, has filed an application for a Certificate of Public Convenience and Necessity to construct the Generating Facility or has been selected in a Resource Solicitation Process, or

   iii. An executed Provisional Large Generator Interconnection Agreement filed with FERC that is not in suspension with 1) a commitment to construct the Generating Facility, 2) a Commercial Operation Date no later than 2024 and 3) a security deposit in addition to amount required under Section 4.1.2 where the total security deposit represents a reasonable estimation of the potential costs that could be ultimately allocated to the project in the transitional cluster study, or

   iv. Provide additional security equal to two million dollars ($2,000,000). The security shall be in the form of (a) cash; (b) an irrevocable letter of credit in a form reasonably acceptable to Transmission Provider; or (c) for

amounts exceeding the potential Withdrawal Penalty to be assigned under Section 7.2.6, other forms of security provided for in Section 11.5 of the LGIA (such as a surety bond) in a form reasonably acceptable to Transmission Provider. If the Interconnection Customer withdraws prior to executing an LGIA, the Transmission Provider shall be entitled to use the security as payment for (a) the final invoice for study costs and (b) the Withdrawal Penalty, after which any remaining amount of security shall be returned to Interconnection Customer. If the Interconnection Customer does not withdraw and executes an LGIA, the amount of security shall be increased or decreased as needed in order to reflect the cost estimate for Transmission Provider's Interconnection Facilities and Network Upgrades set forth in Appendix B to the LGIA. Once the LGIA is fully executed, the terms of the LGIA shall govern such security.

Once Transitional Cluster Study Phase 2 commences, the Transmission Provider shall complete an updated power flow/voltage analysis (if necessary), stability analysis and short circuit analysis for the Generating Facilities remaining in the Transitional Cluster Study pursuant to the procedures in Section 10.8(c.). The Transmission Provider shall use Reasonable Efforts to complete the Phase 2 analysis within one hundred fifty (150) Calendar Days. The results of this analysis shall identify the Interconnection Facilities and Network Upgrades expected to be required to reliably interconnect the Generating Facilities proceeding in the Transitional Cluster Study and shall provide a non-binding good-faith estimate of cost responsibility and a non-binding good-faith estimated time to construct. The Phase 2 Report shall identify each Interconnection Customer's estimated allocated costs for the Interconnection Facilities and Network Upgrades that would be borne by the Interconnection Customer under a future Interconnection Agreement.

If the Interconnection Customer withdraws the Interconnection Request at any time after Phase 2 commences, the Interconnection Customer shall be subject to the Withdrawal Penalty identified in Section 7.2.6 and the collected amount shall be distributed to fund future Cluster Study costs pursuant to Section 4.7.1.2, unless the Transmission Provider determines consistent with Good Utility Practice that a Withdrawal Penalty should not be assigned pursuant to Section 4.7.1.

7.2.4 Transitional Cluster Facilities Study.

If any Interconnection Customer within the Transitional Cluster Study withdraws its Interconnection Request after the Phase 2 Report is issued, the withdrawing Interconnection Customer shall be subject to the Withdrawal Penalty identified in Section 7.2.6 and the collected amount shall be distributed to fund re-study or future Cluster Study costs pursuant to Section 4.7.1.2, unless the Transmission Provider determines consistent with Good Utility Practice that a Withdrawal Penalty should not be assigned pursuant to Section 4.7.1. The Transmission Provider shall determine whether re-study of the Transitional Cluster Generating Facilities is required pursuant to Section 10.10 prior to executing the Facilities Study Agreement and returning it to the Interconnection Customers.

The Transmission Provider shall complete the Facilities Study for all Generating Facilities in the Transitional Cluster Study within one hundred fifty (150) Calendar Days pursuant to Section 11 except that the Readiness Milestone 4 requirement in Section 11.2 shall not apply to Interconnection Customers participating in the Transitional Cluster Study.

7.2.5 Transitional Cluster LGIA.

After the Facility Study Report is published, the remaining process shall proceed according to Section 14 of this LGIP with the exception of the security required in item (b) of Section 14.4 (posting Readiness Milestone 5), which shall not apply. If the Interconnection Customer withdraws its Interconnection Request or if the Generating Facility otherwise does not reach Commercial Operation, the security is fully refundable once the final invoice for study costs and Withdrawal Penalty is settled.

All LGIA negotiations shall be completed and the LGIA executed (or filed unexecuted) within sixty (60) Calendar Days of the tender of the draft LGIA or the Interconnection Request is deemed withdrawn unless extended by mutual agreement of Transmission Provider and Interconnection Customer. A change in the Commercial Operation Date shall not delay the construction of Transmission Provider's Interconnection Facilities or Network Upgrades if such delay negatively affects lower or equal queued projects. The Withdrawal Penalty for Interconnection Customers participating in the Transitional Cluster Process that have executed an LGIA is listed in Section 7.2.6, and the collected amount shall be distributed to fund future Cluster Study costs pursuant to Section 4.7.1.2, unless the Transmission Provider determines consistent with Good Utility Practice that a Withdrawal Penalty should not be assigned pursuant to Section 4.7.1. If the Interconnection Customer withdraws its Interconnection Request or its Generating Facility or otherwise does not reach Commercial Operation, the deposit is fully refundable once the final invoice for study costs and Withdrawal Penalty is settled.

7.2.6 Transitional Cluster Withdrawal Penalty.

The Withdrawal Penalty for Interconnection Customers electing to proceed to Phase 2 of the Transitional Cluster Study is equal to nine (9) times the Interconnection Request's total study cost is imposed.

Section 8. Serial Interconnection Feasibility Study.

A Transmission Provider shall administer a Serial Interconnection Study Process under Section 8 (Feasibility Study), Section 9 (System Impact Study), and Section 11 (Facilities Study), unless and until the Transmission Provider has elected to transition to the Definitive Interconnection Study Process as described in Section 10. A Transmission Provider will provide notice on OASIS upon transitioning to the Definitive Interconnection Study Process pursuant to the process described in Section 7.

8.1 Serial Interconnection Feasibility Study Agreement.

Where a Transmission Provider administers the Serial Interconnection Study Process, Transmission Provider shall provide to Interconnection Customer an Interconnection Feasibility Study Agreement in the form of Appendix 4 simultaneously with the acknowledgement of a valid Interconnection Request. The Interconnection Feasibility Study Agreement shall specify that Interconnection Customer is responsible for the actual cost of the Interconnection Feasibility Study. Within five (5) Business Days following the Scoping Meeting Interconnection Customer shall specify for inclusion in the attachment to the Interconnection Feasibility Study Agreement the Point(s) of Interconnection and any reasonable alternative Point(s) of Interconnection. Within five (5) Business Days following Transmission Provider's receipt of such designation, Transmission Provider shall tender to Interconnection Customer the Interconnection Feasibility Study Agreement signed by

Transmission Provider, which includes a good faith estimate of the cost for completing the Interconnection Feasibility Study. Interconnection Customer shall execute and deliver to Transmission Provider the Interconnection Feasibility Study Agreement along with a $10,000 deposit no later than thirty (30) Calendar Days after its receipt.

On or before the return of the executed Interconnection Feasibility Study Agreement to Transmission Provider, Interconnection Customer shall provide the technical data called for in Appendix 4, Attachment A.

If the Interconnection Feasibility Study uncovers any unexpected result(s) not contemplated during the Scoping Meeting, a substitute Point of Interconnection identified by either Interconnection Customer or Transmission Provider, and acceptable to the other, such acceptance not to be unreasonably withheld, will be substituted for the designated Point of Interconnection specified above without loss of Queue Position, and Re-studies shall be completed pursuant to Section 8.4 as applicable. For the purpose of this Section 8.1, if Transmission Provider and Interconnection Customer cannot agree on the substituted Point of Interconnection, then Interconnection Customer may direct that one of the alternatives as specified in the Interconnection Feasibility Study Agreement, as specified pursuant to Section 4.1.1, shall be the substitute.

If Interconnection Customer and Transmission Provider agree to forgo the Serial Interconnection Feasibility Study, Transmission Provider will initiate a Serial Interconnection System Impact Study under Section 9 of this LGIP and apply the $10,000 deposit towards the Interconnection System Impact Study.

8.2 Scope of Serial Interconnection Feasibility Study.

The Interconnection Feasibility Study shall preliminarily evaluate the feasibility of the proposed interconnection to the Transmission System.

The Interconnection Feasibility Study will consider the Base Case as well as all generating facilities (and with respect to (iii), any identified Network Upgrades) that, on the date the Interconnection Feasibility Study is commenced: (i) are directly interconnected to the Transmission System; (ii) are interconnected to Affected Systems and may have an impact on the Interconnection Request; (iii) have a pending higher queued Interconnection Request to interconnect to the Transmission System; and (iv) have no Queue Position but have executed an LGIA or requested that an unexecuted LGIA be filed with FERC. The Interconnection Feasibility Study will consist of a power flow and short circuit analysis. The Interconnection Feasibility Study will provide a list of facilities and a non-binding good faith estimate of cost responsibility and a non-binding good faith estimated time to construct.

8.3 Serial Interconnection Feasibility Study Procedures.

Transmission Provider shall utilize existing studies to the extent practicable when it performs the study. Transmission Provider shall use Reasonable Efforts to complete the Interconnection Feasibility Study no later than forty-five (45) Calendar Days after Transmission Provider receives the fully executed Interconnection Feasibility Study Agreement. At the request of Interconnection Customer or at any time Transmission Provider determines that it will not meet the required time frame for completing the Interconnection Feasibility Study, Transmission Provider shall notify Interconnection Customer as to the schedule status of the Interconnection Feasibility Study. If Transmission Provider is unable to complete the Interconnection Feasibility Study within that time period,

it shall notify Interconnection Customer and provide an estimated completion date with an explanation of the reasons why additional time is required. Upon request, Transmission Provider shall provide Interconnection Customer supporting documentation, workpapers and relevant power flow, short circuit and stability databases for the Interconnection Feasibility Study, subject to confidentiality arrangements consistent with Section 16.1.

Transmission Provider shall study the Interconnection Request at the level of service requested by the Interconnection Customer, unless otherwise required to study the full Generating Facility Capacity due to safety or reliability concerns.

8.3.1 Meeting with Transmission Provider.
Within ten (10) Business Days of providing an Interconnection Feasibility Study report to Interconnection Customer, Transmission Provider and Interconnection Customer shall meet to discuss the results of the Interconnection Feasibility Study.

8.4 Re-Study.
If Re-Study of the Interconnection Feasibility Study is required due to a higher queued project dropping out of the queue, or a modification of a higher queued project subject to Section 5.4, or re-designation of the Point of Interconnection pursuant to Section 8.1 Transmission Provider shall notify Interconnection Customer in writing. Such Re-Study shall take no longer than forty-five (45) Calendar Days from the date of the notice. Any cost of Re-Study shall be borne by the Interconnection Customer being re-studied.

Section 9. Serial Interconnection System Impact Study.

9.1 Serial Interconnection System Impact Study Agreement.
Unless otherwise agreed, pursuant to the Scoping Meeting provided in Section 4.4.6, simultaneously with the delivery of the Interconnection Feasibility Study to Interconnection Customer, Transmission Provider shall provide to Interconnection Customer a Serial Interconnection System Impact Study Agreement in the form of Appendix 5 to this LGIP. The Serial Interconnection System Impact Study Agreement shall provide that Interconnection Customer shall compensate Transmission Provider for the actual cost of the Serial Interconnection System Impact Study. Within three (3) Business Days following the Interconnection Feasibility Study results meeting, Transmission Provider shall provide to Interconnection Customer a non-binding good faith estimate of the cost and timeframe for completing the Interconnection System Impact Study.

9.2 Execution of Serial Interconnection System Impact Study Agreement.
Interconnection Customer shall execute the Serial Interconnection System Impact Study Agreement and deliver the executed Serial Interconnection System Impact Study Agreement to Transmission Provider no later than thirty (30) Calendar Days after its receipt along with demonstration of Site Control, and a $50,000 deposit.

If Interconnection Customer does not provide all such technical data when it delivers the Serial Interconnection System Impact Study Agreement, Transmission Provider shall notify Interconnection Customer of the deficiency within five (5) Business Days of the receipt of the executed Serial Interconnection System Impact Study Agreement and Interconnection Customer shall cure the deficiency within ten (10) Business Days of receipt of the notice,

provided, however, such deficiency does not include failure to deliver the executed Serial Interconnection System Impact Study Agreement or deposit.

If the Serial Interconnection System Impact Study uncovers any unexpected result(s) not contemplated during the Scoping Meeting and the Interconnection Feasibility Study, a substitute Point of Interconnection identified by either Interconnection Customer or Transmission Provider, and acceptable to the other, such acceptance not to be unreasonably withheld, will be substituted for the designated Point of Interconnection specified above without loss of Queue Position, and restudies shall be completed pursuant to Section 9.6 as applicable. For the purpose of this Section 9.2, if Transmission Provider and Interconnection Customer cannot agree on the substituted Point of Interconnection, then Interconnection Customer may direct that one of the alternatives as specified in the Interconnection Feasibility Study Agreement, as specified pursuant to Section 4.1.1, shall be the substitute.

9.3 Scope of Serial Interconnection System Impact Study.

The Serial Interconnection System Impact Study shall evaluate the impact of the proposed interconnection on the reliability of the Transmission System. The Serial Interconnection System Impact Study will consider the Base Case as well as all generating facilities (and with respect to (iii) below, any identified Network Upgrades associated with such higher queued interconnection) that, on the date the Serial Interconnection System Impact Study is commenced: (i) are directly interconnected to the Transmission System; (ii) are interconnected to Affected Systems and may have an impact on the Interconnection Request; (iii) have a pending higher queued Interconnection Request to interconnect to the Transmission System; and (iv) have no Queue Position but have executed an LGIA or requested that an unexecuted LGIA be filed with FERC.

The Serial Interconnection System Impact Study will consist of a short circuit analysis, a stability analysis, and a power flow analysis. The Serial Interconnection System Impact Study will state the assumptions upon which it is based; state the results of the analyses; and provide the requirements or potential impediments to providing the requested interconnection service, including a preliminary indication of the cost and length of time that would be necessary to correct any problems identified in those analyses and implement the interconnection. For purposes of determining necessary Interconnection Facilities and Network Upgrades, the System Impact Study shall consider the level of Interconnection Service requested by the Interconnection Customer, unless otherwise required to study the full Generating Facility Capacity due to safety or reliability concerns. The Serial Interconnection System Impact Study will provide a list of facilities that are required as a result of the Interconnection Request and a non-binding good faith estimate of cost responsibility and a non-binding good faith estimated time to construct.

9.4 Serial Interconnection System Impact Study Procedures.

Transmission Provider shall coordinate the Serial Interconnection System Impact Study with any Affected System that is affected by the Interconnection Request pursuant to Section 4.6 above. Transmission Provider shall utilize existing studies to the extent practicable when it performs the study. Transmission Provider shall use Reasonable Efforts to complete the Serial Interconnection System Impact Study within ninety (90) Calendar Days after the receipt of the Serial Interconnection System Impact Study Agreement or notification to proceed, study payment, and technical data.

At the request of Interconnection Customer or at any time Transmission Provider determines that it will not meet the required time frame for completing the Serial Interconnection System Impact Study, Transmission Provider shall notify Interconnection Customer as to the schedule status of the Serial Interconnection System Impact Study. If Transmission Provider is unable to complete the Serial Interconnection System Impact Study within the time period, it shall notify Interconnection Customer and provide an estimated completion date with an explanation of the reasons why additional time is required. Upon request, Transmission Provider shall provide Interconnection Customer all supporting documentation, workpapers and relevant pre-Interconnection Request and post-Interconnection Request power flow, short circuit and stability databases for the Serial Interconnection System Impact Study, subject to confidentiality arrangements consistent with Section 16.1.

9.5 Meeting with Transmission Provider.

Within ten (10) Business Days of providing an Serial Interconnection System Impact Study report to Interconnection Customer, Transmission Provider and Interconnection Customer shall meet to discuss the results of the Interconnection System Impact Study.

9.6 Re-Study.

If Re-Study of the Serial Interconnection System Impact Study is required due to a higher queued project dropping out of the queue, or a modification of a higher queued project subject to Section 5.4, or re-designation of the Point of Interconnection pursuant to Section 9.2, Transmission Provider shall notify Interconnection Customer in writing. Such Re-Study shall take no longer than sixty (60) Calendar Days from the date of notice. Any cost of Re-Study shall be borne by the Interconnection Customer being re-studied.

Section 10. Definitive Interconnection Study Process.

For a Transmission Provider that has transitioned to the Definitive Interconnection Study Process under the procedure described in Section 7, the Transmission Provider shall annually administer a Definitive Interconnection System Impact Cluster Study Process as provided for in this Section. The diagram attached as Appendix 6-1 provides an overview and timeline of initiation of a Definitive Interconnection Study: the DISIS Request Window, Customer Engagement Window, and Phase 1 of the DISIS.

Interconnection Customers may initially elect to obtain an Informational Interconnection Study, as provided for under Section 3, prior to submitting an Interconnection Request and proceeding into the Definitive Interconnection Study Process. Interconnection Customers that elect to withdraw from the Definitive Interconnection Study Process may be subject to a Withdrawal Penalty, as further addressed in Section 4.7.1.

10.1 Initiation of a Definitive Interconnection System Impact Study Cluster.

The Transmission Provider shall accept Interconnection Requests during the "DISIS Request Window." A DISIS Request Window shall open annually on January 1 and shall remain open for 180 Calendar Days or the following Business Day if the 180th day falls on a weekend or NERC recognized holiday.

If one or more valid Interconnection Requests are received, for sixty (60) Calendar Days following the close of the DISIS Request Window (the "Customer Engagement Window"), the Transmission Provider shall work with applicable Interconnection Customers to build

models, verify data, hold stakeholder meetings (including Scoping Meetings, as appropriate), cure any deficiencies in the Interconnection Request(s) as described in Section 4.4.5, and generally prepare for the start of the Definitive Interconnection System Impact Study. Notwithstanding the preceding sentence and upon written consent of all Interconnection Customers within a specific Cluster, the Transmission Provider may shorten the "Customer Engagement Window" in order to start the Definitive Interconnection System Impact Study earlier. Within the first ten (10) Business Days following the close of the DISIS Request Window, the Transmission Provider shall post on its OASIS site a list of Interconnection Requests for that Cluster, identifying for each Interconnection Request: (i) the location by county and state; (ii) the transmission substation or transmission line or lines where the interconnection will be made; (iii) cluster being requested; and (iv) the type of Generating Facility to be constructed including fuel type such as wind, natural gas, coal, or solar.

Prior to the close of the Customer Engagement Window, each Interconnection Customer shall i) execute a DISIS Agreement pursuant to Section 10.6; ii) provide initial security equal to 1 times the Section 4.1.2 study deposit amount to enter the DISIS; and iii) provide evidence satisfactory to the Transmission Provider of either an initial Readiness Milestone ("M1"), as described in Section 10.11.1, or additional security in the form of an irrevocable letter of credit or cash in lieu of the M1 Readiness Milestone equal to one times the Study Deposit required in Section 10.11.6.

At the end of the Customer Engagement Window, all Interconnection Requests meeting the foregoing readiness requirements and that have an executed DISIS Agreement shall be included in that DISIS Cluster. Any Interconnection Requests not deemed sufficient pursuant to Section 4.4.5 or that are undergoing dispute resolution pursuant to Section 16.6 at the close of the Customer Engagement Window shall not be included in the commencing DISIS Cluster. Immediately following the Customer Engagement Window, the Transmission Provider shall initiate the Definitive Interconnection System Impact Study process described in more detail in Section 10.

10.2 Initiation of a Resource Solicitation Cluster.

At any time, and upon request of a Resource Planning Entity, a Transmission Provider may initiate a Resource Solicitation Cluster. Within ten (10) Business Days of receipt of a request to perform a Resource Solicitation Cluster that includes valid Interconnection Requests as described in Section 4.4, Transmission Provider and Resource Planning Entity shall meet to determine a mutually agreeable scope of study and timeframe to initiate the Resource Solicitation Cluster.

The Transmission Provider may administer the Resource Solicitation Cluster either separately or as part of a Definitive Interconnection System Impact Study Cluster initiated pursuant to Section 10.2. Where the Resource Solicitation Cluster is studied separately from the Definitive Interconnection System Impact Study Cluster, the Resource Solicitation Cluster shall respect Queue Position and shall be studied as its own Cluster based upon a Resource Planning Entity-designated Queue Number where the Resource Planning Entity acts as authorized representative for Interconnection Customer(s) in connection with a Resource Solicitation Cluster and the Transmission Provider shall Study the Cluster based upon the Queue Number of the Resource Solicitation Cluster relative to the Queue Position of all other Interconnection Requests/Clusters.

The Transmission Provider shall publicize the scope of study and timeframe to initiate the Resource Solicitation Cluster. The timeline shall indicate the close of the Customer Engagement Window for that Resource Solicitation Cluster. Where the Transmission Provider is administering the Resource Solicitation Cluster as part of a Definitive Interconnection System Impact Study Cluster the Definitive Interconnection System Impact Study shall proceed as described in Section 10.

After Transmission Provider completes the Definitive Interconnection System Impact Studies for the requested combinations, the results will be provided (Phase 1 Report, Phase 2 Report, Phase 3 Report, etc.; as applicable under Section 10.8) to the Resource Planning Entity for use in the Resource Solicitation Process. The results will be posted on Transmission Provider's OASIS consistent with the posting of other study results.

A Generating Facility that initially is associated with a Queue Position through the Resource Solicitation Process may also reserve a later Queue Position separate from the Resource Solicitation Cluster. In either case, the Interconnection Customer must meet all requirements associated with maintaining each Queue Position for the Generating Facility. In the event a Generating Facility has multiple Queue Positions, it shall not be double counted in the study models.

After receipt of the Phase 2 Report, the Resource Planning Entity must select one of the studied combinations in the Resource Solicitation Process prior to the commencement of any Facilities Study associated with Generating Facilities selected in the Resource Solicitation Process. Prior to the completion of the Facilities Study for the combination of Generating Facilities selected, the Resource Planning Entity may replace Interconnection Customers, subject to any necessary Re-Study pursuant to Sections 10.8(e.) or 10.10. While conducting the Definitive Interconnection Study Process, the Transmission Provider may suspend further action on the Interconnection Requests in the Resource Solicitation Process that are not included in the selected combination. Once a Generating Facility is rejected in a Resource Solicitation Cluster Process administered separately from a Definitive Interconnection System Impact Study Cluster, the Generating Facility shall lose the Queue Position it held as part of the Resource Solicitation Process. If a Generating Facility is selected by the Resource Planning Entity at the conclusion of the Resource Solicitation Process, the Generating Facility may no longer maintain more than one Queue Position

10.3 Definitive Interconnection Study Process Study Cost Allocation.

The administering Transmission Provider shall determine each Interconnection Customer's share of the costs of completing the DISIS Cluster Study (including general queue administration costs and overheads) by allocating: (1) ten percent (10%) of the applicable study costs to Interconnection Customers on a per capita basis based on number of Interconnection Requests included in the applicable Cluster; and (2) ninety percent (90%) of the applicable study costs to Interconnection Customers on a pro-rata basis based on requested megawatts included in the applicable Cluster. If an Interconnection Customer exits the Cluster prior to the Transmission Provider commencing Phase 2 pursuant to Section 10.8(c.) (including where the Transmission Provider determines through Phase 1 that a distribution-level System Impact Study should be completed for one or more distribution-level Interconnection Customers in lieu of being evaluated through Phase 2), then the Transmission Provider shall determine each Interconnection Customer's costs of preparing for and completing the DISIS prior to commencing Phase 2 and shall then separately determine each remaining Interconnection Customer's costs for the remainder of the DISIS.

If a Phase 3 restudy or general restudy is required pursuant to Sections 10.8(e) or 10.10, then Transmission Provider shall allocate the costs of the restudy as provided for in this section amongst the Interconnection Customers included in the restudy. If an Interconnection Customer proposes non-material changes to its Interconnection Request requiring limited restudy, the costs of the limited restudy shall be directly assigned to the requesting Interconnection Customer. The Facilities Study for a Transmission Provider administering the Definitive Interconnection Study Process is an individual study and the costs for each Facilities Study is directly assigned to the Interconnection Customer associated with such study.

10.4 Transmission Provider's Interconnection Facilities and Network Upgrade Cost Allocation.

The Transmission Provider shall calculate each Interconnection Customer's share of Upgrades and Interconnection Facilities costs identified in Cluster Studies in the following manner:

a) Station equipment Network Upgrades, including all switching stations, shall be allocated based on the number of Generating Facilities interconnecting at an individual station on a per capita basis (i.e. on a per Interconnection Request basis). If multiple Interconnection Customers are connecting to the Transmission Provider's Transmission System through shared Interconnection Facility(ies), those Interconnection Customers shall be considered one Interconnection Customer for the per capita calculation described in the preceding sentence. Shared Interconnection Facilities shall be allocated based on the number of Generating Facilities sharing that Interconnection Facility on a per capita basis.

b) All Network Upgrades other than those identified in Section 10.8(a.) shall be allocated based on the proportional impact of each individual Generating Facility in the Cluster Studies on such Network Upgrades. The proportional impact of such Network Upgrades shall be calculated as follows. All transmission lines and transformers identified as Network Upgrades shall be allocated using distribution factor analysis. Voltage support related Network Upgrades shall be allocated using a voltage impact analysis which will identify each Generating Facility's contribution to the voltage violation. Network Upgrades associated with upgrading existing breakers due to short circuit current exceeding breaker capability shall be allocated proportionally based on the short circuit current contribution of each request.

c) Costs of Distribution Upgrades shall be allocated or assigned to each Interconnection Customer based upon the proportional impact of each individual Generating Facility in the Cluster Study based upon the need for the Distribution Upgrade. Distribution line work (e.g., reconductoring) shall be allocated to Generating Facilities contributing to the Upgrade on a per MW basis, based upon location (% of Upgrade). All other Distribution Upgrades shall be allocated on a per capita basis (i.e. on a per Interconnection Request basis) based upon the number of projects on the feeder or substation contributing to the need for the Upgrade.

d) Costs of Transmission Provider's Interconnection Facilities are directly assigned to the Interconnection Customer(s) using such facilities.

Interconnection Customer funding of Network Upgrades are eligible for credits as provided in Article 11 of the LGIA.

10.5 Definitive Interconnection System Impact Study Agreement.
Unless otherwise agreed, pursuant to the Scoping Meeting provided for in Section 4.4.7, within thirty (30) Calendar Days of the Transmission Provider's acknowledgement of a valid Interconnection Request requesting that a Definitive Interconnection System Impact Study be performed, the Transmission Provider shall provide to the Interconnection Customer a DISIS Agreement in the form of Appendix 6-3 to this LGIP. The DISIS Agreement shall provide that Interconnection Customer shall compensate the Transmission Provider for the actual cost of the DISIS. At least seven (7) Calendar Days before the close of a Customer Engagement Window, the Transmission Provider shall provide to each Interconnection Customer proposing to enter the DISIS Cluster a non-binding updated good faith estimate of the cost and timeframe for completing the Definitive Interconnection System Impact Study.

10.6 Execution of Definitive Interconnection System Impact Study Agreement.
The Interconnection Customer shall execute the DISIS Agreement and deliver the executed DISIS Agreement to Transmission Provider no later than the close of the Customer Engagement Window or its Interconnection Request shall be deemed withdrawn by Transmission Provider.

10.7 Scope of Definitive Interconnection System Impact Study.
The Definitive Interconnection System Impact Study shall evaluate the impact of the proposed interconnection(s) within the Cluster on the reliability of the Transmission System. The Definitive Interconnection System Impact Study will consider the Transmission Provider's Base Case as well as all Generating Facilities (and with respect to (iii) below, any identified Network Upgrades associated with such higher queued requests) that, on the date the DISIS Request Window closes: (i) are existing and directly interconnected to the Transmission System; (ii) are existing and interconnected to Affected Systems and may have an impact on the Interconnection Request; (iii) have a pending Interconnection Request to interconnect to the Transmission System with a higher queue position than the DISIS Cluster, either individually under Section 5.2 or included in a higher queued Cluster Study; and (iv) have executed an LGIA or requested that an unexecuted LGIA be filed with FERC.

As set forth in more detail in Section 10.8 below, the Definitive Interconnection System Impact Study is a phased study under which the first phase (Phase 1) consists of a power flow and voltage analysis that is followed by a second phase (Phase 2) that consists of a short circuit analysis and a stability analysis. Any DISIS re-studies (Phase 3) shall consist of a power flow/voltage analysis, a short circuit analysis, and/or a stability analysis, as needed. The Definitive Interconnection System Impact Study report shall state the assumptions upon which it is based; state the results of the analyses; and provide the requirements or potential impediments to providing the requested interconnection, including a preliminary indication of the cost and length of time that would be necessary to correct any problems identified in those analyses and implement the interconnection. The Definitive Interconnection System Impact Study shall provide a list of facilities that are required as a result of the Interconnection Request and a non-binding good faith estimate of cost responsibility and a nonbinding good faith estimated time to construct.

For purposes of clustering Interconnection Requests, the Transmission Provider may make reasonable changes to the requested Point(s) of Interconnection as part of the DISIS to

facilitate the efficient and reliable interconnection of Interconnection Customers at common Points of Interconnection. The Transmission Provider shall notify Interconnection Customers in writing of any intended changes to the requested Point(s) of Interconnection and the Point(s) of Interconnection shall only change upon mutual agreement. Where the Interconnection Customer agrees to a Transmission Provider's proposal to change the Point of Interconnection and the change results in a loss of Site Control, the Interconnection Customer shall have 150 days to provide affirmation and reasonable documentation, if requested by the Transmission Provider, that Site Control to the new Point of Interconnection has been obtained or the Interconnection Customer shall be required to post the additional security required by Section 10.11.6 to continue to proceed through the Definitive Interconnection Study process.

Where an Interconnection Customer is proposing to interconnect a Generating Facility to the Distribution System and has been determined through Phase 1 not to cause or contribute to the need for Network Upgrades requiring further study in Phase 2, the Transmission Provider shall complete a Distribution level System Impact Study, as further discussed in Section 10.8(a.) below.

10.8 Definitive Interconnection System Impact Study Procedures.

Transmission Provider shall coordinate the Definitive Interconnection System Impact Study with any Affected System that is affected by the Interconnection Request pursuant to Section 4.6 above. Transmission Provider shall utilize existing studies to the extent practicable when it performs the DISIS. Interconnection Requests for DISIS may be submitted only within the DISIS Request Window and Transmission Provider shall initiate the Definitive Interconnection Study Process pursuant to Section 4.4.2 and 10.1.

The diagrams attached as Appendix 6-2 provides an overview and timeline of the Definitive Interconnection Study Process, including the Phases and milestones associated with the Definitive Interconnection System Impact Study.

a. The DISIS Cluster shall consist of all eligible Interconnection Requests that have (i) executed a DISIS Agreement pursuant to Section 10.6; (ii) provided initial security equal to 1 times the Section 4.1.2 study deposit amount to enter the DISIS in the form of an irrevocable letter of credit or cash; and (iii) provided evidence satisfactory to the Transmission Provider of either an initial Readiness Milestone ("M1"), as described in Section 10.11.1, or additional security in the form of an irrevocable letter of credit or cash in lieu of the M1 Readiness Milestone equal to one times the study deposit required in Section 10.11.6 before the close of the Customer Engagement Window pursuant to Section 10.1. The Transmission Provider shall use Reasonable Efforts to complete the first phase (Phase 1) consisting of a power flow and voltage analysis within ninety (90) Calendar Days. The Phase 1 Report shall identify the Transmission Provider's Interconnection Facilities and Transmission Provider's Network Upgrades that are expected to be required as a result of the Interconnection Request(s) and a non-binding good-faith indicative level estimate of cost responsibility and a non-binding good-faith estimated time to construct. After issuing the Phase 1 Report, the Transmission Provider shall hold a second thirty (30) Calendar Day Customer Engagement Window and will host an open meeting ("Phase 1 Report Meeting") with Interconnection Customer(s) and identified Affected System Operators within ten (10) Business Days of publishing the DISIS Phase 1 results on the Transmission Provider's OASIS site.

Where the Transmission Provider determines through the initial Phase 1 study that a proposed distribution-level Interconnection Customer will not cause or contribute to the need for Network Upgrades, the Transmission Provider shall notify the Interconnection Customer in writing during the post-Phase 1 Customer Engagement Window that the Transmission Provider shall complete an individual Distribution-level System Impact Study for the proposed Generating Facility within fifty (50) Business Days. Upon issuance of the individual Distribution-level System Impact Study Report, the Interconnection Customer would then proceed immediately to the Section 11 Facilities Study process. Interconnection Customers that are studied for distribution level impacts only must continue to meet all Readiness Milestone requirements (or provide security in lieu of the Readiness Milestone) to proceed to Facilities Study under Section 11.

b. Within twenty (20) Calendar Days of the Phase 1 Report Meeting, all Interconnection Customers proceeding in the DISIS to Phase 2 are required to satisfy the requirements of Readiness Milestone 2 ("M2") as described in Section 10.11.2. Interconnection Customers that do not provide the Readiness Milestone (or provide additional security in lieu of the Readiness Milestone described in Section 10.11.6) by the required date shall be deemed withdrawn from the Queue and subject to a Withdrawal Penalty pursuant to Section 4.7.1.

c. Interconnection Customers who satisfy the M2 readiness requirements or provide the required security by the Transmission Provider shall continue in to the second phase ("Phase 2") of the Definitive Interconnection System Impact Study. Phase 2 consists of an updated power flow/voltage analysis (if necessary), stability analysis and short circuit analysis for the Interconnection Customers remaining in the DISIS Cluster. The Transmission Provider shall use Reasonable Efforts to complete the Phase 2 analysis within one hundred fifty (150) Calendar Days. The results of this analysis shall identify the Interconnection Facilities and Network Upgrades expected to be required to reliably interconnect the Generating Facilities in that DISIS Cluster. The Phase 2 Report shall provide non-binding estimates of the costs of required Network Upgrades and Interconnection Facilities allocated to each Interconnection Customer within the Cluster. The Transmission Provider shall hold a third thirty (30) Calendar Day Customer Engagement Window and will host an open meeting ("Phase 2 Report Meeting") with Interconnection Customer(s) and identified Affected System Operators within ten (10) Business Days of publishing the DISIS Phase 2 results on the Transmission Provider's OASIS site.

d. Within twenty (20) Calendar Days of the Phase 2 Report Meeting, each Interconnection Customer with an Interconnection Request in the Cluster is required to provide Readiness Milestone 3 ("M3") as described in Section 10.11.3. Interconnection Customers that do not provide the Readiness Milestone (or provide security *in lieu* of the Readiness Milestone described in Section 10.11.6) by the required date shall be deemed withdrawn from the Queue pursuant to Section 4.7.1.

    i. If all Interconnection Customers in the Cluster provide M3 and no Interconnection Customers withdraw from the Queue at this stage, the Definitive Interconnection Study Process shall advance to the Facilities Study (Section 11). The Transmission Provider shall notify Interconnection Customers in the Cluster in writing that Phase 3 is not required and simultaneously provide the Facilities Study Agreement in the form of Appendix 7.

ii. If one or more Interconnection Customer(s) withdraws from the Cluster, the Transmission Provider shall determine if a full System Impact Re-study is necessary. If the Transmission Provider determines a re-study is not necessary and Phase 3 is not required, the Transmission Provider shall provide an updated Phase 2 Report within thirty (30) Calendar Days of such determination and the Definitive Interconnection Study Process advances to the Interconnection Facilities Study (Section 11). When the updated Phase 2 report is issued, the Transmission Provider shall notify Interconnection Customers in the Cluster in writing that Phase 3 is not required and simultaneously provide the Facilities Study Agreement in the form of Appendix 7.

iii. If one or more Interconnection Customers withdraws from the Cluster and the Transmission Provider determines a full System Impact Re-study is necessary, the Transmission Provider will continue with System Impact restudies ("Phase 3") until the Transmission Provider determines that no further re-studies are required. If Interconnection Customer withdraws its Interconnection Request after the Phase 3 restudy described in Section 10.8(e) or during the Facilities Study and the Transmission Provider determines system impact level studies are necessary, the Cluster shall be restudied under the terms of Phase 3. Transmission Provider shall notify Interconnection Customers in the Cluster in writing and post on OASIS that a re-study is required.

e. If required by the Transmission Provider under Section 10.8(d.) (iii.), Interconnection Requests shall continue with the third phase ("Phase 3") of the Definitive Interconnection System Impact Study. Phase 3 may consist of updated power flow/voltage analysis, stability analysis, and/or short circuit analysis if necessary for the Interconnection Requests remaining in the Cluster. The Transmission Provider shall use Reasonable Efforts to complete the Phase 3 analysis within one hundred fifty (150) Calendar Days. The results of this analysis shall identify the Transmission Provider's Interconnection Facilities and Transmission Provider's Network Upgrades expected to be required to reliably interconnect the Generating Facilities in that Cluster and shall provide non-binding estimates for the required upgrades. The Phase 3 Report shall identify each Interconnection Request's estimated allocated costs for Interconnection Facilities and Network Upgrades. The Transmission Provider shall hold a fourth thirty (30) Calendar Day Customer Engagement Window and will host an open meeting ("Phase 3 Report Meeting") with Interconnection Customer(s) and identified Affected System Operators within ten (10) Business Days of publishing the DISIS Phase 3 results on the Transmission Provider's OASIS site. The Transmission Provider shall notify Interconnection Customers in the Cluster in writing when no further re-studies are required and simultaneously provide the Interconnection Customer(s) a Facilities Study Agreement in the form of Appendix 7. If additional restudies are required before moving to Facilities Study, within twenty (20) Calendar Days of the Phase 3 Report Meeting (or Phase 3 Updated Report Meeting), all Interconnection Customers are required to provide an updated Readiness Milestone 3 ("M3") as described in Section 10.11.3 . Interconnection Customers that do not provide the Readiness Milestone (or provide security in lieu of the Readiness Milestone described in Section 10.11.6) by the required date shall be deemed withdrawn from the Queue pursuant to Section 4.7. Transmission Provider shall notify Interconnection Customers in the Cluster in writing when no further re-studies are required and simultaneously provide the Interconnection Facilities Agreement in the form of Appendix 7.

f. Within thirty (30) Calendar Days of the notice that no System Impact restudies are needed and delivery of a Facilities Study Agreement by the Transmission Provider, each

Interconnection Customer with an Interconnection Request in the Cluster that has completed the DISIS process is required to (i) return an executed Facilities Study Agreement in the form of Appendix 7 (completed and including all required data identified therein); and (ii) provide Readiness Milestone 4 ("M4") as described in Section 10.11.4 (or provide additional security in lieu of the Readiness Milestone described in Section 10.11.6). Interconnection Customers that do not provide the executed Facilities Study Agreement and Readiness Milestone 4(or provide security in lieu of the Readiness Milestone 4 described in Section 10.11.6) by the required date shall be deemed withdrawn from the Queue and subject to a Withdrawal Penalty pursuant to Section 4.7.1.

At the request of an Interconnection Customer or at any time the Transmission Provider determines that it will not meet the indicated timeframe for completing the DISIS, the Transmission Provider shall notify Interconnection Customer(s) in writing as to the schedule status of the DISIS Cluster. If the Transmission Provider is unable to complete the DISIS within the time period, it shall notify Interconnection Customer(s) and provide an estimated completion date with an explanation of the reasons why additional time is required. Upon request, Transmission Provider shall provide Interconnection Customer all supporting documentation, workpapers, and relevant pre-Interconnection Request and post-Interconnection Request power flow, short circuit and stability databases for the DISIS, subject to confidentiality arrangements consistent with Section 16.1.

10.9 Post-DISIS Report Meeting.

Within ten (10) Business Days of furnishing a final DISIS study report to Interconnection Customer(s) with an Interconnection Request in the Cluster and posting the report on OASIS, the Transmission Provider shall convene an open meeting to discuss the study results. The Transmission Provider shall, upon request, also make itself available to meet with individual Interconnection Customers after the study report is provided.

10.10 Re-Study.

If Re-Study of the Definitive Interconnection System Impact Study other than the re-study described above in 10.8(e.) is required due to a higher or equal priority queued Interconnection Request dropping out of the Queue, or a modification of a higher queued Interconnection Request subject to Section 5.4, Transmission Provider shall notify Interconnection Customer(s) in writing. The Transmission Provider shall make Reasonable Efforts to ensure such Re-Study take no longer than one hundred fifty (150) Calendar Days from the date of notice. Any cost of Re-Study shall be borne by Interconnection Customer(s) being re-studied.

10.11 Readiness Milestones.

Satisfaction of the requirements of Readiness Milestones 1, 2, 3, and 4 are required throughout the Definitive Interconnection Study Process to demonstrate the readiness of the Interconnection Customer to develop the Generating Facility. Satisfaction of the requirements of Readiness Milestones 1, 2, 3 are required during the Definitive Interconnection System Impact Study Process. Readiness Milestone 4 is required after the Definitive Interconnection System Impact Study Process has concluded, but before the Facilities Study commences. Satisfaction of the requirements of Readiness Milestone 5 is required after the LGIA is executed as described in Section 10.11.5. An Interconnection Customer who does not satisfy the requirements of an applicable Readiness Milestone (or provide additional security in lieu thereof described in Section 10.11.6) is subject to

withdrawal of its Interconnection Request from the queue and payment of a withdrawal penalty pursuant to Section 4.7.1.

10.11.1 Readiness Milestone 1 ("M1").

M1 is satisfied by the Interconnection Customer providing one of the three options below. M1 may also be satisfied by providing additional security described in Section 10.11.6 in lieu of demonstrating readiness.

a) Executed term sheet (or comparable evidence) related to a contract, binding upon the parties to the contract, for sale of (i) the constructed Generating Facility, (ii) the Generating Facility's energy, or (iii) the Generating Facility's ancillary services if the Generating Facility is an electric storage resource; where the term of sale under (ii) or (iii) is not less than five (5) years.

b) Reasonable evidence the Generating Facility has been selected by a Resource Planning Entity in a Resource Plan or is offering to sell its output through a Resource Solicitation Process; or

c) Provisional Large Generator Interconnection Agreement accepted for filing at FERC. Such an agreement shall not be suspended and shall include a commitment to construct the Generating Facility.

10.11.2 Readiness Milestone 2 ("M2").

M2 is satisfied by the Interconnection Customer providing one of the three options below. M2 may also be satisfied by providing additional security as described in Section 10.11.6 in lieu of demonstrating readiness.

a) Executed term sheet (or comparable evidence) related to a contract, binding upon the parties to the contract, for sale of (i) the constructed Generating Facility, (ii) the Generating Facility's energy, or (iii) the Generating Facility's ancillary services if the Generating Facility is an electric storage resource; where the term of sale under (ii) or (iii) is not less than five (5) years.

b) Reasonable evidence that the Project has been selected by a Resource Planning Entity in a Resource Plan or is offering to sell its output through a Resource Solicitation Process; or

c) Provisional Large Generator Interconnection Agreement accepted for filing at FERC. Such an agreement shall not be suspended and shall include a commitment to construct the Generating Facility.

10.11.3 Readiness Milestone 3 ("M3").

M3 is satisfied by the Interconnection Customer providing one of the three options below. M3 may also be satisfied by providing additional security described in Section 10.11.6 in lieu of demonstrating readiness.

a) Executed contract, binding upon the parties to the contract, for sale of (i) the constructed Generating Facility, (ii) the Generating Facility's energy, or (iii) the Generating Facility's ancillary services if the Generating Facility is an electric storage resource; where under (ii) or (iii) the term of sale is not less than five (5) years.

b) Reasonable evidence that the project has been selected by a Resource Planning Entity in a Resource Plan or is offering to sell its output through a Resource Solicitation Process; or

c) An unsuspended Provisional Large Generator Interconnection Agreement accepted for filing by FERC with reasonable evidence that the Generating Facility and Interconnection Facilities have commenced design and engineering.

10.11.4 Readiness Milestone 4 ("M4").

M4 is satisfied by the Interconnection Customer providing one of the three options below. M4 may also be satisfied by providing security as described in Section 10.11.6 in lieu of demonstrating readiness.

a) Executed contract, binding upon the parties to the contract, for sale of (i) the constructed Generating Facility, (ii) the Generating Facility's energy, or (iii) the Generating Facility's ancillary services and capacity if the Generating Facility is an electric storage resource; where under (ii) or (iii) the term of sale is not less than five (5) years;

b) Reasonable evidence that the project has been selected by a Resource Planning Entity in a Resource Plan and, if required, has filed an application for a Certificate of Public Convenience and Necessity to construct the Generating Facility or has been selected in a Resource Solicitation Process; or

c) An unsuspended Provisional Large Generator Interconnection Agreement accepted for filing by FERC with reasonable evidence that the Generating Facility and Interconnection Facilities have commenced construction.

10.11.5 Readiness Milestone 5 ("M5").

All Interconnection Customers are required to provide security in order to satisfy Readiness Milestone 5 (M5) when the LGIA is executed as described in Section 14.4. The amount of security required for M5 is equal to nine (9) times the Interconnection Customer's share of the Definitive Interconnection Study Process study costs. If this amount is not known, the Transmission Provider shall use the Section 4.4.2 study deposit amount as an estimate of study cost until such amounts are known. If initially estimated, M5 shall be updated when the final invoice for actual study costs is issued. As this M5 amount is the total security required to satisfy Readiness Milestone 5, any security previously provided pursuant to Sections 10.11.1, 10.11.2, 10.11.3, 10.11.4, or 10.11.6 shall be applied towards the Readiness Milestone 5 amount when the LGIA is executed. The Interconnection Customer shall only be responsible to provide the incremental amount of security to the Transmission Provider and any excess security provided shall be refunded to the Interconnection Customer. Transmission Provider shall refund all security provided under this section to the Interconnection Customer upon achieving Commercial Operation.

10.11.6 Security Requirements.

A table showing the security required in each milestone is provided in Appendix 6-2. The security amount is dependent on if the Interconnection Customer provided a Readiness Milestone and the study phase the Interconnection Customer is entering. All security shall be in the form of (a) cash or (b) an irrevocable letter of credit in a form reasonably acceptable to Transmission Provider. If the Interconnection Customer withdraws prior to executing an

LGIA, the Transmission Provider shall be entitled to use the financial security as payment for (a) the final invoice for study costs and (b) the Withdrawal Penalty, after which any remaining amount of security shall be returned to Interconnection Customer. If the Interconnection Customer does not withdraw and executes an LGIA, the amount of security shall be increased or decreased as needed in order to reflect the cost estimate for Transmission Provider's Interconnection Facilities and Network Upgrades set forth in Appendix B to the LGIA. Once the LGIA is fully executed, the terms of the LGIA shall govern such security.

Prior to the close of the Customer Engagement Window, all Interconnection Customers must provide initial security equal to the Section 4.1.2 study deposit amount as described in Section 10.1 and 10.8(a.). The security provided in Section 10.8(a.) will be applied towards the amount of security required for M5.

An Interconnection Customer may opt to provide security *in lieu* of providing Readiness Milestones 1 through 4, as described above in Sections 10.11.1, 10.11.2, 10.11.3, and 10.11.4. The security provided is applied towards the security amount required for each successive milestone if the Interconnection Customer does not withdraw from the Definitive Interconnection Study Process. For example, the security provided for M2 is applied to the amount of security required for M3. If an Interconnection Customer is initially required to provide increased security under this Section 10.11.6 because it cannot satisfy the requirements of a Readiness Milestone, but subsequently does satisfy those requirements prior to the next Readiness Milestone, its security should be reduced accordingly.

In lieu of providing a demonstration of readiness for Milestones 1 through 4, the amount of security required is a multiple of the study deposit described in Section 4.1.2 and is in addition to the initial security required for all Interconnection Customers under Section 10.1 and 10.8(a.). The additional amount of security required for each milestone for Interconnection Customers that do not provide a demonstration of readiness is:

M1 = 1 times the Section 4.1.2 study deposit amount
M2 = 2 times the Section 4.1.2 study deposit amount
M3 = 4 times the Section 4.1.2 study deposit amount
M4 = 6 times the Section 4.1.2 study deposit amount

For clarity, the total (i.e. inclusive of the security required under Section 10.8(a.) amount of security required for each milestone for Interconnection Customers that do not provide a demonstration of readiness is:

M1 = 2 times the Section 4.1.2 study deposit amount
M2 = 3 times the Section 4.1.2 study deposit amount
M3 = 5 times the Section 4.1.2 study deposit amount
M4 = 7 times the Section 4.1.2 study deposit amount

If the Interconnection Customer withdraws prior to executing an LGIA, the Transmission Provider shall be entitled to use the security as payment for (a) the final invoice for study costs and (b) the Withdrawal Penalty, after which any remaining amount of security shall be returned to Interconnection Customer. If the Interconnection Customer does not withdraw and executes an LGIA, the amount of financial security shall be increased or decreased as needed in order to reflect the cost estimate for Transmission Provider's Interconnection

Facilities and Network Upgrades set forth in Appendix B to the LGIA. Once the LGIA is fully executed, the terms of the LGIA shall govern such security.

Section 11. Interconnection Facilities Study.

11.1 Serial Interconnection Study Process – Interconnection Facilities Study Agreement. Simultaneously with the delivery of the Interconnection System Impact Study to Interconnection Customer, Transmission Provider shall provide to Interconnection Customer an Interconnection Facilities Study Agreement in the form of Appendix 7 to this LGIP. The Interconnection Facilities Study Agreement shall provide that Interconnection Customer shall compensate Transmission Provider for the actual cost of the Interconnection Facilities Study. Within three (3) Business Days following the Interconnection System Impact Study results meeting, Transmission Provider shall provide to Interconnection Customer a non-binding good faith estimate of the cost and timeframe for completing the Interconnection Facilities Study. Interconnection Customer shall execute the Interconnection Facilities Study Agreement and deliver the executed Interconnection Facilities Study Agreement to Transmission Provider within thirty (30) Calendar Days after its receipt, together with the required technical data and the greater of $100,000 or Interconnection Customer's portion of the estimated monthly cost of conducting the Interconnection Facilities Study.

11.1.1 Transmission Provider shall invoice Interconnection Customer on a monthly basis for the work to be conducted on the Interconnection Facilities Study each month. Interconnection Customer shall pay invoiced amounts within thirty (30) Calendar Days of receipt of invoice. Transmission Provider shall continue to hold the amounts on deposit until settlement of the final invoice.

11.2 Definitive Interconnection Study Process – Facilities Study Agreement. Simultaneously with the notice to Interconnection Customer(s) that Phase 3 is complete or not required, Transmission Provider shall provide to Interconnection Customer an Interconnection Facilities Study Agreement in the form of Appendix 7 to this LGIP. Within five (5) Business Days following the open DISIS results (Phase 2 or Phase 3) meeting, Transmission Provider shall provide to Interconnection Customer a non-binding good faith estimate of the cost and timeframe for completing the Interconnection Facilities Study. The Interconnection Facilities Study Agreement shall provide that Interconnection Customer shall compensate Transmission Provider for the actual cost of the Interconnection Facilities Study. Interconnection Customer shall execute the Interconnection Facilities Study Agreement and deliver the executed Interconnection Facilities Study Agreement to Transmission Provider, together with the required technical data, and Readiness Milestone 4 as described in Section 10.11.4. Interconnection Customers that do not provide the Readiness Milestone (or additional security *in lieu* of the Readiness Milestone) by the required date shall be deemed withdrawn from the Queue pursuant to Section 4.7.

11.3 Scope of Interconnection Facilities Study. The Interconnection Facilities Study shall specify and provide a non-binding estimate of the cost of the equipment, engineering, procurement and construction work needed to implement the conclusions of the final Phase 2 or Phase 3 Report (as appropriate) in the Definitive Interconnection Study Process and the System Impact Study in the Serial Interconnection Study Process in accordance with Good Utility Practice to physically and electrically connect the Interconnection Facilities to the Transmission System. The Interconnection Facilities

Study shall also identify the electrical switching configuration of the connection equipment, including, without limitation: the transformer, switchgear, meters, and other station equipment; the nature and estimated cost of any Transmission Provider's Interconnection Facilities and Network Upgrades necessary to accomplish the interconnection; and an estimate of the time required to complete the construction and installation of such facilities.

The Interconnection Facilities Study will also identify any potential control equipment for requests for Interconnection Service that are lower than the Generating Facility Capacity.

11.4 Interconnection Facilities Study Procedures.

a. Transmission Provider shall coordinate the Interconnection Facilities Study with any Affected System pursuant to Section 4.6 above. Transmission Provider shall utilize existing studies to the extent practicable in performing the Interconnection Facilities Study.

   Transmission Provider shall use Reasonable Efforts to complete the study and issue a draft Interconnection Facilities Study report to Interconnection Customer within ninety (90) Calendar Days where Transmission Provider is administering the Serial Interconnection Study Process, and within one hundred fifty (150) Calendar Days for all Interconnection Customers within the Cluster where the Transmission Provider is administering the Definitive Interconnection Study Process.

b. At the request of Interconnection Customer or at any time Transmission Provider determines that it will not meet the required time frame for completing the Interconnection Facilities Study, Transmission Provider shall notify Interconnection Customer as to the schedule status of the Interconnection Facilities Study. If Transmission Provider is unable to complete the Interconnection Facilities Study and issue a draft Interconnection Facilities Study report within the time required, it shall notify Interconnection Customer and provide an estimated completion date and an explanation of the reasons why additional time is required.

c. Interconnection Customer may, within thirty (30) Calendar Days after receipt of the draft Interconnection Facilities Study report, provide written comments to Transmission Provider, which Transmission Provider shall consider in completing the final Interconnection Facilities Study report. Transmission Provider shall issue the final Interconnection Facilities Study report within fifteen (15) Business Days of receiving Interconnection Customer's comments or promptly upon receiving Interconnection Customer's statement that it will not provide comments. Transmission Provider may reasonably extend such fifteen (15) Business Day period upon notice to Interconnection Customer if Interconnection Customer's comments require Transmission Provider to perform additional analyses or make other significant modifications prior to the issuance of the final Interconnection Facilities Study report. Upon request, Transmission Provider shall provide Interconnection Customer supporting documentation, workpapers, and databases or data developed in the preparation of the Interconnection Facilities Study, subject to confidentiality arrangements consistent with Section 16.1.

11.5 Meeting with Transmission Provider.

Within ten (10) Business Days of providing a draft Interconnection Facilities Study report to Interconnection Customer, Transmission Provider and Interconnection Customer shall meet to discuss the results of the Interconnection Facilities Study.

11.6 Serial Interconnection Study Process Facilities Study Re-Study.

If Re-Study of the Interconnection Facilities Study is required due to a higher or equal priority queued project dropping out of the Queue or a modification of a higher queued project pursuant to Section 5.4, Transmission Provider shall so notify Interconnection Customer in writing. The Transmission Provider shall make Reasonable Efforts to ensure such Re-Study shall take no longer than sixty (60) Calendar Days from the date of notice. Re-Studies that require rerunning the system impact study analysis make take longer than sixty days. Any cost of Re-Study shall be borne by the Interconnection Customer(s) being re-studied.

11.7 Definitive Interconnection Study Process Facilities Study Re-Study.

If Re-Study of the Interconnection Facilities Study is required due to a higher or equal priority queued project dropping out of the Queue or a modification of a higher queued project pursuant to Section 5.4, Transmission Provider shall so notify Interconnection Customer in writing. The Transmission Provider shall make Reasonable Efforts to ensure such Re-Study shall take no longer than sixty (60) Calendar Days from the date of notice, unless the Transmission Provider DISIS Phase 3 re-study is required. Re-Studies that require rerunning the DISIS analysis make take longer than sixty days. Any cost of Re-Study shall be borne by the Interconnection Customer(s) being re-studied pursuant to Section 10.3.

Section 12. Engineering & Procurement ("E&P") Agreement.

Prior to executing an LGIA, an Interconnection Customer may, in order to advance the implementation of its interconnection, request and Transmission Provider shall offer the Interconnection Customer, an E&P Agreement that authorizes Transmission Provider to begin engineering and procurement of long lead-time items necessary for the establishment of the interconnection. However, Transmission Provider shall not be obligated to offer an E&P Agreement if Interconnection Customer is in Dispute Resolution as a result of an allegation that Interconnection Customer has failed to meet any milestones in the Serial Interconnection Study Process, Readiness Milestones in the Definitive Interconnection Study Process, or comply with any prerequisites specified in other parts of the LGIP. The E&P Agreement is an optional procedure and it will not alter the Interconnection Customer's Queue Position or In-Service Date. The E&P Agreement shall provide for Interconnection Customer to pay the cost of all activities authorized by Interconnection Customer and to make advance payments or provide other satisfactory security for such costs.

Interconnection Customer shall pay the cost of such authorized activities and any cancellation costs for equipment that is already ordered for its interconnection, which cannot be mitigated as hereafter described, whether or not such items or equipment later become unnecessary. If Interconnection Customer withdraws its application for interconnection or either Party terminates the E&P Agreement, to the extent the equipment ordered can be canceled under reasonable terms, Interconnection Customer shall be obligated to pay the associated cancellation costs. To the extent that the equipment cannot be reasonably canceled, Transmission Provider may elect: (i) to take title to the equipment, in which event Transmission Provider shall refund Interconnection Customer any amounts paid by Interconnection Customer for such equipment and shall pay the cost of delivery of such equipment, or (ii) to transfer title to and deliver such equipment to Interconnection Customer,

in which event Interconnection Customer shall pay any unpaid balance and cost of delivery of such equipment.

Section 13. Serial Interconnection Study Process- Optional Interconnection Study.

13.1 Optional Interconnection Study Agreement.

On or after the date when Interconnection Customer receives Interconnection System Impact Study results, Interconnection Customer may request, and Transmission Provider shall perform a reasonable number of Optional Studies. The request shall describe the assumptions that Interconnection Customer wishes Transmission Provider to study within the scope described in Section 13.2. Within five (5) Business Days after receipt of a request for an Optional Interconnection Study, Transmission Provider shall provide to Interconnection Customer an Optional Interconnection Study Agreement in the form of Appendix 9.

The Optional Interconnection Study Agreement shall: (i) specify the technical data that Interconnection Customer must provide for each phase of the Optional Interconnection Study, (ii) specify Interconnection Customer's assumptions as to which Interconnection Requests with earlier queue priority dates will be excluded from the Optional Interconnection Study case and assumptions as to the type of interconnection service for Interconnection Requests remaining in the Optional Interconnection Study case, and (iii) Transmission Provider's estimate of the cost of the Optional Interconnection Study. To the extent known by Transmission Provider, such estimate shall include any costs expected to be incurred by any Affected System whose participation is necessary to complete the Optional Interconnection Study. Notwithstanding the above, Transmission Provider shall not be required as a result of an Optional Interconnection Study request to conduct any additional Interconnection Studies with respect to any other Interconnection Request.

Interconnection Customer shall execute the Optional Interconnection Study Agreement within ten (10) Business Days of receipt and deliver the Optional Interconnection Study Agreement, the technical data and a $10,000 deposit to Transmission Provider.

13.2 Scope of Optional Interconnection Study.

The Optional Interconnection Study will consist of a sensitivity analysis based on the assumptions specified by Interconnection Customer in the Optional Interconnection Study Agreement. The Optional Interconnection Study will also identify Transmission Provider's Interconnection Facilities and the Network Upgrades, and the estimated cost thereof, that may be required to provide transmission service or Interconnection Service based upon the results of the Optional Interconnection Study. The Optional Interconnection Study shall be performed solely for informational purposes. Transmission Provider shall use Reasonable Efforts to coordinate the study with any Affected Systems that may be affected by the types of Interconnection Services that are being studied. Transmission Provider shall utilize existing studies to the extent practicable in conducting the Optional Interconnection Study.

13.3 Optional Interconnection Study Procedures.

The executed Optional Interconnection Study Agreement, the prepayment, and technical and other data called for therein must be provided to Transmission Provider within ten (10) Business Days of Interconnection Customer receipt of the Optional Interconnection Study Agreement. Transmission Provider shall use Reasonable Efforts to complete the Optional Interconnection Study within a mutually agreed upon time period specified within the

Optional Interconnection Study Agreement. If Transmission Provider is unable to complete the Optional Interconnection Study within such time period, it shall notify Interconnection Customer and provide an estimated completion date and an explanation of the reasons why additional time is required. Any difference between the study payment and the actual cost of the study shall be paid to Transmission Provider or refunded to Interconnection Customer, as appropriate. Upon request, Transmission Provider shall provide Interconnection Customer supporting documentation and workpapers and databases or data developed in the preparation of the Optional Interconnection Study, subject to confidentiality arrangements consistent with Section 16.1.

Section 14. Standard Large Generator Interconnection Agreement (LGIA).

14.1 Tender.

Interconnection Customer shall tender comments on the draft Interconnection Facilities Study Report within thirty (30) Calendar Days of receipt of the report. Within thirty (30) Calendar Days after the comments are submitted or after the Interconnection Customer notifies Transmission Provider in writing that it will provide no comments, Transmission Provider shall tender a draft LGIA, together with draft appendices. The draft LGIA shall be in the form of Transmission Provider's FERC-approved standard form LGIA, which is in Appendix 10. Interconnection Customer shall return the completed draft appendices and execute the LGIA within thirty (30) Calendar Days unless the sixty (60) Calendar Day negotiation period under Section 14.2 has commenced.

14.2 Negotiation.

Notwithstanding Section 14.1, at the request of Interconnection Customer Transmission Provider shall begin negotiations with Interconnection Customer concerning the appendices to the LGIA at any time after Interconnection Customer executes the Interconnection Facilities Study Agreement. Transmission Provider and Interconnection Customer shall negotiate concerning any disputed provisions of the appendices to the draft LGIA for not more than sixty (60) Calendar Days after tender of the final Interconnection Facilities Study Report. If Interconnection Customer determines that negotiations are at an impasse, Interconnection Customer may request termination of the negotiations at any time after tender of the draft LGIA pursuant to Section 14.1 and request submission of the unexecuted LGIA with FERC or initiate Dispute Resolution procedures pursuant to Section 16.6. If Interconnection Customer requests termination of the negotiations, but within sixty (60) Calendar Days thereafter fails to request either the filing of the unexecuted LGIA or initiate Dispute Resolution, it shall be deemed to have withdrawn its Interconnection Request. Unless otherwise agreed by the Parties, if Interconnection Customer has not executed the LGIA, requested filing of an unexecuted LGIA, or initiated Dispute Resolution procedures pursuant to Section 16.6 within sixty (60) Calendar Days of tender of draft LGIA, it shall be deemed to have withdrawn its Interconnection Request. Transmission Provider shall provide to Interconnection Customer a final LGIA within fifteen (15) Business Days after the completion of the negotiation process.

14.3 Serial Interconnection Study Process – Execution and Filing.

Within fifteen (15) Business Days after receipt of the final LGIA, Interconnection Customer shall provide Transmission Provider (A) reasonable evidence that continued Site Control or (B) posting of $250,000, non-refundable additional security, which shall be applied toward future construction costs. At the same time, Interconnection Customer also shall provide

reasonable evidence that one or more of the following milestones in the development of the Large Generating Facility, at Interconnection Customer election, has been achieved: (i) the execution of a contract for the supply or transportation of fuel to the Large Generating Facility; (ii) the execution of a contract for the supply of cooling water to the Large Generating Facility; (iii) execution of a contract for the engineering for, procurement of major equipment for, or construction of, the Large Generating Facility; (iv) execution of a contract for the sale of electric energy or capacity from the Large Generating Facility; or (v) application for an air, water, or land use permit.

Interconnection Customer shall either: (i) execute two originals of the tendered LGIA and return them to Transmission Provider; or (ii) request in writing that Transmission Provider file with FERC an LGIA in unexecuted form. As soon as practicable, but not later than ten (10) Business Days after receiving either the two executed originals of the tendered LGIA (if it does not conform with a FERC-approved standard form of interconnection agreement) or the request to file an unexecuted LGIA, Transmission Provider shall file the LGIA with FERC, together with its explanation of any matters as to which Interconnection Customer and Transmission Provider disagree and support for the costs that Transmission Provider proposes to charge to Interconnection Customer under the LGIA. An unexecuted LGIA should contain terms and conditions deemed appropriate by Transmission Provider for the Interconnection Request. If the Parties agree to proceed with design, procurement, and construction of facilities and upgrades under the agreed-upon terms of the unexecuted LGIA, they may proceed pending FERC action.

14.4 Definitive Interconnection Study Process – Execution and Filing.

Within fifteen (15) Business Days after receipt of the final LGIA, Interconnection Customer shall (a) provide reasonable evidence that continued Site Control exists as defined in Section 1 and (b) post Readiness Milestone 5 (security equal to nine (9) times that Interconnection Customer's share of the Definitive Interconnection Study Process study costs as described in Section 10.11.5). If the actual study costs are not known at the time, study costs shall be estimated as the study deposit described in Section 4.1.2, and the M5 amount shall be updated when the study costs are known. If the Interconnection Customer does not reach Commercial Operation, upon payment of any final invoice, including any Withdrawal Penalty, Readiness Milestone 5 shall be refunded to the Interconnection Customer, including any accumulated interest, if applicable. If the Interconnection Customer reaches Commercial Operation, Readiness Milestone 5 is refunded to the Interconnection Customer including any accumulated interest, if applicable. Within fifteen (15) Business Days after receipt of the final LGIA, Interconnection Customer also shall provide reasonable evidence that one or more of the following milestones in the development of the Large Generating Facility, at Interconnection Customer election, has been achieved: (i) the execution of a contract for the supply or transportation of fuel to the Large Generating Facility (not applicable for wind or solar resources); (ii) the execution of a contract for the supply of cooling water to the Large Generating Facility (not applicable for wind or solar resources); (iii) execution of a contract for the engineering for, procurement of major equipment for, or construction of, the Large Generating Facility; (iv) execution of a contract (or comparable evidence) for the sale of electric energy or capacity from the Large Generating Facility; or (v) application(s) for applicable air, water, or land use permit(s).

Interconnection Customer shall either: (i) execute two originals of the tendered LGIA and return them to Transmission Provider; or (ii) request in writing that Transmission Provider file with FERC an LGIA in unexecuted form. As soon as practicable, but not later than ten

(10) Business Days after receiving either the two executed originals of the tendered LGIA (if it does not conform with a FERC-approved standard form of interconnection agreement) or the request to file an unexecuted LGIA, Transmission Provider shall file the LGIA with FERC, together with its explanation of any matters as to which Interconnection Customer and Transmission Provider disagree and support for the costs that Transmission Provider proposes to charge to Interconnection Customer under the LGIA. An unexecuted LGIA should contain terms and conditions deemed appropriate by Transmission Provider for the Interconnection Request. If the Parties agree to proceed with design, procurement, and construction of facilities and upgrades under the agreed-upon terms of the unexecuted LGIA, they may proceed pending FERC action.

14.5 Commencement of Interconnection Activities.

If Interconnection Customer executes the final LGIA, Transmission Provider and Interconnection Customer shall perform their respective obligations in accordance with the terms of the LGIA, subject to modification by FERC. Upon submission of an unexecuted LGIA, Interconnection Customer and Transmission Provider shall promptly comply with the unexecuted LGIA, subject to modification by FERC.

Section 15. Construction of Transmission Provider's Interconnection Facilities and Network Upgrades.

15.1 Schedule.

Transmission Provider and Interconnection Customer shall negotiate in good faith concerning a schedule for the construction of Transmission Provider's Interconnection Facilities and the Network Upgrades.

15.2 Construction Sequencing.

15.2.1 General.

In general, the In-Service Date of an Interconnection Customers seeking interconnection to the Transmission System will determine the sequence of construction of Network Upgrades. Construction Sequencing may also apply to shared Transmission Provider's Interconnection Facilities in a similar manner as described below for Network Upgrades.

15.2.2 Advance Construction of Network Upgrades That are an Obligation of an Entity Other Than Interconnection Customer.

An Interconnection Customer with an LGIA, in order to maintain its In-Service Date, may request that Transmission Provider advance to the extent necessary the completion of Network Upgrades that: (i) were assumed in the Interconnection Studies for such Interconnection Customer, (ii) are necessary to support such In-Service Date, and (iii) would otherwise not be completed, pursuant to a contractual obligation of an entity other than Interconnection Customer that is seeking interconnection to the Transmission System, in time to support such In-Service Date. Upon such request, Transmission Provider will use Reasonable Efforts to advance the construction of such Network Upgrades to accommodate such request; provided that Interconnection Customer commits to pay Transmission Provider: (i)any associated expediting costs and (ii) the cost of such Network Upgrades.

Transmission Provider will refund to Interconnection Customer both the expediting costs and the cost of Network Upgrades, in accordance with Article 11.4 of the LGIA. Consequently,

the entity with a contractual obligation to construct such Network Upgrades shall be obligated to pay only that portion of the costs of the Network Upgrades that Transmission Provider has not refunded to Interconnection Customer. Payment by that entity shall be due on the date that it would have been due had there been no request for advance construction. Transmission Provider shall forward to Interconnection Customer the amount paid by the entity with a contractual obligation to construct the Network Upgrades as payment in full for the outstanding balance owed to Interconnection Customer. Transmission Provider then shall refund to that entity the amount that it paid for the Network Upgrades, in accordance with Article 11.4 of the LGIA.

15.2.3 Advancing Construction of Network Upgrades That are Part of an Expansion Plan of the Transmission Provider.

An Interconnection Customer with an LGIA, in order to maintain its In-Service Date, may request that Transmission Provider advance to the extent necessary the completion of Network Upgrades that: (i) are necessary to support such In-Service Date and (ii) would otherwise not be completed, pursuant to an expansion plan of Transmission Provider, in time to support such In-Service Date. Upon such request, Transmission Provider will use Reasonable Efforts to advance the construction of such Network Upgrades to accommodate such request; provided that Interconnection Customer commits to pay Transmission Provider any associated expediting costs. Interconnection Customer shall be entitled to transmission credits, if any, for any expediting costs paid.

15.2.4 Amended Interconnection System Impact Study.

An Interconnection System Impact Study will be amended to determine the facilities necessary to support the requested In-Service Date. This amended study will include those transmission and Large Generating Facilities that are expected to be in service on or before the requested In-Service Date.

Section 16. Miscellaneous.

16.1 Confidentiality.

Confidential Information shall include, without limitation, all information relating to a Party's technology, research and development, business affairs, and pricing, and any information supplied by either of the Parties to the other prior to the execution of an LGIA.

Information is Confidential Information only if it is clearly designated or marked in writing as confidential on the face of the document, or, if the information is conveyed orally or by inspection, if the Party providing the information orally informs the Party receiving the information that the information is confidential.

If requested by either Party, the other Party shall provide in writing, the basis for asserting that the information referred to in this Article warrants confidential treatment, and the requesting Party may disclose such writing to the appropriate Governmental Authority. Each Party shall be responsible for the costs associated with affording confidential treatment to its information.

16.1.1 Scope.

Confidential Information shall not include information that the receiving Party can demonstrate: (1) is generally available to the public other than as a result of a disclosure by

the receiving Party; (2) was in the lawful possession of the receiving Party on a non-confidential basis before receiving it from the disclosing Party; (3) was supplied to the receiving Party without restriction by a third party, who, to the knowledge of the receiving Party after due inquiry, was under no obligation to the disclosing Party to keep such information confidential; (4) was independently developed by the receiving Party without reference to Confidential Information of the disclosing Party; (5) is, or becomes, publicly known, through no wrongful act or omission of the receiving Party or Breach of the LGIA; or (6) is required, in accordance with Section 16.1.6, Order of Disclosure, to be disclosed by any Governmental Authority or is otherwise required to be disclosed by law or subpoena, or is necessary in any legal proceeding establishing rights and obligations under the LGIA.

Information designated as Confidential Information will no longer be deemed confidential if the Party that designated the information as confidential notifies the other Party that it no longer is confidential.

16.1.2 Release of Confidential Information.

Neither Party shall release or disclose Confidential Information to any other person, except to its Affiliates (limited by the Standards of Conduct requirements), employees, consultants, or to parties who may be or considering providing financing to or equity participation with Interconnection Customer, or to potential purchasers or assignees of Interconnection Customer, on a need-to-know basis in connection with these procedures, unless such person has first been advised of the confidentiality provisions of this Section 16.1 and has agreed to comply with such provisions. Notwithstanding the foregoing, a Party providing Confidential Information to any person shall remain primarily responsible for any release of Confidential Information in contravention of this Section 16.1.

16.1.3 Rights.

Each Party retains all rights, title, and interest in the Confidential Information that each Party discloses to the other Party. The disclosure by each Party to the other Party of Confidential Information shall not be deemed a waiver by either Party or any other person or entity of the right to protect the Confidential Information from public disclosure.

16.1.4 No Warranties.

By providing Confidential Information, neither Party makes any warranties or representations as to its accuracy or completeness. In addition, by supplying Confidential Information, neither Party obligates itself to provide any particular information or Confidential Information to the other Party nor to enter into any further agreements or proceed with any other relationship or joint venture.

16.1.5 Standard of Care.

Each Party shall use at least the same standard of care to protect Confidential Information it receives as it uses to protect its own Confidential Information from unauthorized disclosure, publication or dissemination. Each Party may use Confidential Information solely to fulfill its obligations to the other Party under these procedures or its regulatory requirements.

16.1.6 Order of Disclosure.

If a court or a Government Authority or entity with the right, power, and apparent authority to do so requests or requires either Party, by subpoena, oral deposition, interrogatories, requests for production of documents, administrative order, or otherwise, to disclose

Confidential Information, that Party shall provide the other Party with prompt notice of such request(s) or requirement(s) so that the other Party may seek an appropriate protective order or waive compliance with the terms of the LGIA. Notwithstanding the absence of a protective order or waiver, the Party may disclose such Confidential Information which, in the opinion of its counsel, the Party is legally compelled to disclose. Each Party will use Reasonable Efforts to obtain reliable assurance that confidential treatment will be accorded any Confidential Information so furnished.

16.1.7 Remedies.

The Parties agree that monetary damages would be inadequate to compensate a Party for the other Party's Breach of its obligations under this Section 16.1. Each Party accordingly agrees that the other Party shall be entitled to equitable relief, by way of injunction or otherwise, if the first Party Breaches or threatens to Breach its obligations under this Section 16.1, which equitable relief shall be granted without bond or proof of damages, and the receiving Party shall not plead in defense that there would be an adequate remedy at law. Such remedy shall not be deemed an exclusive remedy for the Breach of this Section 16.1, but shall be in addition to all other remedies available at law or in equity. The Parties further acknowledge and agree that the covenants contained herein are necessary for the protection of legitimate business interests and are reasonable in scope. No Party, however, shall be liable for indirect, incidental, or consequential or punitive damages of any nature or kind resulting from or arising in connection with this Section 16.1.

16.1.8 Disclosure to FERC, its Staff, or a State.

Notwithstanding anything in this Section 16.1 to the contrary, and pursuant to 18 CFR section 1b.20, if FERC or its staff, during the course of an investigation or otherwise, requests information from one of the Parties that is otherwise required to be maintained in confidence pursuant to the LGIP, the Party shall provide the requested information to FERC or its staff, within the time provided for in the request for information. In providing the information to FERC or its staff, the Party must, consistent with 18 CFR section 388.112, request that the information be treated as confidential and non-public by FERC and its staff and that the information be withheld from public disclosure. Parties are prohibited from notifying the other Party prior to the release of the Confidential Information to FERC or its staff. The Party shall notify the other Party to the LGIA when it is notified by FERC or its staff that a request to release Confidential Information has been received by FERC, at which time either of the Parties may respond before such information would be made public, pursuant to 18 CFR section 388.112. Requests from a state regulatory body conducting a confidential investigation shall be treated in a similar manner, consistent with applicable state rules and regulations.

16.1.9 Subject to the exception in Section 16.1.8, any information that a Party claims is competitively sensitive, commercial or financial information ("Confidential Information") shall not be disclosed by the other Party to any person not employed or retained by the other Party, except to the extent disclosure is (i) required by law; (ii) reasonably deemed by the disclosing Party to be required to be disclosed in connection with a dispute between or among the Parties, or the defense of litigation or dispute; (iii) otherwise permitted by consent of the other Party, such consent not to be unreasonably withheld; or (iv) necessary to fulfill its obligations under this LGIP or as a transmission service provider or a Control Area operator including disclosing the Confidential Information to an RTO or ISO or to a subregional, regional or national reliability organization or planning group. The Party asserting confidentiality shall notify the other Party in writing of the information it claims is

confidential. Prior to any disclosures of the other Party's Confidential Information under this subparagraph, or if any third party or Governmental Authority makes any request or demand for any of the information described in this subparagraph, the disclosing Party agrees to promptly notify the other Party in writing and agrees to assert confidentiality and cooperate with the other Party in seeking to protect the Confidential Information from public disclosure by confidentiality agreement, protective order or other reasonable measures.

16.1.10 This provision shall not apply to any information that was or is hereafter in the public domain (except as a result of a Breach of this provision).

16.1.11 Transmission Provider shall, at Interconnection Customer's election, destroy, in a confidential manner, or return the Confidential Information provided at the time of Confidential Information is no longer needed.

16.2 Delegation of Responsibility.

Transmission Provider may use the services of subcontractors as it deems appropriate to perform its obligations under this LGIP. Transmission Provider shall remain primarily liable to Interconnection Customer for the performance of such subcontractors and compliance with its obligations of this LGIP. The subcontractor shall keep all information provided confidential and shall use such information solely for the performance of such obligation for which it was provided and no other purpose.

16.3 Serial Interconnection Study Process – Obligation for Study Costs.

Transmission Provider shall charge and Interconnection Customer shall pay the actual costs of the Interconnection Studies. Any difference between the study deposit and the actual cost of the applicable Interconnection Study shall be paid by or refunded, except as otherwise provided herein, to Interconnection Customer or offset against the cost of any future Interconnection Studies associated with the applicable Interconnection Request prior to beginning of any such future Interconnection Studies. Any invoices for Interconnection Studies shall include a detailed and itemized accounting of the cost of each Interconnection Study. Interconnection Customer shall pay any such undisputed costs within thirty (30) Calendar Days of receipt of an invoice therefor. Transmission Provider shall not be obligated to perform or continue to perform any studies unless Interconnection Customer has paid all undisputed amounts in compliance herewith.

16.4 Definitive Interconnection Study Process – Obligation for Study Costs and Withdrawal Penalty.

Transmission Provider shall charge and Interconnection Customer shall pay the actual costs of the Interconnection Studies and the Withdrawal Penalty, as applicable. Any difference between the study deposit and the actual cost of the applicable Interconnection Study shall be paid by or refunded, except as otherwise provided herein. Any invoices for Interconnection Studies shall include a detailed and itemized accounting of the cost of each Interconnection Study as well as the Withdrawal Penalty, if applicable. Interconnection Customer shall pay any such undisputed costs within thirty (30) Calendar Days of receipt of an invoice. Transmission Provider shall not be obligated to perform or continue to perform any studies unless Interconnection Customer has paid all undisputed amounts in compliance herewith. If invoices are not paid within thirty (30) Calendar Days of receipt of an invoice, Transmission Provider shall draw upon the security provided under this LGIP to settle all accounts, which shall include any offsets of amounts due and owing by Transmission Provider. After the final

invoice is paid and all accounts are settled, Transmission Provider shall refund all remaining security.

16.5 Third Parties Conducting Studies.

If (i) at the time of the signing of an Interconnection Study Agreement there is disagreement as to the estimated time to complete an Interconnection Study, (ii) Interconnection Customer receives notice pursuant to Sections 3.3, 7.1, 7.2, 8.3, 9.4, 10.8, 11.4, or 13.3 that Transmission Provider will not complete an Interconnection Study within the applicable timeframe for such Interconnection Study, or (iii) Interconnection Customer receives neither the Interconnection Study nor a notice under Sections 3.3, 7.1, 7.2, 8.3, 9.4, 10.8, 11.4, or 13.3 within the applicable timeframe for such Interconnection Study, then Interconnection Customer may require Transmission Provider to utilize a third party consultant reasonably acceptable to Interconnection Customer and Transmission Provider to perform such Interconnection Study under the direction of Transmission Provider. At other times, Transmission Provider may also utilize a third party consultant to perform such Interconnection Study, either in response to a general request of Interconnection Customer, or on its own volition.

In all cases, use of a third party consultant shall be in accord with Article 26 of the LGIA (Subcontractors) and limited to situations where Transmission Provider determines that doing so will help maintain or accelerate the study process for Interconnection Customer's pending Interconnection Request and not interfere with Transmission Provider's progress on Interconnection Studies for other pending Interconnection Requests. In cases where Interconnection Customer requests use of a third party consultant to perform such Interconnection Study, Interconnection Customer and Transmission Provider shall negotiate all of the pertinent terms and conditions, including reimbursement arrangements and the estimated study completion date and study review deadline. Transmission Provider shall convey all workpapers, data bases, study results and all other supporting documentation prepared to date with respect to the Interconnection Request as soon as soon as practicable upon Interconnection Customer's request subject to the confidentiality provision in Section 16.1. In any case, such third party contract may be entered into with either Interconnection Customer or Transmission Provider at Transmission Provider's discretion. In the case of (iii) Interconnection Customer maintains its right to submit a claim to Dispute Resolution to recover the costs of such third party study. Such third party consultant shall be required to comply with this LGIP, Article 26 of the LGIA (Subcontractors), and the relevant Tariff procedures and protocols as would apply if Transmission Provider were to conduct the Interconnection Study and shall use the information provided to it solely for purposes of performing such services and for no other purposes. Transmission Provider shall cooperate with such third party consultant and Interconnection Customer to complete and issue the Interconnection Study in the shortest reasonable time.

16.6 Disputes.

16.6.1 Submission.

In the event either Party has a dispute, or asserts a claim, that arises out of or in connection with the LGIA, the LGIP, or their performance, such Party (the "disputing Party") shall provide the other Party with written notice of the dispute or claim ("Notice of Dispute"). Such dispute or claim shall be referred to a designated senior representative of each Party for resolution on an informal basis as promptly as practicable after receipt of the Notice of Dispute by the other Party. In the event the designated representatives are unable to resolve

the claim or dispute through unassisted or assisted negotiations within thirty (30) Calendar Days of the other Party's receipt of the Notice of Dispute, such claim or dispute may, upon mutual agreement of the Parties, be submitted to arbitration and resolved in accordance with the arbitration procedures set forth below. In the event the Parties do not agree to submit such claim or dispute to arbitration, each Party may exercise whatever rights and remedies it may have in equity or at law consistent with the terms of this LGIA. Where the Transmission Provider is administering a Definitive Interconnection Study Process as prescribed in Section 10 and an Interconnection Customer initiates a dispute pursuant to this Section, the disputing Interconnection Customer shall have the option to either withdraw from the Cluster and be studied as part of the next Cluster or to continue being evaluated as part of the Cluster provided that it complies with all Readiness Milestones and other requirements of the Section 10 Definitive Interconnection System Impact Study.

16.6.2 External Arbitration Procedures.

Any arbitration initiated under these procedures shall be conducted before a single neutral arbitrator appointed by the Parties. If the Parties fail to agree upon a single arbitrator within ten (10) Calendar Days of the submission of the dispute to arbitration, each Party shall choose one arbitrator who shall sit on a three-member arbitration panel. The two arbitrators so chosen shall within twenty (20) Calendar Days select a third arbitrator to chair the arbitration panel. In either case, the arbitrators shall be knowledgeable in electric utility matters, including electric transmission and bulk power issues, and shall not have any current or past substantial business or financial relationships with any party to the arbitration (except prior arbitration). The arbitrator(s) shall provide each of the Parties an opportunity to be heard and, except as otherwise provided herein, shall conduct the arbitration in accordance with the Commercial Arbitration Rules of the American Arbitration Association ("Arbitration Rules") and any applicable FERC regulations or RTO rules; provided, however, in the event of a conflict between the Arbitration Rules and the terms of this Section 16, the terms of this Section 16 shall prevail.

16.6.3 Arbitration Decisions.

Unless otherwise agreed by the Parties, the arbitrator(s) shall render a decision within ninety (90) Calendar Days of appointment and shall notify the Parties in writing of such decision and the reasons therefor. The arbitrator(s) shall be authorized only to interpret and apply the provisions of the LGIA and LGIP and shall have no power to modify or change any provision of the LGIA and LGIP in any manner. The decision of the arbitrator(s) shall be final and binding upon the Parties, and judgment on the award may be entered in any court having jurisdiction. The decision of the arbitrator(s) may be appealed solely on the grounds that the conduct of the arbitrator(s), or the decision itself, violated the standards set forth in the Federal Arbitration Act or the Administrative Dispute Resolution Act. The final decision of the arbitrator must also be filed with FERC if it affects jurisdictional rates, terms and conditions of service, Interconnection Facilities, or Network Upgrades.

16.6.4 Costs.

Each Party shall be responsible for its own costs incurred during the arbitration process and for the following costs, if applicable: (1) the cost of the arbitrator chosen by the Party to sit on the three member panel and one half of the cost of the third arbitrator chosen; or (2) one half the cost of the single arbitrator jointly chosen by the Parties.

16.6.5 Non-binding dispute resolution procedures. If a Party has submitted a Notice of Dispute pursuant to Section 16.6.1, and the Parties are unable to resolve the claim or dispute through

unassisted or assisted negotiations within the thirty (30) Calendar Days provided in that section, and the Parties cannot reach mutual agreement to pursue the Section 16.6.2 arbitration process, a Party may request that Transmission Provider engage in Nonbinding Dispute Resolution pursuant to this section by providing written notice to Transmission Provider ("Request for Non-binding Dispute Resolution"). Conversely, either Party may file a Request for Non-binding Dispute Resolution pursuant to this section without first seeking mutual agreement to pursue the Section 16.6.2 arbitration process. The process in Section 16.6.5 shall serve as an alternative to, and not a replacement of, the Section 16.6.2 arbitration process. Pursuant to this process, a transmission provider must within 30 days of receipt of the Request for Non-binding Dispute Resolution appoint a neutral decision-maker that is an independent subcontractor that shall not have any current or past substantial business or financial relationships with either Party. Unless otherwise agreed by the Parties, the decision-maker shall render a decision within sixty (60) Calendar Days of appointment and shall notify the Parties in writing of such decision and reasons therefore. This decision-maker shall be authorized only to interpret and apply the provisions of the LGIP and LGIA and shall have no power to modify or change any provision of the LGIP and LGIA in any manner. The result reached in this process is not binding, but, unless otherwise agreed, the Parties may cite the record and decision in the non-binding dispute resolution process in future dispute resolution processes, including in a Section 16.6.2 arbitration, or in a Federal Power Act section 206 complaint. Each Party shall be responsible for its own costs incurred during the process and the cost of the decision-maker shall be divided equally among each Party to the dispute.

16.7 Local Furnishing Bonds.

16.7.1 Transmission Providers That Own Facilities Financed by Local Furnishing Bonds.
This provision is applicable only to a Transmission Provider that has financed facilities for the local furnishing of electric energy with tax-exempt bonds, as described in Section 142(f) of the Internal Revenue Code ("local furnishing bonds"). Notwithstanding any other provision of this LGIA and LGIP, Transmission Provider shall not be required to provide Interconnection Service to Interconnection Customer pursuant to this LGIA and LGIP if the provision of such Transmission Service would jeopardize the tax-exempt status of any local furnishing bond(s) used to finance Transmission Provider's facilities that would be used in providing such Interconnection Service.

16.7.2 Alternative Procedures for Requesting Interconnection Service.
If Transmission Provider determines that the provision of Interconnection Service requested by Interconnection Customer would jeopardize the tax-exempt status of any local furnishing bond(s) used to finance its facilities that would be used in providing such Interconnection Service, it shall advise the Interconnection Customer within thirty (30) Calendar Days of receipt of the Interconnection Request.

Interconnection Customer thereafter may renew its request for interconnection using the process specified in Article 5.2(ii) of the Transmission Provider's Tariff.

APPENDIX 1 to the LGIP
INFORMATIONAL INTERCONNECTION STUDY REQUEST
[Applicable to Section 3 Informational Interconnection Study Process, applicable only to Definitive Interconnection Study Process]

1. The undersigned Interconnection Customer submits this request to evaluate the interconnection of its Generating Facility with Transmission Provider's Transmission System pursuant to the Tariff.

2. The type of interconnection service to be evaluated (check one):
_____Energy Resource Interconnection Service
_____Network Resource Interconnection Service

3. Interconnection Customer provides the following information:

a. Address or location or the proposed new Large Generating Facility site (to the extent known) or, in the case of an existing Generating Facility, the name and specific location of the existing Generating Facility;

b. Maximum summer at ____ degrees C and winter at _____ degrees C megawatt electrical output of the proposed new Large Generating Facility or the amount of megawatt increase in the generating capacity of an existing Generating Facility;

c. General description of the equipment configuration;

d. Commercial Operation Date to be studied (Day, Month, and Year);

e. Name, address, telephone number, and e-mail address of Interconnection Customer's contact person;

f. Approximate location of the proposed Point of Interconnection;

g. Interconnection Customer Data (set forth in Attachment A)

h. Primary frequency response operating range for electric storage resources.

i. Requested capacity (in MW) of Interconnection Service (if lower than the Generating Facility Capacity); and

j. A Scope of Work including any additional information that may be reasonably required.

4. $10,000 study deposit amount as specified in the LGIP.

5. For study purposes, the point of delivery to deliver within the Control Area or to adjoining Control Area if the Generating Facility is not designated a Network Resource pursuant to Section 30.2 of the Tariff.

6. This Informational Interconnection Study Request shall be submitted to the representative indicated below:

[To be completed by Transmission Provider]

7. Representative of Interconnection Customer to contact:

[To be completed by Interconnection Customer]

8. This Interconnection Request is submitted by:

Name of Interconnection Customer: _____

By (signature): _____

Name (type or print): _____

Title: _____

Date: _____

ATTACHMENT A TO APPENDIX 1
Informational Interconnection Study Request

LARGE GENERATING FACILITY DATA

UNIT RATINGS

kVA _____ **°F _____** **Voltage _____**
Power Factor _____
Speed (RPM) _____ **Connection (e.g. Wye) _____**
Short Circuit Ratio _____ **Frequency, Hertz _____**
Stator Amperes at Rated kVA **_____** **Field Volts _____**
Max Turbine MW _____ **°F _____**

Primary frequency response operating range for electric storage resources.

Minimum State of Charge: _____

Maximum State of Charge: _____

COMBINED TURBINE-GENERATOR-EXCITER INERTIA DATA

Inertia Constant, H =_____kW sec/kVA
Moment-of-Inertia, WR2 =_____lb. ft.2

REACTANCE DATA (PER UNIT-RATED KVA)

DIRECT AXIS QUADRATURE AXIS

Synchronous – saturated	Xdv__	Xqv___
Synchronous – unsaturated	Xdi___	Xqi____
Transient – saturated	X'dv__	X'qv___
Transient – unsaturated	X'di___	X'qi____
Subtransient – saturated	X”dv__	X”qv_____
Subtransient – unsaturated	X”di___	X”qi___
Negative Sequence – saturated	X2v___	
Negative Sequence – unsaturated	X2i____	
Zero Sequence – saturated	X0v___	
Zero Sequence – unsaturated	X0i___	
Leakage Reactance	Xlm___	
Open Circuit	T'do___	T'qo___
Three-Phase Short Circuit Transient	T'd3_____	T'q____
Line to Line Short Circuit Transient	T'd1___	
Short Circuit Subtransient	T”d____	T”q____
Open Circuit Subtransient	T'd2____	
Line to Neutral Short Circuit Transient	T”do___	T”qo___

FIELD TIME CONSTANT DATA (SEC)
ARMATURE TIME CONSTANT DATA (SEC)

Three Phase Short Circuit	Ta3_____
Line to Line Short Circuit	Ta2_____
Line to Neutral Short Circuit	Ta1_____

NOTE: If requested information is not applicable, indicate by marking "N/A."

MW CAPABILITY AND PLANT CONFIGURATION
LARGE GENERATING FACILITY DATA

ARMATURE WINDING RESISTANCE DATA (PER UNIT)

Positive	R1_____
Negative	R2_____
Zero	R0_____

Rotor Short Time Thermal Capacity I22t = _____
Field Current at Rated kVA, Armature Voltage and PF =_____amps
Field Current at Rated kVA and Armature Voltage, 0 PF =_____amps
Three Phase Armature Winding Capacitance =_____microfarad
Field Winding Resistance = _____ ohms _____°C
Armature Winding Resistance (Per Phase) =_____ ohms _____°C

CURVES

Provide Saturation, Vee, Reactive Capability, Capacity Temperature Correction curves. Designate normal and emergency Hydrogen Pressure operating range for multiple curves.

GENERATOR STEP-UP TRANSFORMER DATA RATINGS

Capacity Self-cooled/
Maximum Nameplate

_____/_____kVA

Voltage Ratio(Generator Side/System side/Tertiary)
_____/_____/_____kV

Winding Connections (Low V/High V/Tertiary V (Delta or Wye))
_____/_____/_____

Fixed Taps Available _____

Present Tap Setting _____

If more than one transformer stage is used to deliver the output from the proposed generator to the Transmission System, please provide the information above for each transformer or transformer type.

IMPEDANCE

Positive

Z1 (on self-cooled kVA rating) _____%_____X/R

Zero

Z0 (on self-cooled kVA rating) _____%_____X/R

EXCITATION SYSTEM DATA

Identify appropriate IEEE model block diagram of excitation system and power system stabilizer (PSS) for computer representation in power system stability simulations and the corresponding excitation system and PSS constants for use in the model.

GOVERNOR SYSTEM DATA

Identify appropriate IEEE model block diagram of governor system for computer representation in power system stability simulations and the corresponding governor system constants for use in the model.

WIND GENERATORS

Number of generators to be interconnected pursuant to this Interconnection Request: _____

Elevation: _____ Single Phase _____Three Phase _____

Inverter manufacturer, model name, number, and version:

_____

List of adjustable setpoints for the protective equipment or software:

_____

Note: A completed General Electric Company Power Systems Load Flow ("PSLF") data sheet or other compatible formats, such as IEEE and PTI power flow models, must be supplied with the Interconnection Request. If other data sheets are more appropriate to the proposed device, then they shall be provided and discussed at Scoping Meeting.

INDUCTION GENERATORS

(*) Field Volts: _____
(*) Field Amperes: _____
(*) Motoring Power (kW): _____
(*) Neutral Grounding Resistor (If Applicable: _____

(*) I22t or K (Heating Time Constant): _____
(*) Rotor Resistance: _____
(*) Stator Resistance: _____
(*) Stator Reactance: _____
(*) Rotor Reactance: _____
(*) Magnetizing Reactance: _____
(*) Short Circuit Reactance: _____
(*) Exciting Current: _____
(*) Temperature Rise: _____
(*) Frame Size: _____
(*) Design Letter: _____
(*) Reactive Power Required In Vars (No Load): _____
(*) Reactive Power Required In Vars (Full Load): _____
(*) Total Rotating Inertia, H: _____Per Unit on KVA Base

Note: Please consult Transmission Provider prior to submitting the Informational Interconnection Study Request to determine if the information designated by (*) is required.

APPENDIX 2 to the LGIP
INFORMATIONAL INTERCONNECTION STUDY AGREEMENT
[Applicable to Section 3 Informational Interconnection Study Process, applicable only to Definitive Interconnection Study Process]

THIS AGREEMENT is made and entered into this___day of _____, 20___ by and between_____, a _____ organized and existing under the laws of the State of_____, ("Interconnection Customer,") and _____a _____existing under the laws of the State of _____, ("Transmission Provider"). Interconnection Customer and Transmission Provider each may be referred to as a "Party," or collectively as the "Parties."

RECITALS

WHEREAS, Interconnection Customer is evaluating developing a Generating Facility or generating capacity addition to an existing Generating Facility; and

WHEREAS, Interconnection Customer is proposing to evaluate an interconnection with the Transmission System; and

WHEREAS, Interconnection Customer has submitted to Transmission Provider an Informational Interconnection Study Interconnection Request; and

NOW, THEREFORE, in consideration of and subject to the mutual covenants contained herein the Parties agree as follows:

1.0 When used in this Agreement, with initial capitalization, the terms specified shall have the meanings indicated in in Transmission Provider's FERC-approved LGIP.

2.0 Interconnection Customer elects and Transmission Provider shall cause an Informational Interconnection Study consistent with Section 3 of this LGIP to be performed in accordance with the Tariff.

3.0 The scope of the Informational Interconnection Study shall be subject to the assumptions set forth in Attachment A to this Agreement.

4.0 The Informational Interconnection Study shall be performed solely for informational purposes.

5.0 The Informational Interconnection Study report shall provide an analysis based on the assumptions specified by Interconnection Customer in Attachment A to this Agreement, as agreed to by the Transmission Provider. The Informational Interconnection Study shall preliminarily identify Transmission Provider's Interconnection Facilities and the Network Upgrades, and the estimated cost thereof that may be required to interconnect the proposed Generating Facility based upon the assumptions specified by Interconnection Customer in Attachment A.

6.0 Interconnection Customer shall provide a deposit of ten thousand dollars ($10,000.00) for the performance of the Informational Interconnection Study. Transmission Provider's good faith estimate for the time of completion of the Informational Interconnection Study is [insert date].

Upon receipt of the Informational Interconnection Study, Transmission Provider shall charge and Interconnection Customer shall pay the actual costs of the Informational Interconnection Study.

Any difference between the initial deposit and the actual cost of the study shall be paid by or refunded to Interconnection Customer, as appropriate.

7.0 Miscellaneous. The Informational Interconnection Study Agreement shall include standard miscellaneous terms including, but not limited to, indemnities, representations, disclaimers, warranties, governing law, amendment, execution, waiver, enforceability and assignment, that reflect best practices in the electric industry, and that are consistent with regional practices, Applicable Laws and Regulations, and the organizational nature of each Party. All of these provisions, to the extent practicable, shall be consistent with the provisions of the LGIP and the LGIA.

IN WITNESS WHEREOF, the Parties have caused this Agreement to be duly executed by their duly authorized officers or agents on the day and year first above written.

[Insert name of Transmission Provider]

By: _____
Title: _____
Date: _____

[Insert name of Interconnection Customer]

By: _____
Title: _____
Date: _____

ATTACHMENT A
Informational Interconnection Study Agreement

ASSUMPTIONS USED IN CONDUCTING THE INFORMATIONAL STUDY

[Assumptions to be completed by Interconnection Customer and Transmission Provider]

APPENDIX 3 to the LGIP
INTERCONNECTION REQUEST FOR A
LARGE GENERATING FACILITY

1. The undersigned Interconnection Customer submits this request to interconnect its Large Generating Facility with Transmission Provider's Transmission System pursuant to a Tariff.

2. This Interconnection Request is for (check one):
   _____ A proposed new Large Generating Facility.
   _____ An increase in the generating capacity or a Material Modification of an existing Generating Facility.
   ____ A Generating Facility proposed for inclusion in a Resource Solicitation Process.
   _____ Provisional Interconnection Service related to an existing Interconnection Request or Interconnection Agreement. Existing Interconnection Queue Number associated with Provisional Interconnection Service Request is _____
   _____ Surplus Interconnection Service related to an existing Large Generator Interconnection Agreement (LGIA). Existing LGIA Customer offering Surplus Interconnection Service

   _____

   Surplus Interconnection Customer

   _____

   Existing Large Generating Facility Location and Related Point of Interconnection where Surplus Interconnection Service is offered

   _____

   _____

   For Surplus Interconnection Service, also include (1) proof that Existing LGIA Customer and Surplus Interconnection Customer have entered into a Surplus arrangement and (2) the System Impact Study performed for the Existing Generating Facility with its application or indicate that such study is not available.

3. The type of interconnection service requested (check one):
   _____ Energy Resource Interconnection Service
   _____ Network Resource Interconnection Service

4. _____ Check here only if Interconnection Customer requesting Network Resource Interconnection Service also seeks to have its Generating Facility studied for Energy Resource Interconnection Service (For Serial Interconnection Study Process Only)

5. Interconnection Customer provides the following information for a proposed new Large Generating Facility, an increase to generating capacity or a Material Modification of an existing Generating Facility, or for Provisional Service related to an existing Interconnection Request or Interconnection Agreement. For

Surplus Interconnection Service, the applicant provides the following information for the Surplus Generator that plans to utilize the Surplus Interconnection Service offered at the existing Large Generator Interconnection Customer's Point of Interconnection.

a. Address or location or the proposed new Large Generating Facility site (to the extent known) or, in the case of an existing Generating Facility, the name and specific location of the existing Generating Facility;

b. Maximum summer at ____ degrees C and winter at _____ degrees C megawatt electrical output of the proposed new Large Generating Facility or the amount of megawatt increase in the generating capacity of an existing Generating Facility;

c. General description of the equipment configuration;

d. Commercial Operation Date (Day, Month, and Year);

e. Name, address, telephone number, and e-mail address of Interconnection Customer's contact person;

f. Approximate location of the proposed Point of Interconnection (optional);

g. Interconnection Customer Data (set forth in Attachment A, Attachment B, and Attachment C)

h. Primary frequency response operating range for electric storage resources.

i. Requested capacity (in MW) of Interconnection Service (if lower than the Generating Facility Capacity).

6. Interconnection Customer provides applicable study deposit amount as specified in the LGIP.

For the Serial Interconnection Study Process, an Interconnection Customer shall submit a refundable deposit of $10,000.

For the Definitive Interconnection Study Process, an Interconnection Customer shall submit an application fee of $5,000 and the applicable deposit amount listed below:

$20,000 plus one dollar ($1.00) per kWac for requests < 20 MW requesting NRIS, or

$35,000 plus one dollar ($1.00) per kWac for requests ≥ 20 MW < 50 MW, or

50,000 plus one dollar ($1.00) per kWac for requests ≥ 50 MW < 80MW, or

$150,000 for requests ≥ 80 MW < 200 MW; or

$250,000 for requests ≥ 200 MW.

7. For the Definitive Interconnection Study Process, Interconnection Customer shall also be responsible for providing (1) one times (1x) the applicable study deposit amount and (2) either (a.)

achieving Readiness Milestone 1 (M1) or (b.) providing additional security prior to the close of the Customer Engagement Window as specified in Sections 10.1, 10.8(a.), and 10.11.6 of the LGIP.

8. If requesting NRIS: Interconnection Customer provides the expected point of delivery to deliver within the Transmission Provider's Control Area or to an adjoining Control Area if the Generating Facility is not designated a Network Resource pursuant to Section 30.2 of the Tariff.

9. Interconnection Customer provides Evidence of Site Control as specified in the LGIP and Transmission Provider's business practices posted on OASIS or a deposit *in lieu* of Site Control as described in Section 4.4.1 or 4.4.2 of the LGIP.

10. Evidence of Site Control as specified in the LGIP (check one)
    - ____ Is attached to this Interconnection Request
    - ____ Will be provided at a later date prior to commencement of the Serial System Impact Study or Phase I of the Definitive Interconnection System Impact Study in accordance with this LGIP
    - ____ Interconnection Customer may provide a deposit equal to $20,000 plus $500/MW in lieu of Site Control to enter Phase 1 of the Definitive Interconnection Study Process. A deposit in lieu of Site Control is not accepted for later Phases of the study process.

11. This Interconnection Request shall be submitted to the representative indicated below:

    [To be completed by Transmission Provider]

12. Representative of Interconnection Customer to contact:

    [To be completed by Interconnection Customer]

13. This Interconnection Request is submitted by:

    Name of Interconnection Customer: _____

    By (signature): _____

    Name (type or print): _____

    Title: _____

    Date: _____

ATTACHMENT A TO APPENDIX 3
INTERCONNECTION REQUEST

SITE CONTROL AND ADEQUACY

Total acres required to construct the Generating Facility: _____

Total acres under Site Control for the Generating Facility at the time of application: _____

Is Site Control required for Interconnection Facilities, i.e. transmission gen-tie or substation, to interconnect the Generating Facility? ___ Y ___ N

If yes, how many miles of gen-tie right-of-way are required? _____
What is the total number of acres required to build the gen-tie? _____
How many miles of gen-tie right-of-way are under Site Control at the time of this application? _____

List any local, state, or federal government permits required to construct the Generating Facility and any applicable Interconnection Facilities, i.e. transmission gen-tie:

_____
_____

ATTACHMENT B TO APPENDIX 3
INTERCONNECTION REQUEST

LARGE GENERATING FACILITY DATA (Synchronous)
See Attachment C for Inverter-Based Resources

UNIT RATINGS

kVA _____ °F _____ Voltage _____
Power Factor _____
Speed (RPM) _____ Connection (e.g. Wye) _____
Short Circuit Ratio _____ Frequency, Hertz _____
Stator Amperes at Rated kVA _____ Field Volts _____
Max Turbine MW _____ °F _____

Primary frequency response operating range for electric storage resources:

Minimum State of Charge:_____
Maximum State of Charge:_____

COMBINED TURBINE-GENERATOR-EXCITER INERTIA DATA

Inertia Constant, H = _____ kW sec/kVA
Moment-of-Inertia, WR^2 = _____ lb. $ft.^2$

REACTANCE DATA (PER UNIT-RATED KVA)

		DIRECT AXIS		**QUADRATURE AXIS**	
Synchronous – saturated	X_{dv}	_____	X_{qv}	_____
Synchronous – unsaturated	X_{di}	_____	X_{qi}	_____
Transient – saturated	X'_{dv}	_____	X'_{qv}	_____
Transient – unsaturated	X'_{di}	_____	X'_{qi}	_____
Subtransient – saturated	X''_{dv}	_____	X''_{qv}	_____
Subtransient – unsaturated	X''_{di}	_____	X''_{qi}	_____
Negative Sequence – saturated	$X2_v$	_____		
Negative Sequence – unsaturated	$X2_i$	_____		
Zero Sequence – saturated	$X0_v$	_____		
Zero Sequence – unsaturated	$X0_i$	_____		
Leakage Reactance	Xl_m	_____		

FIELD TIME CONSTANT DATA (SEC)

Open Circuit	T'_{do}	_____	T'_{qo}	_____
Three-Phase Short Circuit Transient	T'_{d3}	_____	T'_{q}	_____
Line to Line Short Circuit Transient	T'_{d2}	_____		
Line to Neutral Short Circuit Transient	T'_{d1}	_____		
Short Circuit Subtransient	T''''_{d}	_____	T''''_{q}	_____
Open Circuit Subtransient	T''''_{do}	_____	T''''_{qo}	_____

TIME CONSTANT DATA (SEC)

Three Phase Short Circuit	T_{a3}	_____
Line to Line Short Circuit	T_{a2}	_____
Line to Neutral Short Circuit	T_{a1}	_____

NOTE: If requested information is not applicable, indicate by marking "N/A."

MW CAPABILITY AND PLANT CONFIGURATION
LARGE GENERATING FACILITY DATA

ARMATURE WINDING RESISTANCE DATA (PER UNIT)

Positive	R_1	_____
Negative	R_2	_____
Zero	R_0	_____

Rotor Short Time Thermal Capacity I_2^2t = _____
Field Current at Rated kVA, Armature Voltage and PF = _____ amps
Field Current at Rated kVA and Armature Voltage, 0 PF = _____ amps
Three Phase Armature Winding Capacitance = _____ microfarad
Field Winding Resistance = _____ ohms _____ °C
Armature Winding Resistance (Per Phase) = _____ ohms _____ °C

CURVES

Provide Saturation, Vee, Reactive Capability, Capacity Temperature Correction curves. Designate normal and emergency Hydrogen Pressure operating range for multiple curves.

GENERATOR STEP-UP TRANSFORMER DATA RATINGS

Capacity (Self-cooled/Maximum Nameplate)
_____/_____kVA

Voltage Rating(High V/ Low V/ Tertiary V)
_____/_____/_____kV

Winding Connections (High V/ Low V/ Tertiary V (Delta or Wye))
_____/_____/_____

De-energized Taps Available _____

Present or Planned Tap Setting _____

Transformer Impedance

Positive Z_1 (on self-cooled kVA rating)_____ % _____ X/R

Zero Z_0 (on self-cooled kVA rating)_____ % _____ X/R

If more than one transformer stage is used to deliver the output from the proposed Generating Facility to the Transmission System, please provide the information above for each transformer

EXCITATION SYSTEM DATA

Identify appropriate IEEE model block diagram of excitation system and power system stabilizer (PSS) for computer representation in power system stability simulations and the corresponding excitation system and PSS constants for use in the model.

GOVERNOR SYSTEM DATA

Identify appropriate IEEE model block diagram of governor system for computer representation in power system stability simulations and the corresponding governor system constants for use in the model.

INDUCTION GENERATORS

(*) Field Volts: _____
(*) Field Amperes: _____
(*) Motoring Power (kW): _____
(*) Neutral Grounding Resistor (If Applicable): _____
(*) I_2^2t or K (Heating Time Constant): _____
(*) Rotor Resistance: _____
(*) Stator Resistance: _____
(*) Stator Reactance: _____
(*) Rotor Reactance: _____
(*) Magnetizing Reactance: _____
(*) Short Circuit Reactance: _____
(*) Exciting Current: _____
(*) Temperature Rise: _____
(*) Frame Size: _____
(*) Design Letter: _____
(*) Reactive Power Required In Vars (No Load): _____
(*) Reactive Power Required In Vars (Full Load): _____
(*) Total Rotating Inertia, H: _____Per Unit on KVA Base

Note: Please consult Transmission Provider prior to submitting the Interconnection Request to determine if the information designated by (*) is required.

ATTACHMENT C TO APPENDIX 3
INTERCONNECTION REQUEST

LARGE GENERATING FACILITY DATA (INVERTER-BASED RESOURCES)

1. **Requested Net MW Injection at the POI:** _____ MW

   Gross Inverter Nameplate Capability: _____ MVA (total of all inverters)
   Station Service Load: _____ MW ____ Mvar

   Additional Information for Storage (For DC-connected batteries, include the following data on the solar inverter data sheet. For AC-connected batteries, complete a separate data sheet.)
   MW Rating of Storage: _____ MW for Time: _____ Hours
   Gross Energy Rating: _____ MW-HR
   Maximum State of Charge: _____ pu
   Minimum State of Charge: _____ pu

2. **Simplified One-Line Diagram.** This should be similar to the Figure below. If different, mark the differences on the diagram below or provide a new diagram.

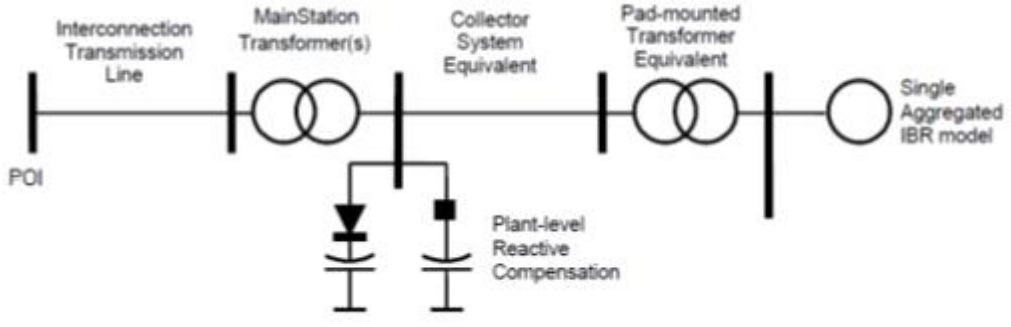

3. **Interconnection Tie Line.**
   a) Point of Interconnection (substation or line name): _____
   b) Line voltage: _____ kV, line rating at ___°F ambient: _____ MVA, line length: _____ Miles/Feet
   c) R_1 = _____ ohm or _____ pu on 100 MVA and line kV base (positive sequence)
   d) X_1 = _____ ohm or _____ pu on 100 MVA and line kV base (positive sequence)
   e) B_1 = _____ μF or _____ pu on 100 MVA and line kV base (positive sequence)
   f) R_0 = _____ ohm or _____ pu on 100 MVA and line kV base (zero sequence)
   g) X_0 = _____ ohm or _____ pu on 100 MVA and line kV base (zero sequence)

h) B_0 = _____ μF or _____ pu on 100 MVA and line kV base (zero sequence)

4. **Main Transformer.** Number of main transformers: _____

Two-Winding Main Transformer Data (as applicable):

a) Rating (ONAN/ONAF/ONAF): _____ / _____ / _____ MVA

b) Nominal Voltage for each winding (High/Low): _____ / _____ kV

c) Winding Connections (High/Low): [Delta or Wye] / [Delta or Wye]

d) Available tap positions: _____ / _____ / _____ / _____ / _____ kV **or** _____ % _____ # of taps.

e) Positive sequence impedance Z_1: _____ %, _____ X/R on self-cooled (ONAN) MVA rating above.

f) Zero sequence impedance Z_0: _____ %, _____ X/R on self-cooled (ONAN) MVA rating above.

g) For pad-mounted transformer, construction: 3 / 4 / 5 -legged

Three-Winding Main Transformer Data (as applicable)

h) Connection and winding (please attach diagram and mark to reference this form).

	H Winding Data	**X Winding Data**	**Y Winding Data**
Full load ratings (i.e. ONAN/ONAF/ONAF)	_____/_____/_____ MVA	_____/_____/_____ MVA	_____/_____/_____ MVA
Rated voltage base	_____ kV Delta or Wye connected	_____ kV Delta or Wye connected	_____ kV Delta or Wye connected
Tap positions available	_____/ _____/ _____/ _____/ _____ kV	_____/ _____/ _____/ _____/ _____ kV	_____/ _____/ _____/ _____/ _____ kV
Present Tap Setting (if applicable)	_____ kV	_____ kV	_____ kV
Neutral solidly grounded? (or) Neutral Grounding Resistor (if applicable)	_____ _____ Ohms	_____ _____ Ohms	_____ _____ Ohms
BIL rating	_____ kV	_____ kV	_____ kV

Three-Winding Main Transformer Impedance Data (as applicable)

	H-X Winding Data	**H-Y Winding Data**	**X-Y Winding Data**
Transformer base for impedances provided	_____ MVA	_____ MVA	_____ MVA
Positive sequence impedance Z_1	_____ % _____ X/R	_____ % _____ X/R	_____ % _____ X/R
Zero sequence impedance Z_0	_____ % _____ X/R	_____ % _____ X/R	_____ % _____ X/R

5. **Collector System Equivalent Model**. (Calculated as per "WECC Guide for Representation of Photovoltaic Systems in Large-Scale Load Flow Simulations", January 2011)
   a) Collector system one-line diagram attached: _____
   b) Collector system voltage = _____ kV
   c) Collector system equivalent impedance:
      i) R_1 = _____ ohm or _____ pu on 100 MVA and collector kV base (positive sequence)
      ii) X_1 = _____ ohm or _____ pu on 100 MVA and collector kV base (positive sequence)
      iii) C_1 = _____ μF or B_1 = _____ pu on 100 MVA and collector kV base (positive sequence)
      iv) R_0 = _____ ohm or _____ pu on 100 MVA and collector kV base (zero sequence)
      v) X_0 = _____ ohm or _____ pu on 100 MVA and collector kV base (zero sequence)
      vi) C_0 = _____ μF or B_0 = _____ pu on 100 MVA and collector kV base (zero sequence)

6. Must include spreadsheet of individual, detailed cable impedances _____**Inverter Step-Up Transformers.**
   a) Number of inverter step-up transformers: _____ Rating: _____/_____/_____ MVA

   Two-Winding Inverter Step-Up Transformer Data (as applicable):
   b) Nominal Voltage for each winding (High/Low): _____ / _____ kV
   c) Winding Connections: High: Delta or Wye / Low: Delta or Wye
   d) Available taps: _____ / _____ / _____ / _____ / _____ kV **or** _____ % _____ # of taps.
   e) Positive sequence impedance (Z_1) _____ %, _____ X/R on MVA rating above.
   f) Zero sequence impedance (Z_0) _____ %, _____ X/R on MVA rating above.

Three-Winding Inverter Step-Up Transformer Data (as applicable)

g) Connection and winding (attach diagram and mark to reference this form).

	H Winding Data	**X Winding Data**	**Y Winding Data**
Full load ratings (i.e. ONAN/ONAF/ONAF)	_____/_____/_____ MVA	_____/_____/_____ MVA	_____/_____/_____ MVA
Rated voltage base	_____ kV Delta or Wye connected	_____ kV Delta or Wye connected	_____ kV Delta or Wye connected
Tap positions available	_____/ _____/ _____/ _____/ _____ kV	_____/ _____/ _____/ _____/ _____ kV	_____/ _____/ _____/ _____/ _____ kV
Present Tap Setting (if applicable)	_____ kV	_____ kV	_____ kV
Neutral solidly grounded? (or) Neutral Grounding Resistor (if applicable)	_____ _____ Ohms	_____ _____ Ohms	_____ _____ Ohms
BIL rating	_____ kV	_____ kV	_____ kV

Three-Winding Inverter Step-Up Transformer Impedance Data (as applicable)

	H-X Winding Data	**H-Y Winding Data**	**X-Y Winding Data**
Transformer base for impedances provided	_____ MVA	_____ MVA	_____ MVA
Positive sequence impedance Z_1	_____ % _____ X/R	_____ % _____ X/R	_____ % _____ X/R
Zero sequence impedance Z_0	_____ % _____ X/R	_____ % _____ X/R	_____ % _____ X/R

7. **Inverter and IBR Data.**

a) Number of Inverters: _____

b) Inverter Capability at _____°F: _____ kW/ _____ kVA

c) Inverter Temperature Derating Curve attached: ____

d) Power Factor: Leading Lagging

e) IBR kW vs kvar capability curve attached: _____at ____°F

f) Inverter Manufacturer and Model #: _____

g) IBR Module (e.g. solar panel or battery) Manufacturer and Model #: _____

h) Provide with this form appropriate dynamic models for the IBR. Including a power plant control model that provides volt/var control and active power/frequency control functions, in a Siemens/PTI PSS/E format. Provide BOTH user-written models AND generic (recommended REGCAU1, REECAU1, REECC1, and REPCAU1 or similar as requested by Transmission Owner-TO) models. The user-written models shall include the model characteristics, block diagrams, values and names for all model parameters and a list of all state variables. All of the associated files for dynamic modeling should be in PSS/E version 33 and 34 formats. The generic models will be shared in the interconnection-wide based cases.[1] Check here to indicate all required files are attached: _____

8. **Plant Reactive Power Compensation** (beyond the inverters' built-in reactive capability)**.**

a) Type of reactive compensation device(s): _____

b) Individual fixed shunt reactive device type: _____

- Number and size of each: _____×_____ MVA

c) Dynamic reactive control device (e.g., SVC, STATCOM): _____

d) Control range: _____ Mvar (lead) to _____ Mvar (lag)

e) Control mode (e.g., voltage, power factor, reactive power): _____

f) Regulation point: _____

g) Describe the overall reactive power control strategy: _____

h) Provide with this form the dynamic modeling data in a Siemens/PTI PSS/E standard model. If a user-written model is submitted in place of a generic model, it must include the model characteristics, including block diagrams, values and names for all model parameters, and a list of all state variables. All of the associated files for dynamic modeling should be in the PSS/E version requested by TO and must be shareable on an interconnection-wide basis to support use in the interconnection-wide cases.[2] Check here to indicate all required files are attached: _____

9. **Short Circuit Contribution of the Facility at the Point of Interconnection.**

a) Maximum Three Phase Fault Current: _____ Amps and Duration: _____

b) Maximum Single Line to Ground Fault* Current: _____ Amps and Duration: _____

Model and parameter data required for short-circuit analysis is specific to each PV inverter make and model. All data to be provided in per-unit ohms, on the equivalent inverter MVA base.

[1] As required by NERC Reliability Standard MOD-32-1.
[2] As required by NERC Reliability Standard MOD-32-1.

- Inverter Equivalent MVA Base: _____ MVA
- Short-Circuit Equivalent Pos. Seq. Resistance (R1), valid for initial 4 to 6 cycles: _____ pu.
- Short-Circuit Equivalent Pos. Seq. Reactance (XL1), valid for initial 4 to 6 cycles: _____ pu.
- Short-Circuit Equivalent Neg. Seq. Resistance (R2), valid for initial 4 to 6 cycles: _____ pu.
- Short-Circuit Equivalent Neg. Seq. Reactance (XL2), valid for initial 4 to 6 cycles: _____ pu.
- Short-Circuit Equivalent Zero Seq. Resistance (R0), valid for initial 4 to 6 cycles: _____ pu.
- Short-Circuit Equivalent Zero Seq. Reactance (XL0), valid for initial 4 to 6 cycles: _____ pu.
- Special notes regarding short-circuit modeling assumptions:
  _____
  _____
  _____
  _____
  _____
  _____
  _____

  * Single Line to Ground Fault at the Point of Interconnection with ties to utility at the POI open.

APPENDIX 4 TO LGIP
INTERCONNECTION FEASIBILITY STUDY AGREEMENT
[Applicable to Section 8 Serial Interconnection Feasibility Study Process]

THIS AGREEMENT is made and entered into this___day of _____, 20___ by and between_____, a _____ organized and existing under the laws of the State of _____, ("Interconnection Customer,") and _____, a existing under the laws of the State of _____, ("Transmission Provider "). Interconnection Customer and Transmission Provider each may be referred to as a "Party," or collectively as the "Parties."

RECITALS

WHEREAS, Interconnection Customer is proposing to develop a Large Generating Facility or generating capacity addition to an existing Generating Facility consistent with the Interconnection Request submitted by Interconnection Customer dated _____ ; and

WHEREAS, Interconnection Customer desires to interconnect the Large Generating Facility with the Transmission System; and

WHEREAS, Interconnection Customer has requested Transmission Provider to perform an Interconnection Feasibility Study to assess the feasibility of interconnecting the proposed Large Generating Facility to the Transmission System, and of any Affected Systems;

NOW, THEREFORE, in consideration of and subject to the mutual covenants contained herein the Parties agreed as follows:

1.0 When used in this Agreement, with initial capitalization, the terms specified shall have the meanings indicated in Transmission Provider's FERC-approved LGIP.

2.0 Interconnection Customer elects and Transmission Provider shall cause to be performed an Interconnection Feasibility Study consistent with Section 8 of this LGIP in accordance with the Tariff.

3.0 The scope of the Interconnection Feasibility Study shall be subject to the assumptions set forth in Attachment A to this Agreement.

4.0 The Interconnection Feasibility Study shall be based on the technical information provided by Interconnection Customer in the Interconnection Request, as may be modified as the result of the Scoping Meeting. Transmission Provider reserves the right to request additional technical information from Interconnection Customer as may reasonably become necessary consistent with Good Utility Practice during the course of the Interconnection Feasibility Study and as designated in accordance with Section 4.4.6 of the LGIP. If, after the designation of the Point of Interconnection pursuant to Section 4.4.6 of the LGIP, Interconnection Customer modifies its Interconnection Request pursuant to Section 5.4, the time to complete the Interconnection Feasibility Study may be extended.

5.0 The Interconnection Feasibility Study report shall provide the following information:

- preliminary identification of any circuit breaker short circuit capability limits exceeded as a result of the interconnection;

- preliminary identification of any thermal overload or voltage limit violations resulting from the interconnection; and

- preliminary description and non-bonding estimated cost of facilities required to interconnect the Large Generating Facility to the Transmission System and to address the identified short circuit and power flow issues.

6.0 Interconnection Customer shall provide a deposit of $10,000 for the performance of the Interconnection Feasibility Study.

Upon receipt of the Interconnection Feasibility Study Transmission Provider shall charge and Interconnection Customer shall pay the actual costs of the Interconnection Feasibility Study.

Any difference between the deposit and the actual cost of the study shall be paid by or refunded to Interconnection Customer, as appropriate.

7.0 Miscellaneous. The Interconnection Feasibility Study Agreement shall include standard miscellaneous terms including, but not limited to, indemnities, representations, disclaimers, warranties, governing law, amendment, execution, waiver, enforceability and assignment, that reflect best practices in the electric industry, and that are consistent with regional practices, Applicable Laws and Regulations, and the organizational nature of each Party. All of these provisions, to the extent practicable, shall be consistent with the provisions of the LGIP and the LGIA.

IN WITNESS WHEREOF, the Parties have caused this Agreement to be duly executed by their duly authorized officers or agents on the day and year first above written.

[Insert name of Transmission Provider or Transmission Owner, if applicable]

By: _____ By: _____

Title: _____ Title: _____

Date: _____ Date: _____

[Insert name of Interconnection Customer]

By: _____

Title: _____

Date: _____

Attachment A to Appendix 4
Interconnection Feasibility
Study Agreement

ASSUMPTIONS USED IN CONDUCTING THE INTERCONNECTION FEASIBILITY STUDY

The Interconnection Feasibility Study will be based upon the information set forth in the Interconnection Request and agreed upon in the Scoping Meeting held on _____:

Designation of Point of Interconnection and configuration to be studied.
Designation of alternative Point(s) of Interconnection and configuration.

[Above assumptions to be completed by Interconnection Customer and other assumptions to be provided by Interconnection Customer and Transmission Provider]

APPENDIX 5 TO LGIP
SERIAL INTERCONNECTION SYSTEM IMPACT STUDY AGREEMENT
[Applicable to Section 9 Serial Interconnection System Impact Study Process]

THIS AGREEMENT is made and entered into this___day of _____, 20___ by and between_____, a_____ organized and existing under the laws of the State of_____, ("Interconnection Customer,") and _____a existing under the laws of the State of _____, ("Transmission Provider "). Interconnection Customer and Transmission Provider each may be referred to as a "Party," or collectively as the "Parties."

RECITALS

WHEREAS, Interconnection Customer is proposing to develop a Large Generating Facility or generating capacity addition to an existing Generating Facility consistent with the Interconnection Request submitted by Interconnection Customer dated _____; and

WHEREAS, Interconnection Customer desires to interconnect the Large Generating Facility with the Transmission System;

WHEREAS, Transmission Provider has completed an Interconnection Feasibility Study (the "Feasibility Study") and provided the results of said study to Interconnection Customer (This recital to be omitted if Transmission Provider does not require the Interconnection Feasibility Study.); and

WHEREAS, Interconnection Customer has requested Transmission Provider to perform a Serial Interconnection System Impact Study to assess the impact of interconnecting the Large Generating Facility to the Transmission System, and of any Affected Systems;

NOW, THEREFORE, in consideration of and subject to the mutual covenants contained herein the Parties agreed as follows:

1.0 When used in this Agreement, with initial capitalization, the terms specified shall have the meanings indicated in Transmission Provider's FERC-approved LGIP.

2.0 Interconnection Customer elects and Transmission Provider shall cause to be performed a Serial Interconnection System Impact Study consistent with Section 9 of this LGIP in accordance with the Tariff.

3.0 The scope of the Serial Interconnection System Impact Study shall be subject to the assumptions set forth in Attachment A to this Agreement.

4.0 The Serial Interconnection System Impact Study will be based upon the results of the Interconnection Feasibility Study and the technical information provided by Interconnection Customer in the Interconnection Request, subject to any modifications in accordance with Section 5.4 of the LGIP. Transmission Provider reserves the right to request additional technical information from Interconnection Customer as may reasonably become necessary consistent with Good Utility Practice during the course of the Interconnection Customer

System Impact Study. If Interconnection Customer modifies its designated Point of Interconnection, Interconnection Request, or the technical information provided therein is modified, the time to complete the Interconnection System Impact Study may be extended.

5.0 The Serial Interconnection System Impact Study report shall provide the following information:

- identification of any circuit breaker short circuit capability limits exceeded as a result of the interconnection;

- identification of any thermal overload or voltage limit violations resulting from the interconnection;

- identification of any instability or inadequately damped response to system disturbances resulting from the interconnection and

- description and non-binding, good faith estimated cost of facilities required to interconnect the Large Generating Facility to the Transmission System and to address the identified short circuit, instability, and power flow issues.

6.0 Interconnection Customer shall provide a deposit of $50,000 for the performance of the Serial Interconnection System Impact Study. Transmission Provider's good faith estimate for the time of completion of the Interconnection System Impact Study is [insert date].

Upon receipt of the Serial Interconnection System Impact Study, Transmission Provider shall charge and Interconnection Customer shall pay the actual costs of the Interconnection System Impact Study.

Any difference between the deposit and the actual cost of the study shall be paid by or refunded to Interconnection Customer, as appropriate.

7.0 Miscellaneous. The Serial Interconnection System Impact Study Agreement shall include standard miscellaneous terms including, but not limited to, indemnities, representations, disclaimers, warranties, governing law, amendment, execution, waiver, enforceability and assignment, that reflect best practices in the electric industry, that are consistent with regional practices, Applicable Laws and Regulations and the organizational nature of each Party. All of these provisions, to the extent practicable, shall be consistent with the provisions of the LGIP and the LGIA.

IN WITNESS THEREOF, the Parties have caused this Agreement to be duly executed by their duly authorized officers or agents on the day and year first above written.

[Insert name of Transmission Provider or Transmission Owner, if applicable]

By:	_____	By:	_____
Title:	_____	Title:	_____
Date:	_____	Date:	_____

[Insert name of Interconnection Customer]

By: _____

Title: _____

Date: _____

ASSUMPTIONS USED IN CONDUCTING THE INTERCONNECTION SYSTEM IMPACT STUDY

The Serial Interconnection System Impact Study will be based upon the results of the Interconnection Feasibility Study, subject to any modifications in accordance with Section 5.4 of the LGIP, and the following assumptions:

Designation of Point of Interconnection and configuration to be studied.
Designation of alternative Point(s) of Interconnection and configuration.

[Above assumptions to be completed by Interconnection Customer and other assumptions to be provided by Interconnection Customer and Transmission Provider]

APPENDIX 6-1 TO LGIP – OVERVIEW & TIMELINE OF INITIATION OF A DISIS CLUSTER: THE DISIS REQUEST WINDOW, CUSTOMER ENGAGEMENT WINDOW, & DISIS PHASE 1

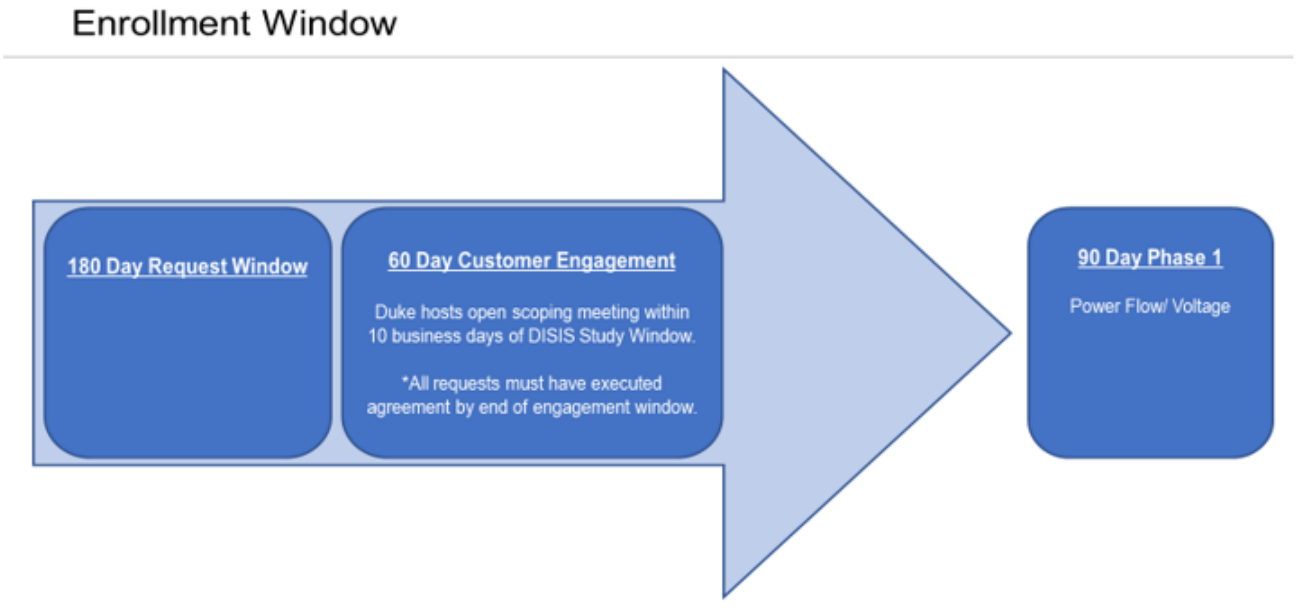

APPENDIX 6-2 TO LGIP – OVERVIEW AND TIMELINE OF DEFINITIVE INTERCONNECTION STUDY PROCESS, INCLUDING THE DISIS PROCESS

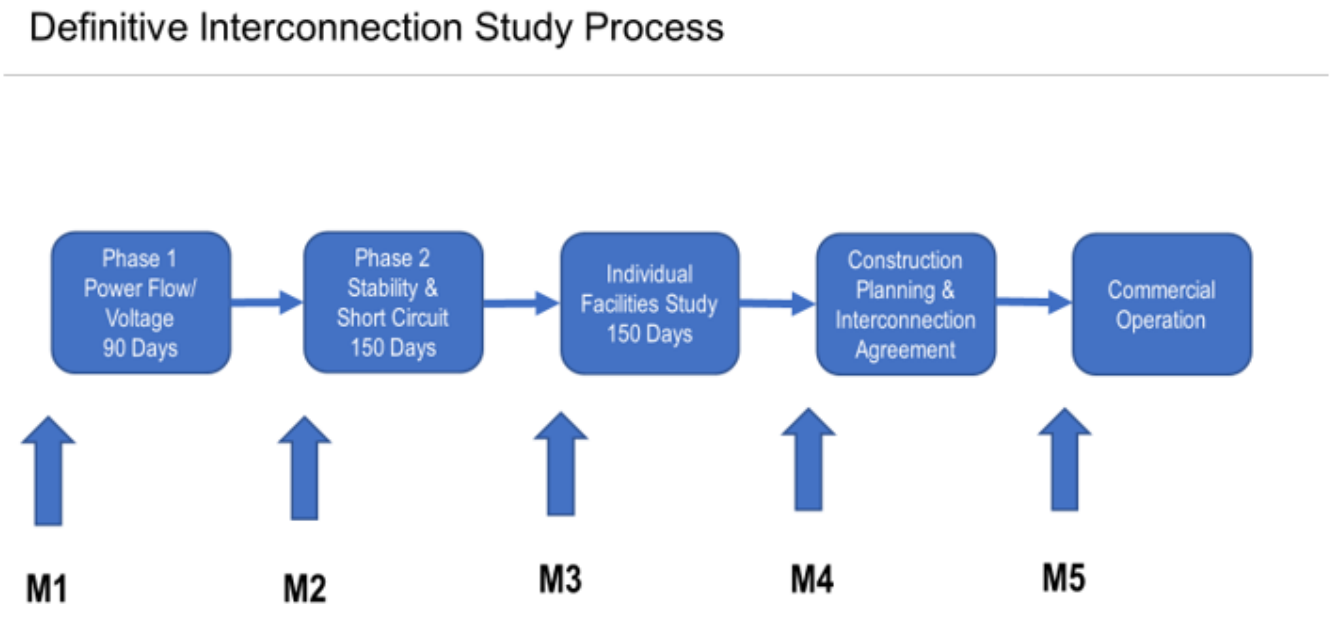

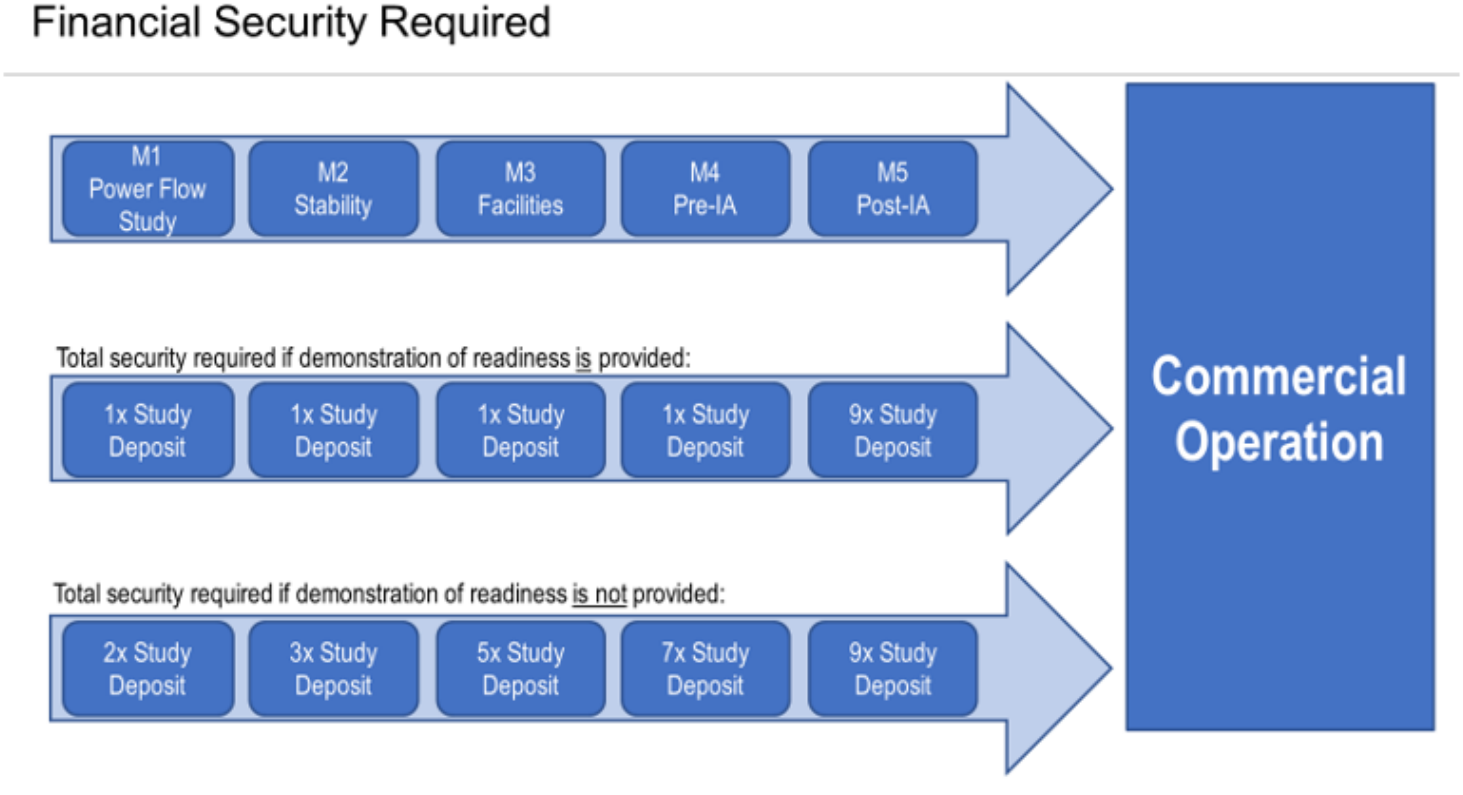

APPENDIX 6-3 TO LGIP
DEFINITIVE INTERCONNECTION SYSTEM IMPACT STUDY AGREEMENT
[Applicable to Section 10 Definitive Interconnection System Impact Study Process]

THIS AGREEMENT is made and entered into this_____ day of_____, 20___ by and between_____, a _____ organized and existing under the laws of the State of_____, ("Interconnection Customer,") and _____a _____existing under the laws of the State of _____, ("Transmission Provider"). Interconnection Customer and Transmission Provider each may be referred to as a "Party," or collectively as the "Parties."

RECITALS

WHEREAS, Interconnection Customer is proposing to develop a Large Generating Facility or generating capacity addition to an existing Generating Facility consistent with the Interconnection Request submitted by Interconnection Customer dated ; and

WHEREAS, Interconnection Customer desires to interconnect the Large Generating Facility with the Transmission System; and

WHEREAS, Interconnection Customer has requested Transmission Provider to perform a Definitive Interconnection System Impact Study to assess the impact of interconnecting the Large Generating Facility to the Transmission System, and of any Affected Systems; and

WHEREAS, Interconnection Customer commits to provide certain Readiness Milestones through the Definitive Interconnection Study process as described in Section 10.11 of the LGIP.

NOW, THEREFORE, in consideration of and subject to the mutual covenants contained herein the Parties agreed as follows:

1.0 When used in this Agreement, with initial capitalization, the terms specified shall have the meanings indicated in Transmission Provider's FERC-approved LGIP.

2.0 Interconnection Customer elects and Transmission Provider shall cause to be performed a Definitive Interconnection System Impact Study consistent with Sections 10.7 and 10.8 of this LGIP in accordance with the Tariff.

3.0 The scope of the Definitive Interconnection System Impact Study shall be subject to the assumptions set forth in Attachment A to this Agreement.

4.0 The Definitive Interconnection System Impact Study shall be based upon the technical information provided by Interconnection Customer in the Interconnection Request, subject to any modifications in accordance with Section 5.4 of the LGIP. Transmission Provider reserves the right to request additional technical information from Interconnection Customer as may reasonably become necessary consistent with Good Utility Practice during the course of the Definitive Interconnection System Impact Study. If Interconnection Customer modifies its designated Point of Interconnection, Interconnection Request, or the technical information provided therein is modified, the time to complete the Definitive Interconnection System Impact Study may be extended.

5.0 The Definitive Interconnection System Impact Study reports (Phase 1 Report or Phase 2 Report) shall provide the following information, as appropriate:

- identification of any circuit breaker short circuit capability limits exceeded as a result of the interconnection;

- identification of any thermal overload or voltage limit violations resulting from the interconnection;

- identification of any instability or inadequately damped response to system disturbances resulting from the interconnection; and

    - description and non-binding, good faith estimated cost of facilities required to interconnect the Large Generating Facility to the Transmission System and to address the identified short circuit, instability, and power flow issues.

6.0 Interconnection Customer shall comply with all Readiness Milestones and other requirements described in Section 10 of the LGIP for performance of the Definitive Interconnection System Impact Study. Interconnection Customer shall provide the deposit as specified in Section 4.1.2 of the LGIP for the performance of the Definitive Interconnection System Impact Study and the individual Interconnection Facilities Study as prescribed in Section 11. Transmission Provider's good faith estimate for the time of completion of the Definitive Interconnection System Impact Study (Phase 2) is [insert date].

Upon receipt of the Definitive Interconnection System Impact Study results or withdrawal of the Interconnection Request, Transmission Provider shall charge and Interconnection Customer shall pay the actual costs of the Definitive Interconnection System Impact Study, and the Withdrawal Penalty, as applicable, allocated according to Sections 4.7.1.1, 10.3, and the cost of the individual Interconnection Facilities Study as prescribed in Section 11.

Any difference between the study deposit and the actual cost of the study shall be paid by or refunded to Interconnection Customer, as appropriate, except as otherwise provided herein. As provided in Section 16.4 of the LGIP, Interconnection Customer has thirty (30) Calendar Days of receipt of an invoice from Transmission Provider to pay any undisputed costs. If invoices are not paid within thirty (30) Calendar Days of receipt of an invoice, Transmission Provider shall draw upon the security provided to settle all accounts, which shall include any offsets of amounts due and owing by Transmission Provider. After the final invoice is paid and all accounts are settled, Transmission Provider shall refund all remaining security.

7.0 Miscellaneous. The Definitive Interconnection System Impact Study Agreement shall include standard miscellaneous terms including, but not limited to, indemnities, representations, disclaimers, warranties, governing law, amendment, execution, waiver, enforceability and assignment, that reflect best practices in the electric industry, that are consistent with regional practices, Applicable Laws and Regulations and the organizational nature of each Party. All of these provisions, to the extent practicable, shall be consistent with the provisions of the LGIP and the LGIA.

IN WITNESS THEREOF, the Parties have caused this Agreement to be duly executed by their duly authorized officers or agents on the day and year first above written.

[Insert name of Transmission Provider or Transmission Owner, if applicable]

By: _____ By: _____

Title: _____ Title: _____

Date: _____ Date: _____

[Insert name of Interconnection Customer]

By: _____

Title: _____

Date: _____

ATTACHMENT A TO APPENDIX 6-3
DEFINITIVE INTERCONNECTION SYSTEM IMPACT STUDY AGREEMENT

ASSUMPTIONS USED IN CONDUCTING THE DEFINITIVE INTERCONNECTION SYSTEM IMPACT STUDY

The Definitive Interconnection System Impact Study shall be based upon the information set forth in the Interconnection Request(s) and results of applicable prior studies, subject to any modifications in accordance with Section 5.4 of the LGIP, and the following assumptions:

Designation of Point of Interconnection and configuration to be studied.

[Above assumptions to be completed by Interconnection Customer and other assumptions to be provided by Interconnection Customer and Transmission Provider]

APPENDIX 7 TO LGIP
INTERCONNECTION FACILITIES STUDY AGREEMENT
[Section 11 Facilities Study Process applicable to both Serial Interconnection Study Process and Definitive Interconnection Study Processes]

THIS AGREEMENT is made and entered into this___day of _____, 20___ by and between_____, a _____organized and existing under the laws of the State of _____, ("Interconnection Customer,") and _____, a existing under the laws of the State of _____, ("Transmission Provider "). Interconnection Customer and Transmission Provider each may be referred to as a "Party," or collectively as the "Parties."

RECITALS

WHEREAS, Interconnection Customer is proposing to develop a Large Generating Facility or generating capacity addition to an existing Generating Facility consistent with the Interconnection Request submitted by Interconnection Customer dated _____; and

WHEREAS, Interconnection Customer desires to interconnect the Large Generating Facility with the Transmission System;

WHEREAS, Transmission Provider has completed either the Serial Interconnection System Impact Study (the "System Impact Study") or the Definitive Interconnection System Impact Study and provided the results of said study to Interconnection Customer; and

WHEREAS, Interconnection Customer has requested Transmission Provider to perform an Interconnection Facilities Study to specify and estimate the cost of the equipment, engineering, procurement and construction work needed to implement the conclusions of either the Serial Interconnection System Impact Study or the Definitive Interconnection System Impact Study in accordance with Good Utility Practice to physically and electrically connect the Large Generating Facility to the Transmission System.

NOW, THEREFORE, in consideration of and subject to the mutual covenants contained herein the Parties agreed as follows:

1.0 When used in this Agreement, with initial capitalization, the terms specified shall have the meanings indicated in Transmission Provider's FERC-approved LGIP.

2.0 Interconnection Customer elects and Transmission Provider shall cause an Interconnection Facilities Study consistent with Section 11 of this LGIP to be performed in accordance with the Tariff.

3.0 The scope of the Interconnection Facilities Study shall be subject to the assumptions set forth in Attachment A and the data provided in Attachment B to this Agreement.

4.0 The Interconnection Facilities Study report (i) shall provide a description, estimated cost of (consistent with Attachment A), schedule for required facilities to interconnect the Large Generating Facility to the Transmission System and (ii) shall address the short circuit, instability, and power flow issues identified in either the Serial Interconnection System

Impact Study or the Definitive Interconnection System Impact Study completed by the Transmission Provider.

5.0 For the Serial Interconnection Study Process, the Interconnection Customer shall provide a deposit of $100,000 for the performance of the Interconnection Facilities Study. Transmission Provider shall invoice Interconnection Customer on a monthly basis for the work to be conducted on the Interconnection Facilities Study each month. Interconnection Customer shall pay invoiced amounts within thirty (30) Calendar Days of receipt of invoice. Transmission Provider shall continue to hold the amounts on deposit until settlement of the final invoice.

For the Definitive Interconnection Study Process, Interconnection Customer shall meet the requirements specified under Section 11.2 of the LGIP prior to the performance of the Interconnection Facilities Study.

6.0 The Transmission Provider shall use Reasonable Efforts to complete the study and issue a draft Interconnection Facilities Study report to Interconnection Customer within ninety (90) Calendar Days from receipt of executed Interconnection Facilities Study Agreement where Transmission Provider is administering a Serial Interconnection Study Process, or within one hundred fifty (150) Calendar Days where Transmission Provider is administering a Definitive Interconnection Study Process. .

7.0 This section only applies to the Definitive Interconnection Study Process. Interconnection Customer shall have provided the deposit as specified in Section 4.1.2 of the LGIP for the performance of the Definitive Interconnection System Impact Study and the Interconnection Facilities Study.

Upon receipt of the Interconnection Facilities Study results, Transmission Provider shall charge and Interconnection Customer shall pay the actual costs of the Definitive Interconnection System Impact Study which includes costs allocated according to Section 10.3 of the LGIP, the cost of the individual Interconnection Facilities Study, and the withdraw penalty calculated pursuant to Section 4.7.1.1, if applicable.

Any difference between the study deposit and the actual cost of the study shall be paid by or refunded to Interconnection Customer, as appropriate, except as otherwise provided herein. As provided in Section 16.3 of the LGIP, Interconnection Customer has thirty (30) Calendar Days of receipt of an invoice from Transmission Provider to pay any undisputed costs. If invoices are not paid within thirty (30) Calendar Days of receipt of an invoice, Transmission Provider shall draw upon the security provided to settle all accounts, which shall include any offsets of amounts due and owing by Transmission Provider. After the final invoice is paid and all accounts are settled, Transmission Provider shall refund all remaining security.

8.0 Miscellaneous. The Interconnection Facility Study Agreement shall include standard miscellaneous terms including, but not limited to, indemnities, representations, disclaimers, warranties, governing law, amendment, execution, waiver, enforceability and assignment, that reflect best practices in the electric industry, and that are consistent with regional practices, Applicable Laws and Regulations, and the organizational nature of each Party. All of these provisions, to the extent practicable, shall be consistent with the provisions of the LGIP and the LGIA.

IN WITNESS WHEREOF, the Parties have caused this Agreement to be duly executed by their duly authorized officers or agents on the day and year first above written.

[Insert name of Transmission Provider or Transmission Owner, if applicable]

By: _____ By: _____

Title: _____ Title: _____

Date: _____ Date: _____

[Insert name of Interconnection Customer]

By: _____

Title: _____

Date: _____

INTERCONNECTION CUSTOMER SCHEDULE ELECTION FOR CONDUCTING THE INTERCONNECTION FACILITIES STUDY
[Only applicable to Serial Interconnection Study Process]

Transmission Provider shall use Reasonable Efforts to complete the study and issue a draft Interconnection Facilities Study report to Interconnection Customer within the following number of days after of receipt of an executed copy of this Interconnection Facilities Study Agreement:

- ninety (90) Calendar Days with no more than a +/- 20 percent cost estimate contained in the report, or

- one hundred eighty (180) Calendar Days with no more than a +/- 10 percent cost estimate contained in the report.

Attachment B to Appendix 7
Interconnection Facilities
Study Agreement

DATA FORM TO BE PROVIDED BY INTERCONNECTION CUSTOMER WITH THE INTERCONNECTION FACILITIES STUDY AGREEMENT

Provide location plan and simplified one-line diagram of the plant and station facilities. For staged projects, please indicate future generation, transmission circuits, etc.

One set of metering is required for each generation connection to the new ring bus or existing Transmission Provider station. Number of generation connections:

On the one line diagram indicate the generation capacity attached at each metering location. (Maximum load on CT/PT)

On the one line diagram indicate the location of auxiliary power. (Minimum load on CT/PT) Amps

Will an alternate source of auxiliary power be available during CT/PT maintenance?
_____Yes _____ No

Will a transfer bus on the generation side of the metering require that each meter set be designed for the total plant generation? _____Yes _____No (Please indicate on one line diagram).

What type of control system or PLC will be located at Interconnection Customer's Large Generating Facility?

_____

What protocol does the control system or PLC use?

_____

Please provide a 7.5-minute quadrangle of the site. Sketch the plant, station, transmission line, and property line.

Physical dimensions of the proposed interconnection station:

_____

Bus length from generation to interconnection station:

_____

Line length from interconnection station to Transmission Provider's transmission line.

_____

Tower number observed in the field. (Painted on tower leg)* _____

Number of third party easements required for transmission lines*:

_____

* To be completed in coordination with Transmission Provider.

Is the Large Generating Facility in the Transmission Provider's service area?

_____Yes _____No Local provider: _____

Please provide proposed schedule dates:

Begin Construction	Date: _____
Generator step-up transformer receives back feed power	Date: _____
Generation Testing	Date: _____
Commercial Operation	Date: _____

APPENDIX 8-1 TO LGIP
Transitional Serial Interconnection Facilities Study Agreement
[Applicable to Section 7.1 Transitional Serial Process]

THIS AGREEMENT is made and entered into this_____ day of_____, 20___ by and between_____, a _____ organized and existing under the laws of the State of_____, ("Interconnection Customer,") and _____a _____existing under the laws of the State of _____, ("Transmission Provider"). Interconnection Customer and Transmission Provider each may be referred to as a "Party," or collectively as the "Parties."

RECITALS

WHEREAS, Interconnection Customer is proposing to develop a Large Generating Facility or generating capacity addition to an existing Generating Facility consistent with the Interconnection Request submitted by Interconnection Customer dated ; and

WHEREAS, Interconnection Customer desires to interconnect the Large Generating Facility with the Transmission System; and

WHEREAS, Interconnection Customer has requested Transmission Provider to continue processing its Interconnection Facilities Study to specify and estimate the cost of the equipment, engineering, procurement and construction work needed to implement the conclusions of the System Impact Study in accordance with Good Utility Practice to physically and electrically connect the Large Generating Facility to the Transmission System; and

WHEREAS, Transmission Provider has completed a System Impact Study and Interconnection Customer has executed and Transmission Provider has accepted an Interconnection Facilities Study Agreement; and

WHEREAS, Interconnection Customer has provided certain requirements described in Section 7.1 of the LGIP including a deposit on Transmission provider's Interconnection Facilities and Network Upgrades.

NOW, THEREFORE, in consideration of and subject to the mutual covenants contained herein the Parties agreed as follows:

1.0 When used in this Agreement, with initial capitalization, the terms specified shall have the meanings indicated in Transmission Provider's FERC-approved LGIP.

2.0 Interconnection Customer elects and Transmission Provider shall cause to be performed an Interconnection Facilities Study consistent with Sections 11 of this LGIP in accordance with the Tariff.

3.0 The scope of the Interconnection Facilities Study shall be subject to the assumptions set forth in Attachment A to this Agreement which shall be the same assumptions as the previous Interconnection Facilities Study Agreement.

4.0 The Interconnection Facilities Study report (i) shall provide a description, estimated cost of (consistent with Attachment A), schedule for required facilities to interconnect the Large Generating Facility to the Transmission System and (ii) shall address the short circuit,

instability, and power flow issues identified in the most recently published System Impact Study.

5.0 Interconnection Customer has met the requirements described in Section 7.1 of the LGIP. The time for completion of the Interconnection Facilities Study is specified in Attachment A.

6.0 Upon receipt of the Interconnection Facilities Study results, Transmission Provider shall charge and Interconnection Customer shall pay the actual costs of the Interconnection Facilities Study.

Any difference between the study deposit and the actual cost of the study shall be paid by or refunded to Interconnection Customer, as appropriate.

7.0 Miscellaneous. The Interconnection Facilities Study Agreement shall include standard miscellaneous terms including, but not limited to, indemnities, representations, disclaimers, warranties, governing law, amendment, execution, waiver, enforceability and assignment, that reflect best practices in the electric industry, and that are consistent with regional practices, Applicable Laws and Regulations, and the organizational nature of each Party. All of these provisions, to the extent practicable, shall be consistent with the provisions of the LGIP and the LGIA.

IN WITNESS WHEREOF, the Parties have caused this Agreement to be duly executed by their duly authorized officers or agents on the day and year first above written.

[Insert name of Transmission Provider or Transmission Owner, if applicable]
By: _____ By: _____

Title: _____ Title: _____
Date: _____ Date: _____

[Insert name of Interconnection Customer]
By: _____

Title: _____
Date: _____

ATTACHMENT A TO APPENDIX 8-1
TRANSITIONAL SERIAL INTERCONNECTION FACILITIES STUDY

ASSUMPTIONS USED IN CONDUCTING THE
TRANSITIONAL SERIAL INTERCONNECTION FACILITIES STUDY

[Assumptions to be completed by Interconnection Customer and Transmission Provider]

APPENDIX 8-2 to the LGIP
TRANSITIONAL CLUSTER STUDY AGREEMENT
[Applicable to Section 7.2 Transitional Cluster Process]

THIS AGREEMENT is made and entered into this_____ day of_____, 20___ by and between_____, a _____ organized and existing under the laws of the State of_____, ("Interconnection Customer,") and _____a _____existing under the laws of the State of _____, ("Transmission Provider"). Interconnection Customer and Transmission Provider each may be referred to as a "Party," or collectively as the "Parties."

RECITALS

WHEREAS, Interconnection Customer is proposing to develop a Large Generating Facility or generating capacity addition to an existing Generating Facility consistent with the Interconnection Request submitted by Interconnection Customer dated _____; and

WHEREAS, Interconnection Customer desires to interconnect the Generating Facility with the Transmission Provider's Transmission System or Distribution System pursuant to Transmission Provider's most recently approved Attachment J Large Generator Interconnection Procedures ("the LGIP") ; and

WHEREAS, Interconnection Customer has requested Transmission Provider to perform such a Transitional Cluster Study as described in Section 7.2 of this LGIP, which is a Definitive Interconnection System Impact Study to specify and estimate the cost of the equipment, engineering, procurement and construction work needed to physically and electrically connect the Generating Facility as well as other proposed Generating Facilities that established Queue Numbers prior to the Commission's authorization for the Transmission Provider to transition to a Definitive Interconnection Study Process and the Cluster Study transition notice date established in Section 7.

WHEREAS, Interconnection Customer Interconnection Customer has met all requirements described in Section 7.2 of the LGIP within the 60 Calendar Day timeframe prescribed by Section 7 to enter into the Transitional Cluster Study; and

WHEREAS, the Commission has authorized the Transmission Provider to transition to a Definitive Interconnection Study Process and Interconnection Customer has a valid Queue Number as of the Cluster Study transition notice date described in Section 7 of the LGIP, and

NOW, THEREFORE, in consideration of and subject to the mutual covenants contained herein the Parties agreed as follows:

1.0 When used in this Agreement, with initial capitalization, the terms specified shall have the meanings indicated in Transmission Provider's FERC-approved LGIP. References to "Sections" shall be specified Sections of the LGIP.

2.0 Interconnection Customer elects and the Transmission Provider shall cause to be performed a Transitional Cluster Study as described in Section 7.2 of the LGIP. By execution of this Agreement, Interconnection Customer and Transmission Provider agree to rescind any previously executed System Impact Study Agreement and to complete the Transitional Cluster Study pursuant to this Agreement.

3.0 The Transitional Cluster Study shall be based upon the technical information provided by Interconnection Customer in the Interconnection Request. The Transmission Provider reserves the right to request additional technical information from Interconnection Customer as may reasonably become necessary consistent with Good Utility Practice during the course of the Transitional Cluster Study and Interconnection Customer shall provide such data.

4.0 The Transitional Cluster Study report shall provide the following information:

- identification of any circuit breaker short circuit capability limits exceeded as a result of the interconnection;

- identification of any thermal overload or voltage limit violations resulting from the interconnection;

- identification of any instability or inadequately damped response to system disturbances resulting from the interconnection, and

- shall provide a description, estimated cost of, schedule for required facilities to interconnect the Large Generating Facility to the Transmission System and shall address the short circuit, instability, and power flow issues identified in the most recently published System Impact Study.

5.0 Interconnection Customer has met all requirements described in Section 7.2.1 within the timeframe prescribed by Section 7 to enter into the Transitional Cluster Study.

6.0 In addition to meeting all requirements of Section 7.2.1 to enter and proceed through the Transitional Cluster Study, Interconnection Customer shall have previously provided a deposit for the performance of Interconnection Studies at the time of its Interconnection Request. Interconnection Customer's initial deposit shall be applied towards the Transmission Provider's cost of completing the Transitional Cluster Study, and shall be supplemented, if required, pursuant to Section 7.2(c.).

The Interconnection Customer shall be allocated the actual costs of the Transitional Cluster Study according to the method described in Section 10.3. If the Interconnection Customer withdraws the Interconnection Request at any time after Phase 2 commences, the Interconnection Customer shall be subject to the Withdrawal Penalty identified in Section 7.2.6 and the collected amount shall be distributed to fund re-studies of the Transitional Cluster Study or future Cluster Study costs pursuant to Section 4.7.1.2, unless the Transmission Provider determines consistent with Good Utility Practice that a Withdrawal Penalty should not be assigned pursuant to Section 4.7.1. If the Interconnection Customer withdraws or otherwise does not reach Commercial Operation, any deposit(s) or security required by Section 7.2 are fully refundable once the final invoice for study costs and Withdrawal Penalty is settled.

7.0 Miscellaneous. The Transitional Cluster Study Agreement shall include standard miscellaneous terms including, but not limited to, indemnities, representations, disclaimers, warranties, governing law, amendment, execution, waiver, enforceability and assignment, that reflect best practices in the electric industry, that are consistent with regional practices, Applicable Laws and Regulations and the organizational nature of each Party. All of these provisions, to the extent practicable, shall be

consistent with the provisions of the LGIP and the LGIA. Interconnections Customers proceeding through the Transitional Cluster Study process shall separately execute a Facilities Study Agreement, as provided for in Section 7.2.4

IN WITNESS WHEREOF, the Parties have caused this Agreement to be duly executed by their duly authorized officers or agents on the day and year first above written.

[Insert name of Transmission Provider or Transmission Owner, if applicable]

By: _____ By: _____

Title: _____ Title: _____

Date: _____ Date: _____

[Insert name of Interconnection Customer]

By: _____

Title: _____

Date: _____

ATTACHMENT A TO APPENDIX 8-2
Transitional Cluster Study Agreement

ASSUMPTIONS USED IN CONDUCTING THE TRANSITIONAL CLUSTER STUDY

[Assumptions to be completed by Interconnection Customer and Transmission Provider]

APPENDIX 9 TO LGIP
OPTIONAL INTERCONNECTION STUDY AGREEMENT
[Applicable to Section 13 Optional Study Process, applicable only to Serial Interconnection Study Process]

THIS AGREEMENT is made and entered into this___ day of _____, 20___ by and between_____, a _____ organized and existing under the laws of the State of _____, ("Interconnection Customer,") and _____ a_____ _____ existing under the laws of the State of _____, ("Transmission Provider"). Interconnection Customer and Transmission Provider each may be referred to as a "Party," or collectively as the "Parties."

RECITALS

WHEREAS, Interconnection Customer is proposing to develop a Large Generating Facility or generating capacity addition to an existing Generating Facility consistent with the Interconnection Request submitted by Interconnection Customer dated _____;

WHEREAS, Interconnection Customer is proposing to establish an interconnection with the Transmission System; and

WHEREAS, Interconnection Customer has submitted to Transmission Provider an Interconnection Request; and

WHEREAS, on or after the date when Interconnection Customer receives Serial Interconnection System Impact Study results, Interconnection Customer has further requested that Transmission Provider prepare an Optional Interconnection Study;

NOW, THEREFORE, in consideration of and subject to the mutual covenants contained herein the Parties agree as follows:

1.0 When used in this Agreement, with initial capitalization, the terms specified shall have the meanings indicated in Transmission Provider's FERC-approved LGIP.

2.0 Interconnection Customer elects and Transmission Provider shall cause an Optional Interconnection Study consistent with Section 13 of this LGIP to be performed in accordance with the Tariff.

3.0 The scope of the Optional Interconnection Study shall be subject to the assumptions set forth in Attachment A to this Agreement.

4.0 The Optional Interconnection Study shall be performed solely for informational purposes.

5.0 The Optional Interconnection Study report shall provide a sensitivity analysis based on the assumptions specified by Interconnection Customer in Attachment A to this Agreement. The Optional Interconnection Study will identify Transmission Provider's Interconnection Facilities and the Network Upgrades, and the estimated cost thereof, that may be required to

provide transmission service or interconnection service based upon the assumptions specified by Interconnection Customer in Attachment A.

6.0 Interconnection Customer shall provide a deposit of $10,000 for the performance of the Optional Interconnection Study. Transmission Provider's good faith estimate for the time of completion of the Optional Interconnection Study is [insert date].

Upon receipt of the Optional Interconnection Study, Transmission Provider shall charge and Interconnection Customer shall pay the actual costs of the Optional Study.

Any difference between the initial payment and the actual cost of the study shall be paid by or refunded to Interconnection Customer, as appropriate.

7.0 Miscellaneous. The Optional Interconnection Study Agreement shall include standard miscellaneous terms including, but not limited to, indemnities, representations, disclaimers, warranties, governing law, amendment, execution, waiver, enforceability and assignment, that reflect best practices in the electric industry, and that are consistent with regional practices, Applicable Laws and Regulations, and the organizational nature of each Party. All of these provisions, to the extent practicable, shall be consistent with the provisions of the LGIP and the LGIA.

IN WITNESS WHEREOF, the Parties have caused this Agreement to be duly executed by their duly authorized officers or agents on the day and year first above written.

[Insert name of Transmission Provider or Transmission Owner, if applicable]

By: _____ By: _____

Title: _____ Title: _____

Date: _____ Date: _____

[Insert name of Interconnection Customer]

By: _____

Title: _____

Date: _____

Appendix 10 to the Standard Large Generator Interconnection Procedures

STANDARD LARGE GENERATOR INTERCONNECTION AGREEMENT (LGIA) (DEF Zone)

TABLE OF CONTENTS

RECITALS

ARTICLE 1. DEFINITIONS .....

ARTICLE 2. EFFECTIVE DATE, TERM, AND TERMINATION .....

2.1 Effective Date .....

2.2 Term of Agreement .....

2.3 Termination Procedures .....

2.3.1 Written Notice .....

2.3.2 Default .....

2.4 Termination Costs .....

2.5 Disconnection .....

2.6 Survival .....

ARTICLE 3. REGULATORY FILINGS .....

3.1 Filing .....

ARTICLE 4. SCOPE OF SERVICE .....

4.1 Interconnection Product Options .....

4.1.1 Energy Resource Interconnection Service .....

4.1.1.1 The Product .....

4.1.1.2 Transmission Delivery Service Implications .....

4.1.2 Network Resource Interconnection Service .....

4.1.2.1 The Product .....

4.1.2.2 Transmission Delivery Service Implications .....

4.2 Provision of Service .....

4.3 Performance Standards .....

4.4 No Transmission Delivery Service .....

4.5 Interconnection Customer Provided Services .....

ARTICLE 5. INTERCONNECTION FACILITIES ENGINEERING, PROCUREMENT, & CONSTRUCTION .....

5.1 Options
5.1.1 Standard Option.
5.1.2 Alternate Option
5.1.3 Option to Build
5.1.4 Negotiated Option
5.2 General Conditions Applicable to Option to Build
5.3 Liquidated Damages
5.4 Power System Stabilizers
5.5 Equipment Procurement
5.6 Construction Commencement
5.7 Work Progress
5.8 Information Exchange
5.9 Other Interconnection Options
5.9.1 Limited Operation
5.9.2 Provisional Interconnection Service
5.10 Interconnection Customer's Interconnection Facilities ("ICIF")
5.10.1 Interconnection Customer's Interconnection Facility Specifications
5.10.2 Transmission Provider's Review
5.10.3 ICIF Construction
5.11 Transmission Provider's Interconnection Facilities Construction
5.12 Access Rights
5.13 Lands of Other Property Owners
5.14 Permits
5.15 Early Construction of Base Case Facilities
5.16 Suspension
5.17 Taxes
5.17.1 Interconnection Customer Payments Not Taxable
5.17.2 Representations and Covenants
5.17.3 Indemnification for the Cost Consequences of Current Tax Liability Imposed Upon the Transmission Provider
5.17.4 Tax Gross-Up Amount
5.17.5 Private Letter Ruling or Change or Clarification of Law
5.17.6 Subsequent Taxable Events

5.17.7 Contests
5.17.8 Refund
5.17.9 Taxes Other Than Income Taxes
5.17.10 Transmission Owners Who Are Not Transmission Providers
5.18 Tax Status
5.19 Modification
5.19.1 General
5.19.2 Standards
5.19.3 Modification Costs
ARTICLE 6. TESTING AND INSPECTION
6.1 Pre-Commercial Operation Date Testing and Modifications
6.2 Post-Commercial Operation Date Testing and Modifications
6.3 Right to Observe Testing
6.4 Right to Inspect
ARTICLE 7. METERING
7.1 General
7.2 Check Meters
7.3 Standards
7.4 Testing of Metering Equipment
7.5 Metering Data
ARTICLE 8 COMMUNICATIONS
8.1 Interconnection Customer Obligations
8.2 Remote Terminal Unit
8.3 No Annexation
8.4 Provision of Data from a Variable Energy Resource
ARTICLE 9. OPERATIONS
9.1 GENERAL
9.2 CONTROL AREA NOTIFICATION
9.3 TRANSMISSION PROVIDER OBLIGATIONS
9.4 INTERCONNECTION CUSTOMER OBLIGATIONS
9.5 START-UP AND SYNCHRONIZATION
9.6 REACTIVE POWER AND PRIMARY FREQUENCY RESPONSE
9.6.1 Power Factor Design Criteria

9.6.1.1 Synchronous Generation
9.6.1.2 Non-Synchronous Generation
9.6.2 Voltage Schedules
9.6.2.1 Voltage Regulators
9.6.3 Payment for Reactive Power
9.6.4 Primary Frequency Response
9.6.4.1 Governor or Equivalent Controls
9.6.4.2 Timely and Sustained Response
9.6.4.3 Exemptions
9.6.4.4 Electric Storage Resources
9.7 Outages and Interruptions
9.7.1 Outages
9.7.1.1 Outage Authority and Coordination
9.7.1.2 Outage Schedules
9.7.1.3 Outage Restoration
9.7.2 Interruption of Service
9.7.3 Under-Frequency and Over Frequency Conditions
9.7.4 System Protection and Other Control Requirements
9.7.4.1 System Protection Facilities
9.7.5 Requirements for Protection
9.7.6 Power Quality
9.8 Switching and Tagging Rules
9.9 Use of Interconnection Facilities by Third Parties
9.9.1 Purpose of Interconnection Facilities
9.9.2 Third Party Users
9.10 Disturbance Analysis Data Exchange
ARTICLE 10. MAINTENANCE
10.1 Transmission Provider Obligations
10.2 Interconnection Customer Obligations
10.3 Coordination
10.4 Secondary Systems
10.5 Operating and Maintenance Expenses
ARTICLE 11. PERFORMANCE OBLIGATION

11.1 Interconnection Customer Interconnection Facilities .....
11.2 Transmission Provider's Interconnection Facilities .....
11.3 Network Upgrades and Distribution Upgrades .....
11.4 Transmission Credits .....
11.4.1 Repayment of Amounts Advanced for Network Upgrades .....
11.4.2 Special Provision for Affected Systems .....
11.5 Provision of Security .....
11.6 Interconnection Customer Compensation .....
11.6.1 Interconnection Customer Compensation for Actions During Emergency Condition .....
ARTICLE 12. INVOICE .....
12.1 General .....
12.2 Final Invoice .....
12.3 Payment .....
12.4 Disputes .....
ARTICLE 13. EMERGENCIES .....
13.1 Definition .....
13.2 Obligations .....
13.3 Notice .....
13.4 Immediate Action .....
13.5 Transmission Provider Authority .....
13.5.1 General .....
13.5.2 Reduction and Disconnection .....
13.6 Interconnection Customer Authority .....
13.7 Limited Liability .....
ARTICLE 14. REGULATORY REQUIREMENTS AND GOVERNING LAW .....
14.1 Regulatory Requirements .....
14.2 Governing Law .....
ARTICLE 15. NOTICES .....
15.1 General .....
15.2 Billings and Payments .....
15.3 Alternative Forms of Notice .....
15.4 Operations and Maintenance Notice .....

ARTICLE 16. FORCE MAJEURE
ARTICLE 17. DEFAULT
17.1 Default
17.1.1 General
17.1.2 Right to Terminate
ARTICLE 18. INDEMNITY, CONSEQUENTIAL DAMAGES AND INSURANCE
18.1 Indemnity
18.1.1 Indemnified Person
18.1.2 Indemnifying Party
18.1.3 Indemnity Procedures
18.2 Consequential Damages
18.3 Insurance
ARTICLE 19. ASSIGNMENT
ARTICLE 20. SEVERABILITY
ARTICLE 21. COMPARABILITY
ARTICLE 22. CONFIDENTIALITY
22.1 Confidentiality
22.1.1 Term
22.1.2 Scope
22.1.3 Release of Confidential Information
22.1.4 Rights
22.1.5 No Warranties
22.1.6 Standard of Care
22.1.7 Order of Disclosure
22.1.8 Termination of Agreement
22.1.9 Remedies
22.1.10 Disclosure to FERC, its Staff, or a State
ARTICLE 23. ENVIRONMENTAL RELEASES
ARTICLE 24. INFORMATION REQUIREMENTS
24.1 Information Acquisition
24.2 Information Submission by Transmission Provider
24.3 Updated Information Submission by Interconnection Customer
24.4 Information Supplementation

ARTICLE 25. INFORMATION ACCESS AND AUDIT RIGHTS .....
25.1 Information Access .....
25.2 Reporting of Non-Force Majeure Events .....
25.3 Audit Rights .....
25.4 Audit Rights Periods .....
25.4.1 Audit Rights Period for Construction-Related Accounts and Records .....
25.4.2 Audit Rights Period for All Other Accounts and Records .....
25.5 Audit Results .....
ARTICLE 26. SUBCONTRACTORS .....
26.1 General .....
26.2 Responsibility of Principal .....
26.3 No Limitation by Insurance .....
ARTICLE 27. DISPUTES .....
27.1 Submission .....
27.2 External Arbitration Procedures .....
27.3 Arbitration Decisions .....
27.4 Costs .....
ARTICLE 28. REPRESENTATIONS, WARRANTIES, AND COVENANTS .....
28.1 General .....
28.1.1 Good Standing .....
28.1.2 Authority .....
28.1.3 No Conflict .....
28.1.4 Consent and Approval .....
ARTICLE 29. JOINT OPERATING COMMITTEE .....
ARTICLE 30. MISCELLANEOUS .....
30.1 Binding Effect .....
30.2 Conflicts .....
30.3 Rules of Interpretation .....
30.4 Entire Agreement .....
30.5 No Third Party Beneficiaries .....
30.6 Waiver .....
30.7 Headings .....

30.8 Multiple Counterparts .....
30.9 Amendment .....
30.10 Modification by the Parties .....
30.11 Reservation of Rights .....
30.12 No Partnership .....

STANDARD LARGE GENERATOR INTERCONNECTION AGREEMENT

THIS STANDARD LARGE GENERATOR INTERCONNECTION AGREEMENT ("Agreement" or "LGIA") is made and entered into this ____ day of _____ 20__, by and between _____, a _____ organized and existing under the laws of the State/Commonwealth of _____ ("Interconnection Customer" with a Large Generating Facility), and _____, a _____ organized and existing under the laws of the State/Commonwealth of _____ ("Transmission Provider and/or Transmission Owner"). Interconnection Customer and Transmission Provider each may be referred to as a "Party" or collectively as the "Parties."

Recitals

WHEREAS, Transmission Provider operates the Transmission System; and

WHEREAS, Interconnection Customer intends to own, lease and/or control and operate the Generating Facility identified as a Large Generating Facility in Appendix C to this Agreement; and,

WHEREAS, Interconnection Customer and Transmission Provider have agreed to enter into this Agreement for the purpose of interconnecting the Large Generating Facility with the Transmission System;

[If Interconnection Customer and Transmission Provider are one and the same: **WHEREAS,** Interconnection Customer and Transmission Provider are one and the same, and therefore the provisions set forth in Articles 5.17.4, 11.4.1 and 11.5 of this Agreement shall not apply;]

NOW, THEREFORE, in consideration of and subject to the mutual covenants contained herein, it is agreed:

When used in this Standard Large Generator Interconnection Agreement, terms with initial capitalization that are not defined in Article 1 shall have the meanings specified in the Article in which they are used or the Open Access Transmission Tariff (Tariff).

Article 1. Definitions

Adverse System Impact shall mean the negative effects due to technical or operational limits on conductors or equipment being exceeded that may compromise the safety and reliability of the electric system.

Affected System shall mean an electric system other than the Transmission Provider's Transmission System that may be affected by the proposed interconnection.

Affected System Operator shall mean the entity that operates an Affected System.

Affiliate shall mean, with respect to a corporation, partnership or other entity, each such other corporation, partnership or other entity that directly or indirectly, through one or more intermediaries, controls, is controlled by, or is under common control with, such corporation, partnership or other entity.

Ancillary Services shall mean those services that are necessary to support the transmission of capacity and energy from resources to loads while maintaining reliable operation of the Transmission Provider's Transmission System in accordance with Good Utility Practice.

Applicable Laws and Regulations shall mean all duly promulgated applicable federal, state and local laws, regulations, rules, ordinances, codes, decrees, judgments, directives, or judicial or administrative orders, permits and other duly authorized actions of any Governmental Authority.

Applicable Reliability Council shall mean the reliability council applicable to the Transmission System to which the Generating Facility is directly interconnected.

Applicable Reliability Standards shall mean the requirements and guidelines of NERC, the Applicable Reliability Council, and the Control Area of the Transmission System to which the Generating Facility is directly interconnected.

Base Case shall mean the base case power flow, short circuit, and stability data bases used for the Interconnection Studies by the Transmission Provider or Interconnection Customer.

Breach shall mean the failure of a Party to perform or observe any material term or condition of the Standard Large Generator Interconnection Agreement.

Breaching Party shall mean a Party that is in Breach of the Standard Large Generator Interconnection Agreement.

Business Day shall mean Monday through Friday, excluding Federal Holidays.

Calendar Day shall mean any day including Saturday, Sunday or a Federal Holiday.

Cluster shall mean a group of Interconnection Requests (one or more) that are studied together for the purpose of conducting Interconnection Studies.

Cluster Study shall mean an Interconnection Study evaluating one or more Interconnection Requests.

Clustering shall mean the process whereby a group of Interconnection Requests is studied together, instead of serially, for the purpose of conducting the Interconnection Studies.

Commercial Operation shall mean the status of a Generating Facility that has commenced generating electricity for sale, excluding electricity generated during Trial Operation.

Commercial Operation Date of a unit shall mean the date on which the Generating Facility commences Commercial Operation as agreed to by the Parties pursuant to Appendix E to the Standard Large Generator Interconnection Agreement.

Confidential Information shall mean any confidential, proprietary or trade secret information of a plan, specification, pattern, procedure, design, device, list, concept, policy or compilation relating to the present or planned business of a Party, which is designated as confidential by the Party supplying the information, whether conveyed orally, electronically, in writing, through inspection, or otherwise.

Contingent Facilities shall mean those unbuilt Interconnection Facilities and Network Upgrades upon which the Interconnection Request's costs, timing, and study findings are dependent, and if delayed or not built, could cause a need for Re-Studies of the Interconnection Request or a reassessment of the Interconnection Facilities and/or Network Upgrades and/or costs and timing.

Control Area shall mean an electrical system or systems bounded by interconnection metering and telemetry, capable of controlling generation to maintain its interchange schedule with other Control Areas and contributing to frequency regulation of the interconnection. A Control Area must be certified by the Applicable NERC Regional Reliability Entity. Control Area shall have the same meaning as Balancing Authority Area as defined by NERC.

Customer Engagement Window shall have the meaning set forth in Section 10.1 of the LGIP.

Default shall mean the failure of a Breaching Party to cure its Breach in accordance with Article 17 of the Standard Large Generator Interconnection Agreement.

Definitive Interconnection Study Process ("Definitive Interconnection Study") shall mean an interconnection study process adopted at Transmission Provider's option for purposes of administering a Cluster Study Process inclusive of the Informational Interconnection Study Process, the Transitional Serial Study Process, the Transitional Cluster Study Process, the DISIS Request Window, Customer Engagement Window, and the Definitive Interconnection System Impact Study. Both the Resource Solicitation Cluster and the DISIS Cluster are processed under the Definitive Interconnection Study.

Definitive Interconnection System Impact Study ("DISIS") shall mean an engineering study that evaluates the impact of a Cluster of Interconnection Requests on the safety and reliability of the Transmission System and, if applicable, an Affected System.

Definitive Interconnection System Impact Study Agreement ("DISIS Agreement") shall mean the form of agreement contained in Appendix 6-3 of the LGIP for conducting the Definitive Interconnection System Impact Study.

Definitive Interconnection System Impact Study Cluster ("DISIS Cluster") shall mean an engineering study that evaluates the impact the proposed interconnection (s) on the safety and reliability of Transmission System and, if applicable, an Affected System.

DISIS Request Window shall have the meaning set forth in Section 10.1 of the LGIP.

Dispute Resolution shall mean the procedure for resolution of a dispute between the Parties in which they will first attempt to resolve the dispute on an informal basis.

Distribution System shall mean the Transmission Provider's facilities and equipment used to transmit electricity to ultimate usage points such as homes and industries directly from nearby generators or from interchanges with higher voltage transmission networks which transport bulk power over longer distances. The voltage levels at which distribution systems operate differ among areas.

Distribution Upgrades shall mean the additions, modifications, and upgrades to the Transmission Provider's Distribution System at or beyond the Point of Interconnection to facilitate interconnection of the Generating Facility and render the transmission service necessary to effect Interconnection Customer's wholesale sale of electricity in interstate commerce. Distribution Upgrades do not include Interconnection Facilities.

Effective Date shall mean the date on which the Standard Large Generator Interconnection Agreement becomes effective upon execution by the Parties subject to acceptance by FERC, or if filed unexecuted, upon the date specified by FERC.

Emergency Condition shall mean a condition or situation: (1) that in the judgment of the Party making the claim is imminently likely to endanger life or property; or (2) that, in the case of a Transmission Provider, is imminently likely (as determined in a non-discriminatory manner) to cause a material adverse effect on the security of, or damage to Transmission Provider's Transmission System, Transmission Provider's Interconnection Facilities or the electric systems of others to which the Transmission Provider's Transmission System is directly connected; or (3) that, in the case of Interconnection Customer, is imminently likely (as determined in a non-discriminatory manner) to cause a material adverse effect on the security of, or damage to, the Generating Facility or Interconnection Customer's Interconnection Facilities. System restoration and black start shall be considered Emergency Conditions; provided, that Interconnection Customer is not obligated by the Standard Large Generator Interconnection Agreement to possess black start capability.

Energy Resource Interconnection Service ("ERIS") shall mean an Interconnection Service that allows the Interconnection Customer to connect its Generating Facility to the Transmission Provider's Transmission System to be eligible to deliver the Generating Facility's electric output using the existing firm or non-firm capacity of the Transmission Provider's Transmission System on an as available basis. Energy Resource Interconnection Service in and of itself does not convey transmission service.

Engineering & Procurement ("E&P") Agreement shall mean an agreement that authorizes the Transmission Provider to begin engineering and procurement of long lead-time items necessary for the establishment of the interconnection in order to advance the implementation of the Interconnection Request.

Environmental Law shall mean Applicable Laws or Regulations relating to pollution or protection of the environment or natural resources.

Federal Power Act shall mean the Federal Power Act, as amended, 16 U.S.C. §§ 791a et seq.

FERC shall mean the Federal Energy Regulatory Commission (Commission) or its successor.

Force Majeure shall mean any act of God, labor disturbance, act of the public enemy, war, insurrection, riot, fire, storm or flood, explosion, breakage or accident to machinery or equipment, any order, regulation or restriction imposed by governmental, military or lawfully established civilian authorities, or any other cause beyond a Party's control. A Force Majeure event does not include acts of negligence or intentional wrongdoing by the Party claiming Force Majeure.

Generating Facility shall mean Interconnection Customer's device for the production and/or storage for later injection of electricity identified in the Interconnection Request, but shall not include the Interconnection Customer's Interconnection Facilities.

Generating Facility Capacity shall mean the net capacity of the Generating Facility and the aggregate net capacity of the Generating Facility where it includes multiple energy production devices.

Good Utility Practice shall mean any of the practices, methods and acts engaged in or approved by a significant portion of the electric industry during the relevant time period, or any of the practices, methods and acts which, in the exercise of reasonable judgment in light of the facts known at the time the decision was made, could have been expected to accomplish the desired result at a reasonable cost consistent with good business practices, reliability, safety and expedition. Good Utility Practice is not intended to be limited to the optimum practice, method, or act to the exclusion of all others, but rather to be acceptable practices, methods, or acts generally accepted in the region.

Governmental Authority shall mean any federal, state, local or other governmental regulatory or administrative agency, court, commission, department, board, or other governmental subdivision, legislature, rulemaking board, tribunal, or other governmental authority having jurisdiction over the Parties, their respective facilities, or the respective services they provide, and exercising or entitled to exercise any administrative, executive, police, or taxing authority or power; provided, however, that such term does not include Interconnection Customer, Transmission Provider, or any Affiliate thereof.

Hazardous Substances shall mean any chemicals, materials or substances defined as or included in the definition of "hazardous substances," "hazardous wastes," "hazardous materials," "hazardous constituents," "restricted hazardous materials," "extremely hazardous substances," "toxic substances," "radioactive substances," "contaminants," "pollutants," "toxic pollutants" or words of similar meaning and regulatory effect under any applicable Environmental Law, or any other chemical, material or substance, exposure to which is prohibited, limited or regulated by any applicable Environmental Law.

Informational Interconnection Study shall mean an analysis based on assumptions specified by Interconnection Customer in the Informational Interconnection Study Agreement.

Informational Interconnection Study Agreement shall mean the form of agreement contained in Appendix 2 of the LGIP for conducting the Informational Interconnection Study.

Initial Synchronization Date shall mean the date upon which the Generating Facility is initially synchronized and upon which Trial Operation begins.

In-Service Date shall mean the date upon which the Interconnection Customer reasonably expects it will be ready to begin use of the Transmission Provider's Interconnection Facilities to obtain back feed power.

Interconnection Customer shall mean any entity, including the Transmission Provider, Transmission Owner or any of the Affiliates or subsidiaries of either, that proposes to interconnect its Generating Facility with the Transmission Provider's Transmission System.

Interconnection Customer's Interconnection Facilities shall mean all facilities and equipment, as identified in Appendix A of the Standard Large Generator Interconnection Agreement, that are located between the Generating Facility and the Point of Change of Ownership, including any modification, addition, or upgrades to such facilities and equipment necessary to physically and electrically interconnect the Generating Facility to the Transmission Provider's Transmission System. Interconnection Customer's Interconnection Facilities are sole use facilities.

Interconnection Facilities shall mean the Transmission Provider's Interconnection Facilities and the Interconnection Customer's Interconnection Facilities. Collectively, Interconnection Facilities include all facilities and equipment between the Generating Facility and the Point of Interconnection, including any modification, additions or upgrades that are necessary to physically and electrically interconnect the Generating Facility to the Transmission Provider's Transmission System. Interconnection Facilities are sole use facilities and shall not include Distribution Upgrades, Stand Alone Network Upgrades or Network Upgrades. Interconnection Facilities may be shared by more than one Interconnection Customer.

Interconnection Facilities Study shall mean a study conducted by the Transmission Provider or a third party consultant for the Interconnection Customer to determine a list of facilities (including Transmission Provider's Interconnection Facilities and Network Upgrades as identified in either the Serial Interconnection System Impact Study or the Definitive

Interconnection System Impact Study), the cost of those facilities, and the time required to interconnect the Generating Facility with the Transmission Provider's Transmission System. The scope of the study is defined in Section 11 of the Standard Large Generator Interconnection Procedures.

Interconnection Facilities Study Agreement shall mean the form of agreement contained in Appendix 7 of the Standard Large Generator Interconnection Procedures for conducting the Interconnection Facilities Study.

Interconnection Feasibility Study shall mean a preliminary evaluation of the system impact and cost of interconnecting the Generating Facility to the Transmission Provider's Transmission System, the scope of which is described in Section 8 of the Standard Large Generator Interconnection Procedures.

Interconnection Feasibility Study Agreement shall mean the form of agreement contained in Appendix 4 of the Standard Large Generator Interconnection Procedures for conducting the Interconnection Feasibility Study.

Interconnection Request shall mean an Interconnection Customer's request, in the form of Appendix 3 to the Standard Large Generator Interconnection Procedures, in accordance with the Tariff, to interconnect a new Generating Facility, or to increase the capacity of, or make a Material Modification to the operating characteristics of, an existing Generating Facility that is interconnected with the Transmission Provider's Transmission System.

Interconnection Service shall mean the service provided by the Transmission Provider associated with interconnecting the Interconnection Customer's Generating Facility to the Transmission Provider's Transmission System and enabling it to receive electric energy and capacity from the Generating Facility at the Point of Interconnection, pursuant to the terms of the Standard Large Generator Interconnection Agreement and, if applicable, the Transmission Provider's Tariff.

Interconnection Study shall mean any of the following studies: the Interconnection Feasibility Study, the Informational Interconnection Study, the Serial Interconnection System Impact Study, the Definitive Interconnection System Impact Study, and the Interconnection Facilities Study described in the Standard Large Generator Interconnection Procedures. The Transmission Provider shall undertake Interconnection Studies pursuant to either a Serial Interconnection Study Process or a Definitive Interconnection Study Process as described in these Standard Large Generator Interconnection Procedures.

Interconnection Study Agreement shall mean any of the following agreements: the Interconnection Feasibility Study Agreement, the Serial Interconnection System Impact Study Agreement, the Definitive Interconnection System Impact Study Agreement, and the Interconnection Facilities Study Agreement described in the Standard Large Generator Interconnection Procedures.

IRS shall mean the Internal Revenue Service.

Joint Operating Committee shall be a group made up of representatives from Interconnection Customers and the Transmission Provider to coordinate operating and technical considerations of Interconnection Service.

Large Generating Facility shall mean a Generating Facility having a Generating Facility Capacity of more than 20 MW.

Loss shall mean any and all losses relating to injury to or death of any person or damage to property, demand, suits, recoveries, costs and expenses, court costs, attorney fees, and all other obligations by or to third parties, arising out of or resulting from the other Party's performance, or non-performance of its obligations under the Standard Large Generator Interconnection Agreement on behalf of the indemnifying Party, except in cases of gross negligence or intentional wrongdoing by the indemnifying Party.

Material Modification shall mean (1) those modifications that have a material impact on the cost or timing of any Interconnection Request with a later queue priority date in the Serial Interconnection Study Process and (2) those modifications that have a material impact on the cost or timing of any Interconnection Request with (a) a later Queue Position or (b) a Queue Position which is included in the same Cluster, each as in the Definitive Interconnection Study Process.

Metering Equipment shall mean all metering equipment installed or to be installed at the Generating Facility pursuant to the Standard Large Generator Interconnection Agreement at the metering points, including but not limited to instrument transformers, MWh-meters, data acquisition equipment, transducers, remote terminal unit, communications equipment, phone lines, and fiber optics.

NERC shall mean the North American Electric Reliability Council or its successor organization.

Network Resource shall mean any designated generating resource owned, purchased, or leased by a Network Customer under the Network Integration Transmission Service Tariff. Network Resources do not include any resource, or any portion thereof, that is committed for sale to third parties or otherwise cannot be called upon to meet the Network Customer's Network Load on a non-interruptible basis.

Network Resource Interconnection Service ("NRIS") shall mean an Interconnection Service that allows the Interconnection Customer to integrate its Large Generating Facility with the Transmission Provider's Transmission System (1) in a manner comparable to that in which the Transmission Provider integrates its generating facilities to serve native load customers; or (2) in an RTO or ISO with market based congestion management, in the same manner as Network Resources. Network Resource Interconnection Service in and of itself does not convey transmission service.

Network Upgrades shall mean the additions, modifications, and upgrades to the Transmission Provider's Transmission System required at or beyond the point at which the Interconnection Facilities connect to the Transmission Provider's Transmission System to accommodate the interconnection of the Large Generating Facility to the Transmission Provider's Transmission System.

Notice of Dispute shall mean a written notice of a dispute or claim that arises out of or in connection with the Standard Large Generator Interconnection Agreement or its performance.

OASIS shall mean the Transmission Provider's Open Access Same-Time Information System.

Optional Interconnection Study shall mean a sensitivity analysis based on assumptions specified by the Interconnection Customer in the Optional Interconnection Study Agreement.

Optional Interconnection Study Agreement shall mean the form of agreement contained in Appendix 9 of the Standard Large Generator Interconnection Procedures for conducting the Optional Interconnection Study

Party or Parties shall mean Transmission Provider, Transmission Owner, Interconnection Customer or any combination of the above.

Permissible Technological Advancement shall mean modification to equipment that (1) results in electrical performance that is equal to or better than the electrical performance expected prior to the technology change, (2) does not cause any reliability concerns, (3) does not degrade the electrical characteristics of the generating equipment (e.g., the ratings, impedances, efficiencies, capabilities, and performance of the equipment under steady-state and dynamic conditions) and (4) does not have a material impact on the cost or timing of any Interconnection Request with a later queue priority date, and is therefore not a Material Modification. A Permissible Technological Advancement is a change in equipment that may achieve cost or grid performance efficiencies that may include turbines, inverters, plant supervisory controls or other devices but does not include changes in generation technology type or fuel type.

Phase ("Phase 1, Phase 2, or Phase 3") shall mean a distinct part of the Definitive Study Process as described in Section 10.8 of the LGIP.

Point of Change of Ownership shall mean the point, as set forth in Appendix A to the Standard Large Generator Interconnection Agreement, where the Interconnection Customer's Interconnection Facilities connect to the Transmission Provider's Interconnection Facilities.

Point of Interconnection shall mean the point, as set forth in Appendix A to the Standard Large Generator Interconnection Agreement, where the Interconnection Facilities connect to the Transmission Provider's Transmission System.

Provisional Interconnection Service shall mean interconnection service provided by Transmission Provider associated with interconnecting the Interconnection Customer's

Generating Facility to Transmission Provider's Transmission System and enabling that Transmission System to receive electric energy and capacity from the Generating Facility at the Point of Interconnection, pursuant to the terms of the Provisional Large Generator Interconnection Agreement and, if applicable, the Tariff.

Provisional Large Generator Interconnection Agreement shall mean the interconnection agreement for Provisional Interconnection Service established between Transmission Provider and/or the Transmission Owner and the Interconnection Customer. This agreement shall take the form of the Large Generator Interconnection Agreement, modified for provisional purposes. Provisional Large Generator Interconnection Agreements are not eligible for suspension.

Queue shall mean a queue for valid Interconnection Requests for the Serial Interconnection Study Process or the Definitive Interconnection Study Process.

Queue Position shall mean the order of a valid Interconnection Request, relative to all other pending valid Interconnection Requests, in either the Serial Interconnection Study Process or the Definitive Interconnection Study Process. In the Serial Interconnection Study Process, the Queue Position is established based upon the date and time of receipt of the valid Interconnection Request by the Transmission Provider. Where a Transmission Provider is administering a Definitive Interconnection Study Process, all Interconnection Requests studied in a single Cluster shall be considered equally queued but Clusters initiated earlier in time shall be considered to have an earlier Queue Position than clusters initiated later. The Queue Position of an Interconnection Request shall have no bearing on the allocation of the cost of the common Upgrades identified in the applicable Cluster Study (such costs will be allocated among Interconnection Requests in accordance with Section 10.4).

Readiness Milestone(s) shall have the meaning set forth in Section 10.11 of the LGIP.

Reasonable Efforts shall mean, with respect to an action required to be attempted or taken by a Party under the Standard Large Generator Interconnection Agreement, efforts that are timely and consistent with Good Utility Practice and are otherwise substantially equivalent to those a Party would use to protect its own interests.

Resource Plan shall mean any process authorized or required by Applicable Laws and Regulations for, *inter alia*, the selection of Generating Facilities interconnected to the Transmission System of Transmission Provider.

Resource Planning Entity shall mean any entity required to develop a Resource Plan or conduct a Resource Solicitation Process.

Resource Solicitation Cluster shall mean a Cluster Study associated with a Resource Plan or related process.

Resource Solicitation Process shall mean any process authorized or required by Applicable Laws and Regulations for the acquisition of Network Resources by a Resource Planning Entity.

Scoping Meeting shall mean the meeting between representatives of the Interconnection Customer and Transmission Provider conducted for the purpose of discussing the proposed Interconnection Request, alternative interconnection options, to exchange information including any transmission data and earlier study evaluations that would be reasonably expected to affect such interconnection options, to analyze such information, and to determine the potential feasible Points of Interconnection.

Serial Interconnection Study Process shall mean the process of studying interconnection requests on a serial basis inclusive of the Interconnection Feasibility Study, the Serial Interconnection System Impact Study, and the Optional Interconnection Study Process.

Serial Interconnection System Impact Study shall mean an engineering study that evaluates the impact of the proposed interconnection on the safety and reliability of Transmission Provider's Transmission System and, if applicable, an Affected System. The study shall identify and detail the system impacts that would result if the Generating Facility were interconnected without project modifications or system modifications, focusing on the adverse system impacts identified in the Interconnection Feasibility Study, or to study potential impacts, including but not limited to those identified in the Scoping Meeting as described in the LGIP.

Serial Interconnection System Impact Study Agreement shall mean the form of agreement contained in Appendix 5 of the Standard Large Generator Interconnection Procedures for conducting the Serial Interconnection System Impact Study.

Site Control shall mean the exclusive land right to develop, construct, operate, and maintain the Generating Facility over the term of the expected operation of the Generating Facility. Site Control shall include the right to develop, construct, operate, and maintain Interconnection Customer's Interconnection Facilities. Site Control may be demonstrated by documentation establishing: (1) ownership of, a leasehold interest in, or a right to develop a site of sufficient size to construct and operate the Generating Facility and associated Interconnection Customer's Interconnection Facilities; (2) an option to purchase or acquire a leasehold interest in a site of sufficient size to construct and operate the Generating Facility and associated Interconnection Facilities; or (3) any other documentation that clearly demonstrates the right of the Interconnection Customer to exclusively occupy a site of sufficient size to construct and operate the Generating Facility. Site Control for any co-located Generating Facilities is demonstrated by a contract or other agreement demonstrating shared land use for all co-located projects that meet the aforementioned provisions of this Site Control definition.

Small Generating Facility shall mean a Generating Facility that has a Generating Facility Capacity of no more than 20 MW.

Stand Alone Network Upgrades shall mean Network Upgrades that are not part of an Affected System that an Interconnection Customer may construct without affecting day-to-day operations of the Transmission System during their construction. Both the Transmission Provider and the Interconnection Customer must agree as to what constitutes Stand Alone Network Upgrades and identify them in Appendix A to the Standard Large Generator Interconnection Agreement. If the Transmission Provider and Interconnection Customer disagree about whether a particular Network Upgrade is a Stand Alone Network Upgrade, the Transmission Provider must provide the Interconnection Customer a written technical explanation outlining why the Transmission Provider does not consider the Network Upgrade to be a Stand Alone Network Upgrade within 15 days of its determination.

Standard Large Generator Interconnection Agreement (LGIA) shall mean the form of interconnection agreement applicable to an Interconnection Request pertaining to a Large Generating Facility that is included in the Transmission Provider's Tariff.

Standard Large Generator Interconnection Procedures (LGIP) shall mean the interconnection procedures applicable to an Interconnection Request pertaining to a Large Generating Facility that are included in the Transmission Provider's Tariff.

Surplus Interconnection Service shall mean any unneeded portion of Interconnection Service established in a Large Generator Interconnection Agreement, such that if Surplus Interconnection Service is utilized the total amount of Interconnection Service at the Point of Interconnection would remain the same.

System Protection Facilities shall mean the equipment, including necessary protection signal communications equipment, required to protect (1) the Transmission Provider's Transmission System from faults or other electrical disturbances occurring at the Generating Facility and (2) the Generating Facility from faults or other electrical system disturbances occurring on the Transmission Provider's Transmission System or on other delivery systems or other generating systems to which the Transmission Provider's Transmission System is directly connected.

Tariff shall mean the Transmission Provider's Tariff through which open access transmission service and Interconnection Service are offered, as filed with FERC, and as amended or supplemented from time to time, or any successor tariff.

Transmission Owner shall mean an entity that owns, leases or otherwise possesses an interest in the portion of the Transmission System at the Point of Interconnection and may be a Party to the Standard Large Generator Interconnection Agreement to the extent necessary.

Transmission Provider shall mean the public utility (or its designated agent) that owns, controls, or operates transmission or distribution facilities used for the transmission of electricity in interstate commerce and provides transmission service under the Tariff. The term Transmission Provider should be read to include the Transmission Owner when the Transmission Owner is separate from the Transmission Provider.

Transmission Provider's Interconnection Facilities shall mean all facilities and equipment owned, controlled or operated by the Transmission Provider from the Point of Change of Ownership to the Point of Interconnection as identified in Appendix A to the Standard Large Generator Interconnection Agreement, including any modifications, additions or upgrades to such facilities and equipment. Transmission Provider's Interconnection Facilities are sole use facilities (e.g. for generator interconnection) and shall not include Distribution Upgrades, Stand Alone Network Upgrades or Network Upgrades. Transmission Provider's Interconnection Facilities may be shared by more than one Interconnection Customer.

Transmission System shall mean the facilities owned, controlled or operated by the Transmission Provider or Transmission Owner that are used to provide transmission service under the Tariff.

Trial Operation shall mean the period during which Interconnection Customer is engaged in on-site test operations and commissioning of the Generating Facility prior to Commercial Operation.

Variable Energy Resource shall mean a device for the production of electricity that is characterized by an energy source that: (1) is renewable; (2) cannot be stored by the facility owner or operator; and (3) has variability that is beyond the control of the facility owner or operator.

Withdrawal Penalty shall have the meaning set forth in Section 4.7 of the LGIP.

Article 2. Effective Date, Term, and Termination

2.1 Effective Date. This LGIA shall become effective upon execution by the Parties subject to acceptance by FERC (if applicable), or if filed unexecuted, upon the date specified by FERC. Transmission Provider shall promptly file this LGIA with FERC upon execution in accordance with Article 3.1, if required.

2.2 Term of Agreement. Subject to the provisions of Article 2.3, this LGIA shall remain in effect for a period of ten (10) years from the Effective Date or such other longer period as Interconnection Customer may request (Term to be specified in individual agreements) and shall be automatically renewed for each successive one-year period thereafter.

2.3 Termination Procedures.

2.3.1 Written Notice. This LGIA may be terminated by Interconnection Customer after giving Transmission Provider ninety (90) Calendar Days advance written notice, or by Transmission Provider notifying FERC after the Generating Facility permanently ceases Commercial Operation.

2.3.2 Default. Either Party may terminate this LGIA in accordance with Article 17.

2.3.3 Notwithstanding Articles 2.3.1 and 2.3.2, no termination shall become effective until the Parties have complied with all Applicable Laws and Regulations applicable to such termination, including the filing with FERC of a notice of termination of this LGIA, which notice has been accepted for filing by FERC.

2.4 Termination Costs. If a Party elects to terminate this Agreement pursuant to Article 2.3 above, each Party shall pay all costs incurred (including any cancellation costs relating to orders or contracts for Interconnection Facilities and equipment) or charges assessed by the other Party, as of the date of the other Party's receipt of such notice of termination, that are the responsibility of the Terminating Party under this LGIA. In the event of termination by a Party, the Parties shall use commercially Reasonable Efforts to mitigate the costs, damages and charges arising as a consequence of termination. Upon termination of this LGIA, unless otherwise ordered or approved by FERC:

2.4.1 With respect to any portion of Transmission Provider's Interconnection Facilities that have not yet been constructed or installed, Transmission Provider shall to the extent possible and with Interconnection Customer's authorization cancel any pending orders of, or return, any materials or equipment for, or contracts for construction of, such facilities; provided that in the event Interconnection Customer elects not to authorize such cancellation, Interconnection Customer shall assume all payment obligations with respect to such materials, equipment, and contracts, and Transmission Provider shall deliver such material and equipment, and, if necessary, assign such contracts, to Interconnection Customer as soon as practicable, at Interconnection Customer's expense. To the extent that Interconnection Customer has already paid Transmission Provider for any or all such costs of materials or equipment not taken by Interconnection Customer, Transmission Provider shall promptly refund such amounts to Interconnection Customer, less any costs, including penalties incurred by Transmission Provider to cancel any pending orders of or return such materials, equipment, or contracts.

If an Interconnection Customer terminates this LGIA, it shall be responsible for all costs incurred in association with that Interconnection Customer's interconnection, including any cancellation costs relating to orders or contracts for Interconnection Facilities and equipment, and other expenses including any Network Upgrades for which Transmission Provider has incurred expenses and has not been reimbursed by Interconnection Customer.

2.4.2 Transmission Provider may, at its option, retain any portion of such materials, equipment, or facilities that Interconnection Customer chooses not to accept delivery of, in which case Transmission Provider shall be responsible for all costs associated with procuring such materials, equipment, or facilities.

2.4.3 With respect to any portion of the Interconnection Facilities, and any other facilities already installed or constructed pursuant to the terms of this LGIA, Interconnection Customer shall be responsible for all costs associated with the

removal, relocation or other disposition or retirement of such materials, equipment, or facilities.

2.5 Disconnection. Upon termination of this LGIA, the Parties will take all appropriate steps to disconnect the Large Generating Facility from the Transmission System. All costs required to effectuate such disconnection shall be borne by the terminating Party, unless such termination resulted from the non-terminating Party's Default of this LGIA or such non-terminating Party otherwise is responsible for these costs under this LGIA.

2.6 Survival. This LGIA shall continue in effect after termination to the extent necessary to provide for final billings and payments and for costs incurred hereunder, including billings and payments pursuant to this LGIA; to permit the determination and enforcement of liability and indemnification obligations arising from acts or events that occurred while this LGIA was in effect; and to permit each Party to have access to the lands of the other Party pursuant to this LGIA or other applicable agreements, to disconnect, remove or salvage its own facilities and equipment.

Article 3. Regulatory Filings

3.1 Filing. Transmission Provider shall file this LGIA (and any amendment hereto) with the appropriate Governmental Authority, if required. Interconnection Customer may request that any information so provided be subject to the confidentiality provisions of Article 22. If Interconnection Customer has executed this LGIA, or any amendment thereto, Interconnection Customer shall reasonably cooperate with Transmission Provider with respect to such filing and to provide any information reasonably requested by Transmission Provider needed to comply with applicable regulatory requirements.

Article 4. Scope of Service

4.1 Interconnection Product Options. Interconnection Customer has selected the following (checked) type of Interconnection Service:

4.1.1 Energy Resource Interconnection Service.

4.1.1.1 The Product. Energy Resource Interconnection Service allows Interconnection Customer to connect the Large Generating Facility to the Transmission System and be eligible to deliver the Large Generating Facility's output using the existing firm or non-firm capacity of the Transmission System on an "as available" basis. To the extent Interconnection Customer wants to receive Energy Resource Interconnection Service, Transmission Provider shall construct facilities identified in Attachment A.

4.1.1.2 Transmission Delivery Service Implications. Under Energy Resource Interconnection Service, Interconnection Customer will be eligible to inject power from the Large Generating Facility into and deliver power across the interconnecting Transmission Provider's Transmission System on an "as available" basis up to the amount of MWs identified in the applicable stability and steady state studies to the extent the upgrades initially required to qualify for Energy Resource Interconnection Service have been constructed. Where eligible to do so (e.g., PJM, ISO-NE, NYISO), Interconnection Customer may place a bid to sell into the market up to the maximum identified Large Generating Facility output, subject to any conditions specified in the interconnection service approval, and the Large Generating Facility will be dispatched to the extent Interconnection Customer's bid clears. In all other instances, no transmission delivery service from the Large Generating Facility is assured, but Interconnection Customer may obtain Point-to-Point Transmission Service, Network Integration Transmission Service, or be used for secondary network transmission service, pursuant to Transmission Provider's Tariff, up to the maximum output identified in the stability and steady state studies. In those instances, in order for Interconnection Customer to obtain the right to deliver or inject energy beyond the Large Generating Facility Point of Interconnection or to improve its ability to do so, transmission delivery service must be obtained pursuant to the provisions of Transmission Provider's Tariff. The Interconnection Customer's ability to inject its Large Generating Facility output beyond the Point of Interconnection, therefore, will depend on the existing capacity of Transmission Provider's Transmission System at such time as a transmission service request is made that would accommodate such delivery. The provision of firm Point-to-Point Transmission Service or Network Integration Transmission Service may require the construction of additional Network Upgrades.

4.1.2 Network Resource Interconnection Service.

4.1.2.1 The Product. Transmission Provider must conduct the necessary studies and construct the Network Upgrades needed to integrate the Large Generating Facility (1) in a manner comparable to that in which Transmission Provider integrates its generating facilities to serve native load customers; or (2) in an ISO or RTO with market based congestion management, in the same manner as all Network Resources. To the extent Interconnection Customer wants to receive Network Resource Interconnection Service, Transmission Provider shall construct the facilities identified in Attachment A to this LGIA.

4.1.2.2 Transmission Delivery Service Implications. Network Resource Interconnection Service allows Interconnection Customer's Large Generating Facility to be designated by any Network Customer under the Tariff on Transmission Provider's Transmission System as a Network Resource, up to the Large Generating Facility's full output, on the same basis as existing Network Resources interconnected to Transmission Provider's Transmission System, and to be studied as a Network Resource on the assumption that such a designation will occur. Although Network Resource Interconnection Service does not convey a reservation of transmission service, any Network Customer under the Tariff can utilize its network service under the Tariff to obtain delivery of energy from the interconnected Interconnection Customer's Large Generating Facility in the same manner as it accesses Network Resources. A Large Generating Facility receiving Network Resource Interconnection Service may also be used to provide Ancillary Services after technical studies and/or periodic analyses are performed with respect to the Large Generating Facility's ability to provide any applicable Ancillary Services, provided that such studies and analyses have been or would be required in connection with the provision of such Ancillary Services by any existing Network Resource. However, if an Interconnection Customer's Large Generating Facility has not been designated as a Network Resource by any load, it cannot be required to provide Ancillary Services except to the extent such requirements extend to all generating facilities that are similarly situated. The provision of Network Integration Transmission Service or firm Point-to-Point Transmission Service may require additional studies and the construction of additional upgrades. Because such studies and upgrades would be associated with a request for delivery service under the Tariff, cost responsibility for the studies and upgrades would be in accordance with FERC's policy for pricing transmission delivery services.

Network Resource Interconnection Service does not necessarily provide Interconnection Customer with the capability to physically deliver the output of its Large Generating Facility to any particular load on Transmission Provider's Transmission System without incurring congestion costs. In the event of transmission constraints on Transmission Provider's Transmission System, Interconnection Customer's Large Generating Facility shall be subject to the applicable congestion management procedures in Transmission Provider's Transmission System in the same manner as Network Resources.

There is no requirement either at the time of study or interconnection, or at any point in the future, that Interconnection Customer's Large Generating Facility be designated as a Network Resource by a Network Service Customer under the Tariff or that Interconnection Customer identify a specific buyer (or sink). To the extent a Network Customer does designate the Large Generating Facility as a Network Resource, it must do so pursuant to Transmission Provider's Tariff.

Once an Interconnection Customer satisfies the requirements for obtaining Network Resource Interconnection Service, any future transmission service request for delivery from the Large Generating Facility within Transmission Provider's Transmission System of any amount of capacity and/or energy, up to the amount initially studied, will not require that any additional studies be performed or that any further upgrades associated with such Large Generating Facility be undertaken, regardless of whether or not such Large Generating Facility is ever designated by a Network Customer as a Network Resource and regardless of changes in ownership of the Large Generating Facility. However, the reduction or elimination of congestion or redispatch costs may require additional studies and the construction of additional upgrades.

To the extent Interconnection Customer enters into an arrangement for long term transmission service for deliveries from the Large Generating Facility outside Transmission Provider's Transmission System, such request may require additional studies and upgrades in order for Transmission Provider to grant such request.

4.2 Provision of Service. Transmission Provider shall provide Interconnection Service for the Large Generating Facility at the Point of Interconnection.

4.3 Performance Standards. Each Party shall perform all of its obligations under this LGIA in accordance with Applicable Laws and Regulations, Applicable Reliability Standards, and Good Utility Practice, and to the extent a Party is required or prevented or limited in taking any action by such regulations and standards, such Party shall not be deemed to be in Breach of this LGIA for its compliance therewith. If such Party is a Transmission Provider or Transmission Owner, then that Party shall amend the LGIA and submit the amendment to FERC for approval.

4.4 No Transmission Delivery Service. The execution of this LGIA does not constitute a request for, nor the provision of, any transmission delivery service under Transmission Provider's Tariff, and does not convey any right to deliver electricity to any specific customer or Point of Delivery.

4.5 Interconnection Customer Provided Services. The services provided by Interconnection Customer under this LGIA are set forth in Article 9.6 and Article 13.5.1. Interconnection Customer shall be paid for such services in accordance with Article 11.6.

Article 5. Interconnection Facilities Engineering, Procurement, and Construction

5.1 Options. Unless otherwise mutually agreed to between the Parties, Interconnection Customer shall select the In-Service Date, Initial Synchronization Date, and Commercial Operation Date; and either the Standard Option or Alternate Option set forth below for completion of Transmission Provider's Interconnection Facilities and Network Upgrades as set forth in Appendix A, Interconnection Facilities and Network Upgrades, and such dates and selected option shall be set forth in Appendix B, Milestones. At the same time, Interconnection Customer shall indicate whether it elects to exercise the Option to Build set forth in Article 5.1.3 below. If the dates designated by Interconnection Customer are not acceptable to Transmission Provider, Transmission Provider shall so notify Interconnection Customer within thirty (30) Calendar Days. Upon receipt of the notification that Interconnection Customer's designated dates are not acceptable to Transmission Provider, the Interconnection Customer shall notify Transmission Provider within thirty (30) Calendar Days whether it elects to exercise the Option to Build if it has not already elected to exercise the Option to Build.

5.1.1 Standard Option. Transmission Provider shall design, procure, and construct Transmission Provider's Interconnection Facilities and Network Upgrades, using Reasonable Efforts to complete Transmission Provider's Interconnection Facilities and Network Upgrades by the dates set forth in Appendix B, Milestones. Transmission Provider shall not be required to undertake any action which is inconsistent with its standard safety practices, its material and equipment specifications, its design criteria and construction procedures, its labor agreements, and Applicable Laws and Regulations. In the event Transmission Provider reasonably expects that it will not be able to complete Transmission Provider's Interconnection Facilities and Network Upgrades by the specified dates, Transmission Provider shall promptly provide written notice to Interconnection Customer and shall undertake Reasonable Efforts to meet the earliest dates thereafter.

5.1.2 Alternate Option. If the dates designated by Interconnection Customer are acceptable to Transmission Provider, Transmission Provider shall so notify Interconnection Customer within thirty (30) Calendar Days, and shall assume responsibility for the design, procurement and construction of Transmission Provider's Interconnection Facilities by the designated dates.

If Transmission Provider subsequently fails to complete Transmission Provider's Interconnection Facilities by the In-Service Date, to the extent necessary to provide back feed power; or fails to complete Network Upgrades by the Initial Synchronization Date to the extent necessary to allow for Trial Operation at full

power output, unless other arrangements are made by the Parties for such Trial Operation; or fails to complete the Network Upgrades by the Commercial Operation Date, as such dates are reflected in Appendix B, Milestones; Transmission Provider shall pay Interconnection Customer liquidated damages in accordance with Article 5.3, Liquidated Damages, provided, however, the dates designated by Interconnection Customer shall be extended day for day for each day that the applicable RTO or ISO refuses to grant clearances to install equipment.

5.1.3 Option to Build. Interconnection Customer shall have the option to assume responsibility for the design, procurement and construction of Transmission Provider's Interconnection Facilities and Stand Alone Network Upgrades on the dates specified in Article 5.1.2. Transmission Provider and Interconnection Customer must agree as to what constitutes Stand Alone Network Upgrades and identify such Stand Alone Network Upgrades in Appendix A. Except for Stand Alone Network Upgrades, Interconnection Customer shall have no right to construct Network Upgrades under this option.

5.1.4 Negotiated Option. If the dates designated by Interconnection Customer are not acceptable to Transmission Provider, the Parties shall in good faith attempt to negotiate terms and conditions (including revision of the specified dates and liquidated damages, the provision of incentives, or the procurement and construction of all facilities other than Transmission Provider's Interconnection Facilities and Stand Alone Network Upgrades if the Interconnection Customer elects to exercise the Option to Build under Article 5.1.3). If the Parties are unable to reach agreement on such terms and conditions, then, pursuant to Article 5.1.1 (Standard Option), Transmission Provider shall assume responsibility for the design, procurement and construction of all facilities other than Transmission Provider's Interconnection Facilities and Stand Alone Network Upgrades if the Interconnection Customer elects to exercise the Option to build.

5.2 General Conditions Applicable to Option to Build. If Interconnection Customer assumes responsibility for the design, procurement and construction of Transmission Provider's Interconnection Facilities and Stand Alone Network Upgrades,

(1) Interconnection Customer shall engineer, procure equipment, and construct Transmission Provider's Interconnection Facilities and Stand Alone Network Upgrades (or portions thereof) using Good Utility Practice and using standards and specifications provided in advance by Transmission Provider;

(2) Interconnection Customer's engineering, procurement and construction of Transmission Provider's Interconnection Facilities and Stand Alone Network Upgrades shall comply with all requirements of law to which Transmission Provider would be subject in the engineering, procurement or construction of Transmission Provider's Interconnection Facilities and Stand Alone Network Upgrades;

(3) Transmission Provider shall review and approve the engineering design, equipment acceptance tests, and the construction of Transmission Provider's Interconnection Facilities and Stand Alone Network Upgrades;

(4) prior to commencement of construction, Interconnection Customer shall provide to Transmission Provider a schedule for construction of Transmission Provider's Interconnection Facilities and Stand Alone Network Upgrades, and shall promptly respond to requests for information from Transmission Provider;

(5) at any time during construction, Transmission Provider shall have the right to gain unrestricted access to Transmission Provider's Interconnection Facilities and Stand Alone Network Upgrades and to conduct inspections of the same;

(6) at any time during construction, should any phase of the engineering, equipment procurement, or construction of Transmission Provider's Interconnection Facilities and Stand Alone Network Upgrades not meet the standards and specifications provided by Transmission Provider, Interconnection Customer shall be obligated to remedy deficiencies in that portion of Transmission Provider's Interconnection Facilities and Stand Alone Network Upgrades;

(7) Interconnection Customer shall indemnify Transmission Provider for claims arising from Interconnection Customer's construction of Transmission Provider's Interconnection Facilities and Stand Alone Network Upgrades under the terms and procedures applicable to Article 18.1 Indemnity;

(8) Interconnection Customer shall transfer control of Transmission Provider's Interconnection Facilities and Stand Alone Network Upgrades to Transmission Provider;

(9) Unless Parties otherwise agree, Interconnection Customer shall transfer ownership of Transmission Provider's Interconnection Facilities and Stand-Alone Network Upgrades to Transmission Provider;

(10) Transmission Provider shall approve and accept for operation and maintenance Transmission Provider's Interconnection Facilities and Stand Alone Network Upgrades to the extent engineered, procured, and constructed in accordance with this Article 5.2;

(11) Interconnection Customer shall deliver to Transmission Provider "as-built" drawings, information, and any other documents that are reasonably required by Transmission Provider to assure that the Interconnection Facilities and Stand-Alone Network Upgrades are built to the standards and specifications required by Transmission Provider; and

(12) If Interconnection Customer exercises the Option to Build pursuant to Article 5.1.3, Interconnection Customer shall pay Transmission Provider the agreed upon amount of [$ PLACEHOLDER] for Transmission Provider to execute the responsibilities enumerated to Transmission Provider under Article 5.2. Transmission Provider shall invoice Interconnection Customer for this total amount to be divided on a monthly basis pursuant to Article 12.

5.3 Liquidated Damages. The actual damages to Interconnection Customer, in the event Transmission Provider's Interconnection Facilities or Network Upgrades are not completed by the dates designated by Interconnection Customer and accepted by Transmission Provider pursuant to subparagraphs 5.1.2 or 5.1.4, above, may include Interconnection Customer's fixed operation and maintenance costs and lost opportunity costs. Such actual damages are uncertain and impossible to determine at this time. Because of such uncertainty, any liquidated damages paid by Transmission Provider to Interconnection Customer in the event that Transmission Provider does not complete any portion of Transmission Provider's Interconnection Facilities or Network Upgrades by the applicable dates, shall be an amount equal to ½ of 1 percent per day of the actual cost of Transmission Provider's Interconnection Facilities and Network Upgrades, in the aggregate, for which Transmission Provider has assumed responsibility to design, procure and construct.

However, in no event shall the total liquidated damages exceed 20 percent of the actual cost of Transmission Provider's Interconnection Facilities and Network Upgrades for which Transmission Provider has assumed responsibility to design, procure, and construct. The foregoing payments will be made by Transmission Provider to Interconnection Customer as just compensation for the damages caused to Interconnection Customer, which actual damages are uncertain and impossible to determine at this time, and as reasonable liquidated damages, but not as a penalty or a method to secure performance of this LGIA. Liquidated damages, when the Parties agree to them, are the exclusive remedy for the Transmission Provider's failure to meet its schedule.

No liquidated damages shall be paid to Interconnection Customer if: (1) Interconnection Customer is not ready to commence use of Transmission Provider's Interconnection Facilities or Network Upgrades to take the delivery of power for the Large Generating Facility's Trial Operation or to export power from the Large Generating Facility on the specified dates, unless Interconnection Customer would have been able to commence use of Transmission Provider's Interconnection Facilities or Network Upgrades to take the delivery of power for Large Generating Facility's Trial Operation or to export power from the Large Generating Facility, but for Transmission Provider's delay; (2) Transmission Provider's failure to meet the specified dates is the result of the action or inaction of Interconnection Customer or any other Interconnection Customer who has entered into an LGIA with Transmission Provider or any cause beyond Transmission Provider's reasonable control or reasonable ability to cure; (3) the Interconnection Customer has assumed responsibility for the design, procurement and construction of Transmission

Provider's Interconnection Facilities and Stand Alone Network Upgrades; or (4) the Parties have otherwise agreed.

5.4 Power System Stabilizers. The Interconnection Customer shall procure, install, maintain and operate Power System Stabilizers in accordance with the guidelines and procedures established by the Applicable Reliability Council. Transmission Provider reserves the right to reasonably establish minimum acceptable settings for any installed Power System Stabilizers, subject to the design and operating limitations of the Large Generating Facility. If the Large Generating Facility's Power System Stabilizers are removed from service or not capable of automatic operation, Interconnection Customer shall immediately notify Transmission Provider's system operator, or its designated representative. The requirements of this paragraph shall not apply to wind generators.

5.5 Equipment Procurement. If responsibility for construction of Transmission Provider's Interconnection Facilities or Network Upgrades is to be borne by Transmission Provider, then Transmission Provider shall commence design of Transmission Provider's Interconnection Facilities or Network Upgrades and procure necessary equipment as soon as practicable after all of the following conditions are satisfied, unless the Parties otherwise agree in writing:

5.5.1 Transmission Provider has completed the Interconnection Facilities Study pursuant to the Interconnection Facilities Study Agreement;

5.5.2 Transmission Provider has received written authorization to proceed with design and procurement from Interconnection Customer by the date specified in Appendix B, Milestones; and

5.5.3 Interconnection Customer has provided security to Transmission Provider in accordance with Article 11.5 by the dates specified in Appendix B, Milestones.

5.6 Construction Commencement. Transmission Provider shall commence construction of Transmission Provider's Interconnection Facilities and Network Upgrades for which it is responsible as soon as practicable after the following additional conditions are satisfied:

5.6.1 Approval of the appropriate Governmental Authority has been obtained for any facilities requiring regulatory approval;

5.6.2 Necessary real property rights and rights-of-way have been obtained, to the extent required for the construction of a discrete aspect of Transmission Provider's Interconnection Facilities and Network Upgrades;

5.6.3 Transmission Provider has received written authorization to proceed with construction from Interconnection Customer by the date specified in Appendix B, Milestones; and

5.6.4 Interconnection Customer has provided security to Transmission Provider in accordance with Article 11.5 by the dates specified in Appendix B, Milestones.

5.7 Work Progress. The Parties will keep each other advised periodically as to the progress of their respective design, procurement and construction efforts. Either Party may, at any time, request a progress report from the other Party. If, at any time, Interconnection Customer determines that the completion of Transmission Provider's Interconnection Facilities will not be required until after the specified In-Service Date, Interconnection Customer will provide written notice to Transmission Provider of such later date upon which the completion of Transmission Provider's Interconnection Facilities will be required.

5.8 Information Exchange. As soon as reasonably practicable after the Effective Date, the Parties shall exchange information regarding the design and compatibility of the Parties' Interconnection Facilities and compatibility of the Interconnection Facilities with Transmission Provider's Transmission System, and shall work diligently and in good faith to make any necessary design changes.

5.9 Other Interconnection Options.

5.9.1 Limited Operation.
If any of Transmission Provider's Interconnection Facilities or Network Upgrades are not reasonably expected to be completed prior to the Commercial Operation Date of the Large Generating Facility, Transmission Provider shall, upon the request and at the expense of Interconnection Customer, perform operating studies on a timely basis to determine the extent to which the Large Generating Facility and Interconnection Customer's Interconnection Facilities may operate prior to the completion of Transmission Provider's Interconnection Facilities or Network Upgrades consistent with Applicable Laws and Regulations, Applicable Reliability Standards, Good Utility Practice, and this LGIA. Transmission Provider shall permit Interconnection Customer to operate the Large Generating Facility and Interconnection Customer's Interconnection Facilities in accordance with the results of such studies.

5.9.2 Provisional Interconnection Service. Upon the request of Interconnection Customer, and prior to completion of requisite Interconnection Facilities, Network Upgrades, Distribution Upgrades, or System Protection Facilities Transmission Provider may execute a Provisional Large Generator Interconnection Agreement or Interconnection Customer may request the filing of an unexecuted Provisional Large Generator Interconnection Agreement with the Interconnection Customer for limited interconnection service at the discretion of Transmission Provider based upon an evaluation that will consider the results of available studies. Transmission Provider shall determine, through available studies or additional studies as necessary, whether stability, short circuit, thermal, and/or voltage issues would arise if Interconnection Customer interconnects without modifications to the Generating Facility or Transmission System. Transmission Provider shall determine whether any Interconnection Facilities, Network Upgrades, Distribution Upgrades, or System Protection Facilities that are necessary to

meet the requirements of NERC, or any applicable Regional Entity for the interconnection of a new, modified and/or expanded Generating Facility are in place prior to the commencement of Interconnection Service from the Generating Facility. Where available studies indicate that such, Interconnection Facilities, Network Upgrades, Distribution Upgrades, and/or System Protection Facilities that are required for the interconnection of a new, modified and/or expanded Generating Facility are not currently in place, Transmission Provider will perform a study, at the Interconnection Customer's expense, to confirm the facilities that are required for Provisional Interconnection Service. The maximum permissible output of the Generating Facility in the Provisional Large Generator Interconnection Agreement shall be studied and updated annually and at the Interconnection Customer's expense. Interconnection Customer assumes all risk and liabilities with respect to changes between the Provisional Large Generator Interconnection Agreement and the Large Generator Interconnection Agreement, including changes in output limits and Interconnection Facilities, Network Upgrades, Distribution Upgrades, and/or System Protection Facilities cost responsibilities.

5.10 Interconnection Customer's Interconnection Facilities ("ICIF"). Interconnection Customer shall, at its expense, design, procure, construct, own and install the ICIF, as set forth in Appendix A, Interconnection Facilities, Network Upgrades and Distribution Upgrades.

5.10.1 Interconnection Customer's Interconnection Facility Specifications. Interconnection Customer shall submit initial specifications for the ICIF, including System Protection Facilities, to Transmission Provider at least one hundred eighty (180) Calendar Days prior to the Initial Synchronization Date; and final specifications for review and comment at least ninety (90) Calendar Days prior to the Initial Synchronization Date. Transmission Provider shall review such specifications to ensure that the ICIF are compatible with the technical specifications, operational control, and safety requirements of Transmission Provider and comment on such specifications within thirty (30) Calendar Days of Interconnection Customer's submission. All specifications provided hereunder shall be deemed confidential.

5.10.2 Transmission Provider's Review. Transmission Provider's review of Interconnection Customer's final specifications shall not be construed as confirming, endorsing, or providing a warranty as to the design, fitness, safety, durability or reliability of the Large Generating Facility, or the ICIF. Interconnection Customer shall make such changes to the ICIF as may reasonably be required by Transmission Provider, in accordance with Good Utility Practice, to ensure that the ICIF are compatible with the technical specifications, operational control, and safety requirements of Transmission Provider.

5.10.3 ICIF Construction. The ICIF shall be designed and constructed in accordance with Good Utility Practice. Within one hundred twenty (120) Calendar Days after the Commercial Operation Date, unless the Parties agree on another mutually acceptable deadline, Interconnection Customer shall deliver to Transmission

Provider "as-built" drawings, information and documents for the ICIF, such as: a one-line diagram, a site plan showing the Large Generating Facility and the ICIF, plan and elevation drawings showing the layout of the ICIF, a relay functional diagram, relaying AC and DC schematic wiring diagrams and relay settings for all facilities associated with Interconnection Customer's step-up transformers, the facilities connecting the Large Generating Facility to the step-up transformers and the ICIF, and the impedances (determined by factory tests) for the associated step-up transformers and the Large Generating Facility. The Interconnection Customer shall provide Transmission Provider specifications for the excitation system, automatic voltage regulator, Large Generating Facility control and protection settings, transformer tap settings, and communications, if applicable.

5.11 Transmission Provider's Interconnection Facilities Construction. Transmission Provider's Interconnection Facilities shall be designed and constructed in accordance with Good Utility Practice. Upon request, within one hundred twenty (120) Calendar Days after the Commercial Operation Date, unless the Parties agree on another mutually acceptable deadline, Transmission Provider shall deliver to Interconnection Customer the following "as-built" drawings, information and documents for Transmission Provider's Interconnection Facilities [include appropriate drawings and relay diagrams].

Transmission Provider will obtain control of Transmission Provider's Interconnection Facilities and Stand Alone Network Upgrades upon completion of such facilities.

5.12 Access Rights. Upon reasonable notice and supervision by a Party, and subject to any required or necessary regulatory approvals, a Party ("Granting Party") shall furnish at no cost to the other Party ("Access Party") any rights of use, licenses, rights of way and easements with respect to lands owned or controlled by the Granting Party, its agents (if allowed under the applicable agency agreement), or any Affiliate, that are necessary to enable the Access Party to obtain ingress and egress to construct, operate, maintain, repair, test (or witness testing), inspect, replace or remove facilities and equipment to: (i) interconnect the Large Generating Facility with the Transmission System; (ii) operate and maintain the Large Generating Facility, the Interconnection Facilities and the Transmission System; and (iii) disconnect or remove the Access Party's facilities and equipment upon termination of this LGIA. In exercising such licenses, rights of way and easements, the Access Party shall not unreasonably disrupt or interfere with normal operation of the Granting Party's business and shall adhere to the safety rules and procedures established in advance, as may be changed from time to time, by the Granting Party and provided to the Access Party.

5.13 Lands of Other Property Owners. If any part of Transmission Provider or Transmission Owner's Interconnection Facilities and/or Network Upgrades is to be installed on property owned by persons other than Interconnection Customer or Transmission Provider or Transmission Owner, Transmission Provider or Transmission Owner shall at Interconnection Customer's expense use efforts, similar in nature and extent to those that it typically undertakes on its own behalf or on behalf of its Affiliates, including use of its eminent domain authority, and to the extent consistent with state law,

to procure from such persons any rights of use, licenses, rights of way and easements that are necessary to construct, operate, maintain, test, inspect, replace or remove Transmission Provider or Transmission Owner's Interconnection Facilities and/or Network Upgrades upon such property.

5.14 Permits. Transmission Provider or Transmission Owner and Interconnection Customer shall cooperate with each other in good faith in obtaining all permits, licenses, and authorizations that are necessary to accomplish the interconnection in compliance with Applicable Laws and Regulations. With respect to this paragraph, Transmission Provider or Transmission Owner shall provide permitting assistance to Interconnection Customer comparable to that provided to Transmission Provider's own, or an Affiliate's generation.

5.15 Early Construction of Base Case Facilities. Interconnection Customer may request Transmission Provider to construct, and Transmission Provider shall construct, using Reasonable Efforts to accommodate Interconnection Customer's In-Service Date, all or any portion of any Network Upgrades required for Interconnection Customer to be interconnected to the Transmission System which are included in the Base Case of the Facilities Study for Interconnection Customer, and which also are required to be constructed for another Interconnection Customer, but where such construction is not scheduled to be completed in time to achieve Interconnection Customer's In-Service Date.

5.16 Suspension. Interconnection Customer reserves the right, upon written notice to Transmission Provider, to suspend at any time all work by Transmission Provider associated with the construction and installation of Transmission Provider's Interconnection Facilities and/or Network Upgrades required under this LGIA with the condition that Transmission System shall be left in a safe and reliable condition in accordance with Good Utility Practice and Transmission Provider's safety and reliability criteria. In such event, (a) all milestone dates occurring after the effective date of the suspension shall be suspended during the suspension period and (b) Interconnection Customer shall be responsible for all reasonable and necessary costs which Transmission Provider (i) has incurred pursuant to this LGIA prior to the suspension and (ii) incurs in suspending such work, including any costs incurred to perform such work as may be necessary to ensure the safety of persons and property and the integrity of the Transmission System during such suspension and, if applicable, any costs incurred in connection with the cancellation or suspension of material, equipment and labor contracts which Transmission Provider cannot reasonably avoid; provided, however, that prior to canceling or suspending any such material, equipment or labor contract, Transmission Provider shall obtain Interconnection Customer's authorization to do so. Transmission Provider shall invoice Interconnection Customer for such costs pursuant to Article 12 and shall use due diligence to minimize its costs.

In the event that Interconnection Customers suspends work by Transmission Provider required under this LGIA pursuant to this Article 5.16 and requests Transmission Provider to recommence the work required under this LGIA on or before the expiration of the three (3) years following the commencement of such suspension, then the Parties

may revise Appendices A and B per Article 30.10 of this LGIA to account for revised construction sequencing and milestone dates.

In the event Interconnection Customer suspends work by Transmission Provider required under this LGIA pursuant to this Article 5.16, and has not requested Transmission Provider to recommence the work required under this LGIA on or before the expiration of three (3) years following commencement of such suspension, this LGIA shall be deemed terminated. The three-year period shall begin on the date the suspension is requested, or the date of the written notice to Transmission Provider, if no effective date is specified.

5.17 Taxes.

5.17.1 Interconnection Customer Payments Not Taxable. The Parties intend that all payments or property transfers made by Interconnection Customer to Transmission Provider for the installation of Transmission Provider's Interconnection Facilities and the Network Upgrades shall be non-taxable, either as contributions to capital, or as an advance, in accordance with the Internal Revenue Code and any applicable state income tax laws and shall not be taxable as contributions in aid of construction or otherwise under the Internal Revenue Code and any applicable state income tax laws.

5.17.2 Representations and Covenants. In accordance with IRS Notice 2001-82 and IRS Notice 88-129, Interconnection Customer represents and covenants that (i) ownership of the electricity generated at the Large Generating Facility will pass to another party prior to the transmission of the electricity on the Transmission System, (ii) for income tax purposes, the amount of any payments and the cost of any property transferred to Transmission Provider for Transmission Provider's Interconnection Facilities will be capitalized by Interconnection Customer as an intangible asset and recovered using the straight-line method over a useful life of twenty (20) years, and (iii) any portion of Transmission Provider's Interconnection Facilities that is a "dual-use intertie," within the meaning of IRS Notice 88-129, is reasonably expected to carry only a de minimis amount of electricity in the direction of the Large Generating Facility. For this purpose, "de minimis amount" means no more than 5 percent of the total power flows in both directions, calculated in accordance with the "5 percent test" set forth in IRS Notice 88-129. This is not intended to be an exclusive list of the relevant conditions that must be met to conform to IRS requirements for non-taxable treatment.

At Transmission Provider's request, Interconnection Customer shall provide Transmission Provider with a report from an independent engineer confirming its representation in clause (iii), above. Transmission Provider represents and covenants that the cost of Transmission Provider's Interconnection Facilities paid for by Interconnection Customer will have no net effect on the base upon which rates are determined.

5.17.3 Indemnification for the Cost Consequences of Current Tax Liability Imposed Upon the Transmission Provider. Notwithstanding Article 5.17.1, Interconnection Customer shall protect, indemnify and hold harmless Transmission Provider from the cost consequences of any current tax liability imposed against Transmission Provider as the result of payments or property transfers made by Interconnection Customer to Transmission Provider under this LGIA for Interconnection Facilities, as well as any interest and penalties, other than interest and penalties attributable to any delay caused by Transmission Provider.

Transmission Provider shall not include a gross-up for the cost consequences of any current tax liability in the amounts it charges Interconnection Customer under this LGIA unless (i) Transmission Provider has determined, in good faith, that the payments or property transfers made by Interconnection Customer to Transmission Provider should be reported as income subject to taxation or (ii) any Governmental Authority directs Transmission Provider to report payments or property as income subject to taxation; provided, however, that Transmission Provider may require Interconnection Customer to provide security for Interconnection Facilities, in a form reasonably acceptable to Transmission Provider (such as a parental guarantee or a letter of credit), in an amount equal to the cost consequences of any current tax liability under this Article 5.17. Interconnection Customer shall reimburse Transmission Provider for such costs on a fully grossed-up basis, in accordance with Article 5.17.4, within thirty (30) Calendar Days of receiving written notification from Transmission Provider of the amount due, including detail about how the amount was calculated.

The indemnification obligation shall terminate at the earlier of (1) the expiration of the ten year testing period and the applicable statute of limitation, as it may be extended by Transmission Provider upon request of the IRS, to keep these years open for audit or adjustment, or (2) the occurrence of a subsequent taxable event and the payment of any related indemnification obligations as contemplated by this Article 5.17.

5.17.4 Tax Gross-Up Amount. Interconnection Customer's liability for the cost consequences of any current tax liability under this Article 5.17 shall be calculated on a fully grossed-up basis. Except as may otherwise be agreed to by the parties, this means that Interconnection Customer will pay Transmission Provider, in addition to the amount paid for the Interconnection Facilities and Network Upgrades, an amount equal to (1) the current taxes imposed on Transmission Provider ("Current Taxes") on the excess of (a) the gross income realized by Transmission Provider as a result of payments or property transfers made by Interconnection Customer to Transmission Provider under this LGIA (without regard to any payments under this Article 5.17) (the "Gross Income Amount") over (b) the present value of future tax deductions for depreciation that will be available as a result of such payments or property transfers (the "Present

Value Depreciation Amount"), plus (2) an additional amount sufficient to permit Transmission Provider to receive and retain, after the payment of all Current Taxes, an amount equal to the net amount described in clause (1).

For this purpose, (i) Current Taxes shall be computed based on Transmission Provider's composite federal and state tax rates at the time the payments or property transfers are received and Transmission Provider will be treated as being subject to tax at the highest marginal rates in effect at that time (the "Current Tax Rate"), and (ii) the Present Value Depreciation Amount shall be computed by discounting Transmission Provider's anticipated tax depreciation deductions as a result of such payments or property transfers by Transmission Provider's current weighted average cost of capital. Thus, the formula for calculating Interconnection Customer's liability to Transmission Owner pursuant to this Article 5.17.4 can be expressed as follows: (Current Tax Rate x (Gross Income Amount – Present Value of Tax Depreciation))/(1-Current Tax Rate). Interconnection Customer's estimated tax liability in the event taxes are imposed shall be stated in Appendix A, Interconnection Facilities, Network Upgrades and Distribution Upgrades.

5.17.5 Private Letter Ruling or Change or Clarification of Law. At Interconnection Customer's request and expense, Transmission Provider shall file with the IRS a request for a private letter ruling as to whether any property transferred or sums paid, or to be paid, by Interconnection Customer to Transmission Provider under this LGIA are subject to federal income taxation. Interconnection Customer will prepare the initial draft of the request for a private letter ruling, and will certify under penalties of perjury that all facts represented in such request are true and accurate to the best of Interconnection Customer's knowledge. Transmission Provider and Interconnection Customer shall cooperate in good faith with respect to the submission of such request.

Transmission Provider shall keep Interconnection Customer fully informed of the status of such request for a private letter ruling and shall execute either a privacy act waiver or a limited power of attorney, in a form acceptable to the IRS, that authorizes Interconnection Customer to participate in all discussions with the IRS regarding such request for a private letter ruling. Transmission Provider shall allow Interconnection Customer to attend all meetings with IRS officials about the request and shall permit Interconnection Customer to prepare the initial drafts of any follow-up letters in connection with the request.

5.17.6 Subsequent Taxable Events. If, within 10 years from the date on which the relevant Transmission Provider's Interconnection Facilities are placed in service, (i) Interconnection Customer Breaches the covenants contained in Article 5.17.2, (ii) a "disqualification event" occurs within the meaning of IRS Notice 88-129, or (iii) this LGIA terminates and Transmission Provider retains ownership of the Interconnection Facilities and Network Upgrades, Interconnection Customer shall pay a tax gross-up for the cost consequences of any current tax liability imposed

on Transmission Provider, calculated using the methodology described in Article 5.17.4 and in accordance with IRS Notice 90-60.

5.17.7 Contests. In the event any Governmental Authority determines that Transmission Provider's receipt of payments or property constitutes income that is subject to taxation, Transmission Provider shall notify Interconnection Customer, in writing, within thirty (30) Calendar Days of receiving notification of such determination by a Governmental Authority. Upon the timely written request by Interconnection Customer and at Interconnection Customer's sole expense, Transmission Provider may appeal, protest, seek abatement of, or otherwise oppose such determination. Upon Interconnection Customer's written request and sole expense, Transmission Provider may file a claim for refund with respect to any taxes paid under this Article 5.17, whether or not it has received such a determination. Transmission Provider reserves the right to make all decisions with regard to the prosecution of such appeal, protest, abatement or other contest, including the selection of counsel and compromise or settlement of the claim, but Transmission Provider shall keep Interconnection Customer informed, shall consider in good faith suggestions from Interconnection Customer about the conduct of the contest, and shall reasonably permit Interconnection Customer or an Interconnection Customer representative to attend contest proceedings.

Interconnection Customer shall pay to Transmission Provider on a periodic basis, as invoiced by Transmission Provider, Transmission Provider's documented reasonable costs of prosecuting such appeal, protest, abatement or other contest. At any time during the contest, Transmission Provider may agree to a settlement either with Interconnection Customer's consent or after obtaining written advice from nationally-recognized tax counsel, selected by Transmission Provider, but reasonably acceptable to Interconnection Customer, that the proposed settlement represents a reasonable settlement given the hazards of litigation. Interconnection Customer's obligation shall be based on the amount of the settlement agreed to by Interconnection Customer, or if a higher amount, so much of the settlement that is supported by the written advice from nationally-recognized tax counsel selected under the terms of the preceding sentence. The settlement amount shall be calculated on a fully grossed-up basis to cover any related cost consequences of the current tax liability. Any settlement without Interconnection Customer's consent or such written advice will relieve Interconnection Customer from any obligation to indemnify Transmission Provider for the tax at issue in the contest.

5.17.8 Refund. In the event that (a) a private letter ruling is issued to Transmission Provider which holds that any amount paid or the value of any property transferred by Interconnection Customer to Transmission Provider under the terms of this LGIA is not subject to federal income taxation, (b) any legislative change or administrative announcement, notice, ruling or other determination makes it reasonably clear to Transmission Provider in good faith that any amount paid or the value of any property transferred by Interconnection Customer to Transmission Provider under the terms of this LGIA is not taxable to

Transmission Provider, (c) any abatement, appeal, protest, or other contest results in a determination that any payments or transfers made by Interconnection Customer to Transmission Provider are not subject to federal income tax, or (d) if Transmission Provider receives a refund from any taxing authority for any overpayment of tax attributable to any payment or property transfer made by Interconnection Customer to Transmission Provider pursuant to this LGIA, Transmission Provider shall promptly refund to Interconnection Customer the following:

(i) any payment made by Interconnection Customer under this Article 5.17 for taxes that is attributable to the amount determined to be non-taxable, together with interest thereon,

(ii) interest on any amount paid by Interconnection Customer to Transmission Provider for such taxes which Transmission Provider did not submit to the taxing authority, calculated in accordance with the methodology set forth in FERC's regulations at 18 CFR § 35.19a(a)(2)(iii) from the date payment was made by Interconnection Customer to the date Transmission Provider refunds such payment to Interconnection Customer, and

(iii) with respect to any such taxes paid by Transmission Provider, any refund or credit Transmission Provider receives or to which it may be entitled from any Governmental Authority, interest (or that portion thereof attributable to the payment described in clause (i), above) owed to Transmission Provider for such overpayment of taxes (including any reduction in interest otherwise payable by Transmission Provider to any Governmental Authority resulting from an offset or credit); provided, however, that Transmission Provider will remit such amount promptly to Interconnection Customer only after and to the extent that Transmission Provider has received a tax refund, credit or offset from any Governmental Authority for any applicable overpayment of income tax related to Transmission Provider's Interconnection Facilities.

The intent of this provision is to leave the Parties, to the extent practicable, in the event that no taxes are due with respect to any payment for Interconnection Facilities and Network Upgrades hereunder, in the same position they would have been in had no such tax payments been made.

5.17.9 Taxes Other Than Income Taxes. Upon the timely request by Interconnection Customer, and at Interconnection Customer's sole expense, Transmission Provider may appeal, protest, seek abatement of, or otherwise contest any tax (other than federal or state income tax) asserted or assessed against Transmission Provider for which Interconnection Customer may be required to reimburse Transmission Provider under the terms of this LGIA. Interconnection Customer shall pay to Transmission Provider on a periodic basis, as invoiced by Transmission Provider,

Transmission Provider's documented reasonable costs of prosecuting such appeal, protest, abatement, or other contest. Interconnection Customer and Transmission Provider shall cooperate in good faith with respect to any such contest. Unless the payment of such taxes is a prerequisite to an appeal or abatement or cannot be deferred, no amount shall be payable by Interconnection Customer to Transmission Provider for such taxes until they are assessed by a final, non-appealable order by any court or agency of competent jurisdiction. In the event that a tax payment is withheld and ultimately due and payable after appeal, Interconnection Customer will be responsible for all taxes, interest and penalties, other than penalties attributable to any delay caused by Transmission Provider.

5.17.10 Transmission Owners Who Are Not Transmission Providers. If Transmission Provider is not the same entity as the Transmission Owner, then (i) all references in this Article 5.17 to Transmission Provider shall be deemed also to refer to and to include the Transmission Owner, as appropriate, and (ii) this LGIA shall not become effective until such Transmission Owner shall have agreed in writing to assume all of the duties and obligations of Transmission Provider under this Article 5.17 of this LGIA.

5.18 Tax Status. Each Party shall cooperate with the other to maintain the other Party's tax status. Nothing in this LGIA is intended to adversely affect any Transmission Provider's tax exempt status with respect to the issuance of bonds including, but not limited to, Local Furnishing Bonds.

5.19 Modification.

5.19.1 General. Either Party may undertake modifications to its facilities. If a Party plans to undertake a modification that reasonably may be expected to affect the other Party's facilities, that Party shall provide to the other Party sufficient information regarding such modification so that the other Party may evaluate the potential impact of such modification prior to commencement of the work. Such information shall be deemed to be confidential hereunder and shall include information concerning the timing of such modifications and whether such modifications are expected to interrupt the flow of electricity from the Large Generating Facility. The Party desiring to perform such work shall provide the relevant drawings, plans, and specifications to the other Party at least ninety (90) Calendar Days in advance of the commencement of the work or such shorter period upon which the Parties may agree, which agreement shall not unreasonably be withheld, conditioned or delayed.

In the case of Large Generating Facility modifications that do not require Interconnection Customer to submit an Interconnection Request, Transmission Provider shall provide, within thirty (30) Calendar Days (or such other time as the Parties may agree), an estimate of any additional modifications to the Transmission System, Transmission Provider's Interconnection Facilities or

Network Upgrades necessitated by such Interconnection Customer modification and a good faith estimate of the costs thereof.

5.19.2 Standards. Any additions, modifications, or replacements made to a Party's facilities shall be designed, constructed and operated in accordance with this LGIA and Good Utility Practice.

5.19.3 Modification Costs. Interconnection Customer shall not be directly assigned for the costs of any additions, modifications, or replacements that Transmission Provider makes to Transmission Provider's Interconnection Facilities or the Transmission System to facilitate the interconnection of a third party to Transmission Provider's Interconnection Facilities or the Transmission System, or to provide transmission service to a third party under Transmission Provider's Tariff. Interconnection Customer shall be responsible for the costs of any additions, modifications, or replacements to Interconnection Customer's Interconnection Facilities that may be necessary to maintain or upgrade such Interconnection Customer's Interconnection Facilities consistent with Applicable Laws and Regulations, Applicable Reliability Standards or Good Utility Practice.

Article 6. Testing and Inspection

6.1 Pre-Commercial Operation Date Testing and Modifications. Prior to the Commercial Operation Date, Transmission Provider shall test Transmission Provider's Interconnection Facilities and Network Upgrades and Interconnection Customer shall test the Large Generating Facility and Interconnection Customer's Interconnection Facilities to ensure their safe and reliable operation. Similar testing may be required after initial operation. Each Party shall make any modifications to its facilities that are found to be necessary as a result of such testing. Interconnection Customer shall bear the cost of all such testing and modifications. Interconnection Customer shall generate test energy at the Large Generating Facility only if it has arranged for the delivery of such test energy.

6.2 Post-Commercial Operation Date Testing and Modifications. Each Party shall at its own expense perform routine inspection and testing of its facilities and equipment in accordance with Good Utility Practice as may be necessary to ensure the continued interconnection of the Large Generating Facility with the Transmission System in a safe and reliable manner. Each Party shall have the right, upon advance written notice, to require reasonable additional testing of the other Party's facilities, at the requesting Party's expense, as may be in accordance with Good Utility Practice.

6.3 Right to Observe Testing. Each Party shall notify the other Party in advance of its performance of tests of its Interconnection Facilities. The other Party has the right, at its own expense, to observe such testing.

6.4 Right to Inspect. Each Party shall have the right, but shall have no obligation to: (i)observe the other Party's tests and/or inspection of any of its System Protection

Facilities and other protective equipment, including Power System Stabilizers; (ii) review the settings of the other Party's System Protection Facilities and other protective equipment; and (iii) review the other Party's maintenance records relative to the Interconnection Facilities, the System Protection Facilities and other protective equipment. A Party may exercise these rights from time to time as it deems necessary upon reasonable notice to the other Party. The exercise or non-exercise by a Party of any such rights shall not be construed as an endorsement or confirmation of any element or condition of the Interconnection Facilities or the System Protection Facilities or other protective equipment or the operation thereof, or as a warranty as to the fitness, safety, desirability, or reliability of same. Any information that a Party obtains through the exercise of any of its rights under this Article 6.4 shall be deemed to be Confidential Information and treated pursuant to Article 22 of this LGIA.

Article 7. Metering

7.1 General. Each Party shall comply with the Applicable Reliability Council requirements. Unless otherwise agreed by the Parties, Transmission Provider shall install Metering Equipment at the Point of Interconnection prior to any operation of the Large Generating Facility and shall own, operate, test and maintain such Metering Equipment. Power flows to and from the Large Generating Facility shall be measured at or, at Transmission Provider's option, compensated to, the Point of Interconnection. Transmission Provider shall provide metering quantities, in analog and/or digital form, to Interconnection Customer upon request. Interconnection Customer shall bear all reasonable documented costs associated with the purchase, installation, operation, testing and maintenance of the Metering Equipment.

7.2 Check Meters. Interconnection Customer, at its option and expense, may install and operate, on its premises and on its side of the Point of Interconnection, one or more check meters to check Transmission Provider's meters. Such check meters shall be for check purposes only and shall not be used for the measurement of power flows for purposes of this LGIA, except as provided in Article 7.4 below. The check meters shall be subject at all reasonable times to inspection and examination by Transmission Provider or its designee. The installation, operation and maintenance thereof shall be performed entirely by Interconnection Customer in accordance with Good Utility Practice.

7.3 Standards. Transmission Provider shall install, calibrate, and test revenue quality Metering Equipment in accordance with applicable ANSI standards.

7.4 Testing of Metering Equipment. Transmission Provider shall inspect and test all Transmission Provider-owned Metering Equipment upon installation and at least once every two (2) years thereafter. If requested to do so by Interconnection Customer, Transmission Provider shall, at Interconnection Customer's expense, inspect or test Metering Equipment more frequently than every two (2) years. Transmission Provider shall give reasonable notice of the time when any inspection or test shall take place, and Interconnection Customer may have representatives present at the test or inspection. If at

any time Metering Equipment is found to be inaccurate or defective, it shall be adjusted, repaired or replaced at Interconnection Customer's expense, in order to provide accurate metering, unless the inaccuracy or defect is due to Transmission Provider's failure to maintain, then Transmission Provider shall pay. If Metering Equipment fails to register, or if the measurement made by Metering Equipment during a test varies by more than two percent from the measurement made by the standard meter used in the test, Transmission Provider shall adjust the measurements by correcting all measurements for the period during which Metering Equipment was in error by using Interconnection Customer's check meters, if installed. If no such check meters are installed or if the period cannot be reasonably ascertained, the adjustment shall be for the period immediately preceding the test of the Metering Equipment equal to one-half the time from the date of the last previous test of the Metering Equipment.

7.5 Metering Data. At Interconnection Customer's expense, the metered data shall be telemetered to one or more locations designated by Transmission Provider and one or more locations designated by Interconnection Customer. Such telemetered data shall be used, under normal operating conditions, as the official measurement of the amount of energy delivered from the Large Generating Facility to the Point of Interconnection.

Article 8. Communications

8.1 Interconnection Customer Obligations. Interconnection Customer shall maintain satisfactory operating communications with Transmission Provider's Transmission System dispatcher or representative designated by Transmission Provider. Interconnection Customer shall provide standard voice line, dedicated voice line and facsimile communications at its Large Generating Facility control room or central dispatch facility through use of either the public telephone system, or a voice communications system that does not rely on the public telephone system. Interconnection Customer shall also provide the dedicated data circuit(s) necessary to provide Interconnection Customer data to Transmission Provider as set forth in Appendix D, Security Arrangements Details. The data circuit(s) shall extend from the Large Generating Facility to the location(s) specified by Transmission Provider. Any required maintenance of such communications equipment shall be performed by Interconnection Customer. Operational communications shall be activated and maintained under, but not be limited to, the following events: system paralleling or separation, scheduled and unscheduled shutdowns, equipment clearances, and hourly and daily load data.

8.2 Remote Terminal Unit. Prior to the Initial Synchronization Date of the Large Generating Facility, a Remote Terminal Unit, or equivalent data collection and transfer equipment acceptable to the Parties, shall be installed by Interconnection Customer, or by Transmission Provider at Interconnection Customer's expense, to gather accumulated and instantaneous data to be telemetered to the location(s) designated by Transmission Provider through use of a dedicated point-to-point data circuit(s) as indicated in Article 8.1. The communication protocol for the data circuit(s) shall be specified by

Transmission Provider. Instantaneous bi-directional analog real power and reactive power flow information must be telemetered directly to the location(s) specified by Transmission Provider.

Each Party will promptly advise the other Party if it detects or otherwise learns of any metering, telemetry or communications equipment errors or malfunctions that require the attention and/or correction by the other Party. The Party owning such equipment shall correct such error or malfunction as soon as reasonably feasible.

8.3 No Annexation. Any and all equipment placed on the premises of a Party shall be and remain the property of the Party providing such equipment regardless of the mode and manner of annexation or attachment to real property, unless otherwise mutually agreed by the Parties.

8.4 Provision of Data from a Variable Energy Resource. The Interconnection Customer whose Generating Facility is a Variable Energy Resource shall provide meteorological and forced outage data to the Transmission Provider to the extent necessary for the Transmission Provider's development and deployment of power production forecasts for that class of Variable Energy Resources. The Interconnection Customer with a Variable Energy Resource having wind as the energy source, at a minimum, will be required to provide the Transmission Provider with site-specific meteorological data including: temperature, wind speed, wind direction, and atmospheric pressure. The Interconnection Customer with a Variable Energy Resource having solar as the energy source, at a minimum, will be required to provide the Transmission Provider with site-specific meteorological data including: temperature, atmospheric pressure, and irradiance. The Transmission Provider and Interconnection Customer whose Generating Facility is a Variable Energy Resource shall mutually agree to any additional meteorological data that are required for the development and deployment of a power production forecast. The Interconnection Customer whose Generating Facility is a Variable Energy Resource also shall submit data to the Transmission Provider regarding all forced outages to the extent necessary for the Transmission Provider's development and deployment of power production forecasts for that class of Variable Energy Resources. The exact specifications of the meteorological and forced outage data to be provided by the Interconnection Customer to the Transmission Provider, including the frequency and timing of data submittals, shall be made taking into account the size and configuration of the Variable Energy Resource, its characteristics, location, and its importance in maintaining generation resource adequacy and transmission system reliability in its area. All requirements for meteorological and forced outage data must be commensurate with the power production forecasting employed by the Transmission Provider. Such requirements for meteorological and forced outage data are set forth in Appendix C, Interconnection Details, of this LGIA, as they may change from time to time.

Article 9. Operations

9.1 General. Each Party shall comply with the Applicable Reliability Council requirements. Each Party shall provide to the other Party all information that may reasonably be

required by the other Party to comply with Applicable Laws and Regulations and Applicable Reliability Standards.

9.2 Control Area Notification. At least three months before Initial Synchronization Date, Interconnection Customer shall notify Transmission Provider in writing of the Control Area in which the Large Generating Facility will be located. If Interconnection Customer elects to locate the Large Generating Facility in a Control Area other than the Control Area in which the Large Generating Facility is physically located, and if permitted to do so by the relevant transmission tariffs, all necessary arrangements, including but not limited to those set forth in Article 7 and Article 8 of this LGIA, and remote Control Area generator interchange agreements, if applicable, and the appropriate measures under such agreements, shall be executed and implemented prior to the placement of the Large Generating Facility in the other Control Area.

9.3 Transmission Provider Obligations. Transmission Provider shall cause the Transmission System and Transmission Provider's Interconnection Facilities to be operated, maintained and controlled in a safe and reliable manner and in accordance with this LGIA. Transmission Provider may provide operating instructions to Interconnection Customer consistent with this LGIA and Transmission Provider's operating protocols and procedures as they may change from time to time. Transmission Provider will consider changes to its operating protocols and procedures proposed by Interconnection Customer.

9.4 Interconnection Customer Obligations. Interconnection Customer shall at its own expense operate, maintain and control the Large Generating Facility and Interconnection Customer's Interconnection Facilities in a safe and reliable manner and in accordance with this LGIA. Interconnection Customer shall operate the Large Generating Facility and Interconnection Customer's Interconnection Facilities in accordance with all applicable requirements of the Control Area of which it is part, as such requirements are set forth in Appendix C, Interconnection Details, of this LGIA. Appendix C, Interconnection Details, will be modified to reflect changes to the requirements as they may change from time to time. Either Party may request that the other Party provide copies of the requirements set forth in Appendix C, Interconnection Details, of this LGIA.

9.5 Start-Up and Synchronization. Consistent with the Parties' mutually acceptable procedures, Interconnection Customer is responsible for the proper synchronization of the Large Generating Facility to Transmission Provider's Transmission System.

9.6 Reactive Power and Primary Frequency Response

9.6.1 Power Factor Design Criteria.

9.6.1.1 Synchronous Generation. Interconnection Customer shall design the Large Generating Facility to maintain a composite power delivery at continuous rated power output at the Point of Interconnection at a power factor within the range of 0.95 leading

to 0.95 lagging, unless the Transmission Provider has established different requirements that apply to all synchronous generators in the Control Area on a comparable basis.

9.6.1.2 Non-Synchronous Generation. Interconnection Customer shall design the Large Generating Facility to maintain a composite power delivery at continuous rated power output at the high-side of the generator substation at a power factor within the range of 0.95 leading to 0.95 lagging, unless the Transmission Provider has established a different power factor range that applies to all non-synchronous generators in the Control Area on a comparable basis. This power factor range standard shall be dynamic and can be met using, for example, power electronics designed to supply this level of reactive capability (taking into account any limitations due to voltage level, real power output, etc.) or fixed and switched capacitors, or a combination of the two. This requirement shall only apply to newly interconnecting non-synchronous generators that have not yet executed a Facilities Study Agreement as of the effective date of the Final Rule establishing this requirement (Order No. 827).

9.6.2 Voltage Schedules. Once Interconnection Customer has synchronized the Large Generating Facility with the Transmission System, Transmission Provider shall require Interconnection Customer to operate the Large Generating Facility to produce or absorb reactive power within the design limitations of the Large Generating Facility set forth in Article 9.6.1 (Power Factor Design Criteria). Transmission Provider's voltage schedules shall treat all sources of reactive power in the Control Area in an equitable and not unduly discriminatory manner. Transmission Provider shall exercise Reasonable Efforts to provide Interconnection Customer with such schedules at least one (1) day in advance, and may make changes to such schedules as necessary to maintain the reliability of the Transmission System. Interconnection Customer shall operate the Large Generating Facility to maintain the specified output voltage or power factor at the Point of Interconnection within the design limitations of the Large Generating Facility set forth in Article 9.6.1 (Power Factor Design Criteria). If Interconnection Customer is unable to maintain the specified voltage or power factor, it shall promptly notify the System Operator.

9.6.2.1 Voltage Regulators. Whenever the Large Generating Facility is operated in parallel with the Transmission System and voltage regulators are capable of operation, Interconnection Customer shall operate the Large Generating Facility with its voltage regulators in automatic operation. If the Large Generating Facility's voltage regulators are not capable of such automatic operation, Interconnection Customer shall immediately notify Transmission Provider's system operator, or its designated representative, and ensure that such Large Generating Facility's reactive power

production or absorption (measured in MVARs) are within the design capability of the Large Generating Facility's generating unit(s) and steady state stability limits. Interconnection Customer shall not cause its Large Generating Facility to disconnect automatically or instantaneously from the Transmission System or trip any generating unit comprising the Large Generating Facility for an under or over frequency condition unless the abnormal frequency condition persists for a time period beyond the limits set forth in ANSI/IEEE Standard C37.106, or such other standard as applied to other generators in the Control Area on a comparable basis.

9.6.3 Payment for Reactive Power. Transmission Provider is required to pay Interconnection Customer for reactive power that Interconnection Customer provides or absorbs from the Large Generating Facility when Transmission Provider requests Interconnection Customer to operate its Large Generating Facility outside the range specified in Article 9.6.1, provided that if Transmission Provider pays its own or affiliated generators for reactive power service within the specified range, it must also pay Interconnection Customer. Payments shall be pursuant to Article 11.6 or such other agreement to which the Parties have otherwise agreed.

9.6.4 Primary Frequency Response. Interconnection Customer shall ensure the primary frequency response capability of its Large Generating Facility by installing, maintaining, and operating a functioning governor or equivalent controls. The term "functioning governor or equivalent controls" as used herein shall mean the required hardware and/or software that provides frequency responsive real power control with the ability to sense changes in system frequency and autonomously adjust the Large Generating Facility's real power output in accordance with the droop and deadband parameters and in the direction needed to correct frequency deviations. Interconnection Customer is required to install a governor or equivalent controls with the capability of operating: (1) with a maximum 5 percent droop and ±0.036 Hz deadband; or (2) in accordance with the relevant droop, deadband, and timely and sustained response settings from an approved NERC Reliability Standard providing for equivalent or more stringent parameters. The droop characteristic shall be: (1) based on the nameplate capacity of the Large Generating Facility, and shall be linear in the range of frequencies between 59 to 61 Hz that are outside of the deadband parameter; or (2) based on an approved NERC Reliability Standard providing for an equivalent or more stringent parameter. The deadband parameter shall be: the range of frequencies above and below nominal (60 Hz) in which the governor or equivalent controls is not expected to adjust the Large Generating Facility's real power output in response to frequency deviations. The deadband shall be implemented: (1) without a step to the droop curve, that is, once the frequency deviation exceeds the deadband parameter, the expected change in the Large Generating Facility's real power output in response to frequency deviations shall

start from zero and then increase (for under-frequency deviations) or decrease (for over-frequency deviations) linearly in proportion to the magnitude of the frequency deviation; or (2) in accordance with an approved NERC Reliability Standard providing for an equivalent or more stringent parameter. Interconnection Customer shall notify Transmission Provider that the primary frequency response capability of the Large Generating Facility has been tested and confirmed during commissioning. Once Interconnection Customer has synchronized the Large Generating Facility with the Transmission System, Interconnection Customer shall operate the Large Generating Facility consistent with the provisions specified in Articles 9.6.4.1 and 9.6.4.2 of this Agreement. The primary frequency response requirements contained herein shall apply to both synchronous and non-synchronous Large Generating Facilities.

9.6.4.1 **Governor or Equivalent Controls.** Whenever the Large Generating Facility in operated in parallel with the Transmission System, Interconnection Customer shall operate the Large Generating Facility with its governor or equivalent controls in service and responsive to frequency. Interconnection Customer shall: (1) in coordination with the Transmission Provider and/or the relevant balancing authority, set the deadband parameter to: (1) a maximum of ±0.036 Hz and set the droop parameter to a maximum of 5 percent; or (2) implement the relevant droop and deadband settings from an approved NERC Reliability Standard that provides for equivalent or more stringent parameters. Interconnection Customer shall be required to provide the status and settings of the governor or equivalent control to Transmission Provider and/or the relevant balancing authority upon request. If the Interconnection Customer needs to operate the Large Generating Facility with its governor or equivalent controls not in service, Interconnection Customer shall immediately notify Transmission Provider and the relevant balancing authority, and provide both with the following information: (1) the operating status of the governor or equivalent controls (i.e., whether it is currently out of service or when it will be taken out of service); (2) the reasons for removing the governor or equivalent controls will be returned to service; and (3) a reasonable estimate of when the governor or equivalent controls will be returned to service. Interconnection Customer shall make Reasonable Efforts to return its governor or equivalent controls into service as soon as practicable. Interconnection Customer shall make Reasonable Efforts to keep outages of the Large Generating Facility's governor or equivalent controls to minimum whenever the Large Generating Facility is operated in parallel with the Transmission System.

9.6.4.2 **Timely and Sustained Response.** Interconnection Customer shall ensure that the Large Generating Facility's real power response to

sustained frequency deviations outside of the deadband setting is automatically provided and shall begin immediately after frequency deviates outside of the deadband, and to the extent the Large Generating Facility has operating capability in the direction needed to correct the frequency deviation. Interconnection Customer shall not block or otherwise inhibit the ability of the governor or equivalent controls to respond and shall ensure that the response is not inhibited, except under certain operational constraints including, but not limited to, ambient temperature limitations, physical energy limitations, outages of mechanical equipment, or regulatory requirements. The Large Generating Facility shall sustain the real power response at least until system frequency returns to a value within the deadband setting of the governor or equivalent controls. A Commission-approved Reliability Standard with equivalent or more stringent requirements shall supersede the above requirements.

9.6.4.3 **Exemptions.** Large Generating Facilities that are regulated by the United States Nuclear Regulatory Commission shall be exempt from Articles 9.6.4, 9.6.4.1, and 9.6.4.2 of this Agreement. Large Generating Facilities that are behind the meter generation that is sized-to-load (i.e., the thermal load and the generation are near-balanced in real-time operation and the generation is primarily controlled to maintain the unique thermal, chemical, or mechanical output necessary for the operating requirements of its host facility) shall be required to install primary frequency response capability in accordance with the droop and deadband capability requirements specified in Article 9.6.4, but shall be otherwise exempt from the operating requirements in Articles 9.6.4, 9.6.4.1, 9.6.4.2, and 9.6.4.4 of this Agreement.

9.6.4.4 **Electric Storage Resources.** Interconnection Customer interconnecting an electric storage resource shall establish an operating range in Appendix C of its LGIA that specifies a minimum state of charge and a maximum state of charge between which the electric storage resource will be required to provide primary frequency response consistent with the conditions set forth in Articles 9.6.4, 9.6.4.1, 9.6.4.2 and 9.6.4.3 of this Agreement. Appendix C shall specify whether the operating range is static or dynamic, and shall consider (1) the expected magnitude of frequency deviations in the interconnection; (2) the expected duration that system frequency will remain outside of the deadband parameter in the interconnection; (3) the expected incidence of frequency deviations outside of the deadband parameter in the interconnection; (4) the physical capabilities of the electric storage resource; (5) operational limitations of the electric storage resource

due to manufacturer specifications; and (6) any other relevant factors agreed to by Transmission Provider and Interconnection Customer, and in consultation with the relevant transmission owner or balancing authority as appropriate. If the operating range is dynamic, then Appendix C must establish how frequently the operating range will be reevaluated and the factors that may be considered during its reevaluation.

Interconnection Customer's electric storage resource is required to provide timely and sustained primary frequency response consistent with Article 9.6.4.2 of this Agreement when it is online and dispatched to inject electricity to the Transmission System and/or receive electricity from the Transmission System. This excludes circumstances when the electric storage resource is not dispatched to inject electricity to the Transmission System and/or dispatched to receive electricity from the Transmission System. If Interconnection Customer's electric storage resource is charging at the time of a frequency deviation outside of its deadband parameter, it is to increase (for over-frequency deviations) or decrease (for under-frequency deviations) the rate at which it is charging in accordance with its droop parameter. Interconnection Customer's electric storage resource is not required to change from charging to discharging, or vice versa, unless the response necessitated by the droop and deadband settings requires it to do so and it is technically capable of making such a transition.

9.7 Outages and Interruptions.

9.7.1 Outages.

9.7.1.1 Outage Authority and Coordination. Each Party may in accordance with Good Utility Practice in coordination with the other Party remove from service any of its respective Interconnection Facilities or Network Upgrades that may impact the other Party's facilities as necessary to perform maintenance or testing or to install or replace equipment. Absent an Emergency Condition, the Party scheduling a removal of such facility(ies) from service will use Reasonable Efforts to schedule such removal on a date and time mutually acceptable to the Parties. In all circumstances, any Party planning to remove such facility(ies) from service shall use Reasonable Efforts to minimize the effect on the other Party of such removal.

9.7.1.2 Outage Schedules. Transmission Provider shall post scheduled outages of its transmission facilities on the OASIS. Interconnection Customer shall submit its planned maintenance

schedules for the Large Generating Facility to Transmission Provider for a minimum of a rolling twenty-four month period. Interconnection Customer shall update its planned maintenance schedules as necessary. Transmission Provider may request Interconnection Customer to reschedule its maintenance as necessary to maintain the reliability of the Transmission System; provided, however, adequacy of generation supply shall not be a criterion in determining Transmission System reliability. Transmission Provider shall compensate Interconnection Customer for any additional direct costs that Interconnection Customer incurs as a result of having to reschedule maintenance, including any additional overtime, breaking of maintenance contracts or other costs above and beyond the cost Interconnection Customer would have incurred absent Transmission Provider's request to reschedule maintenance. Interconnection Customer will not be eligible to receive compensation, if during the twelve (12) months prior to the date of the scheduled maintenance, Interconnection Customer had modified its schedule of maintenance activities.

9.7.1.3 **Outage Restoration.** If an outage on a Party's Interconnection Facilities or Network Upgrades adversely affects the other Party's operations or facilities, the Party that owns or controls the facility that is out of service shall use Reasonable Efforts to promptly restore such facility(ies) to a normal operating condition consistent with the nature of the outage. The Party that owns or controls the facility that is out of service shall provide the other Party, to the extent such information is known, information on the nature of the Emergency Condition, an estimated time of restoration, and any corrective actions required. Initial verbal notice shall be followed up as soon as practicable with written notice explaining the nature of the outage.

9.7.2 **Interruption of Service.** If required by Good Utility Practice to do so, Transmission Provider may require Interconnection Customer to interrupt or reduce deliveries of electricity if such delivery of electricity could adversely affect Transmission Provider's ability to perform such activities as are necessary to safely and reliably operate and maintain the Transmission System. The following provisions shall apply to any interruption or reduction permitted under this Article 9.7.2:

9.7.2.1 The interruption or reduction shall continue only for so long as reasonably necessary under Good Utility Practice;

9.7.2.2 Any such interruption or reduction shall be made on an equitable, non-discriminatory basis with respect to all generating facilities directly connected to the Transmission System;

9.7.2.3 When the interruption or reduction must be made under circumstances which do not allow for advance notice, Transmission Provider shall notify Interconnection Customer by telephone as soon as practicable of the reasons for the curtailment, interruption, or reduction, and, if known, its expected duration. Telephone notification shall be followed by written notification as soon as practicable;

9.7.2.4 Except during the existence of an Emergency Condition, when the interruption or reduction can be scheduled without advance notice, Transmission Provider shall notify Interconnection Customer in advance regarding the timing of such scheduling and further notify Interconnection Customer of the expected duration. Transmission Provider shall coordinate with Interconnection Customer using Good Utility Practice to schedule the interruption or reduction during periods of least impact to Interconnection Customer and Transmission Provider; and

9.7.2.5 The Parties shall cooperate and coordinate with each other to the extent necessary in order to restore the Large Generating Facility, Interconnection Facilities, and the Transmission System to their normal operating state, consistent with system conditions and Good Utility Practice.

9.7.3 Under-Frequency and Over Frequency Conditions. The Transmission System is designed to automatically activate a load-shed program as required by the Applicable Reliability Council in the event of an under-frequency system disturbance. Interconnection Customer shall implement under-frequency and over-frequency relay set points for the Large Generating Facility as required by the Applicable Reliability Council to ensure "ride through" capability of the Transmission System. Large Generating Facility response to frequency deviations of pre-determined magnitudes, both under-frequency and over-frequency deviations, shall be studied and coordinated with Transmission Provider in accordance with Good Utility Practice. The term "ride through" as used herein shall mean the ability of a Generating Facility to stay connected to and synchronized with the Transmission System during system disturbances within a range of under-frequency and over-frequency conditions, in accordance with Good Utility Practice.

9.7.4 System Protection and Other Control Requirements.

9.7.4.1 System Protection Facilities. Interconnection Customer shall, at its expense, install, operate and maintain System Protection Facilities as a part of the Large Generating Facility or Interconnection Customer's Interconnection Facilities.

Transmission Provider shall install at Interconnection Customer's expense any System Protection Facilities that may be required on Transmission Provider's Interconnection Facilities or the Transmission System as a result of the interconnection of the Large Generating Facility and Interconnection Customer's Interconnection Facilities.

9.7.4.2 Each Party's protection facilities shall be designed and coordinated with other systems in accordance with Good Utility Practice.

9.7.4.3 Each Party shall be responsible for protection of its facilities consistent with Good Utility Practice.

9.7.4.4 Each Party's protective relay design shall incorporate the necessary test switches to perform the tests required in Article 6. The required test switches will be placed such that they allow operation of lockout relays while preventing breaker failure schemes from operating and causing unnecessary breaker operations and/or the tripping of Interconnection Customer's units.

9.7.4.5 Each Party will test, operate and maintain System Protection Facilities in accordance with Good Utility Practice.

9.7.4.6 Prior to the In-Service Date, and again prior to the Commercial Operation Date, each Party or its agent shall perform a complete calibration test and functional trip test of the System Protection Facilities. At intervals suggested by Good Utility Practice and following any apparent malfunction of the System Protection Facilities, each Party shall perform both calibration and functional trip tests of its System Protection Facilities. These tests do not require the tripping of any in-service generation unit. These tests do, however, require that all protective relays and lockout contacts be activated.

9.7.5 Requirements for Protection. In compliance with Good Utility Practice, Interconnection Customer shall provide, install, own, and maintain relays, circuit breakers and all other devices necessary to remove any fault contribution of the Large Generating Facility to any short circuit occurring on the Transmission System not otherwise isolated by Transmission Provider's equipment, such that the removal of the fault contribution shall be coordinated with the protective requirements of the Transmission System. Such protective equipment shall include, without limitation, a disconnecting device or switch with load-interrupting capability located between the Large Generating Facility and the Transmission System at a site selected upon mutual agreement (not to be unreasonably withheld, conditioned or delayed) of the Parties. Interconnection Customer shall be responsible for protection of the Large Generating Facility and

Interconnection Customer's other equipment from such conditions as negative sequence currents, over- or under-frequency, sudden load rejection, over- or under-voltage, and generator loss-of-field. Interconnection Customer shall be solely responsible to disconnect the Large Generating Facility and Interconnection Customer's other equipment if conditions on the Transmission System could adversely affect the Large Generating Facility.

9.7.6 Power Quality. Neither Party's facilities shall cause excessive voltage flicker nor introduce excessive distortion to the sinusoidal voltage or current waves as defined by ANSI Standard C84.1-1989, in accordance with IEEE Standard 519, or any applicable superseding electric industry standard. In the event of a conflict between ANSI Standard C84.1-1989, or any applicable superseding electric industry standard, ANSI Standard C84.1-1989, or the applicable superseding electric industry standard, shall control.

9.8 Switching and Tagging Rules. Each Party shall provide the other Party a copy of its switching and tagging rules that are applicable to the other Party's activities. Such switching and tagging rules shall be developed on a non-discriminatory basis. The Parties shall comply with applicable switching and tagging rules, as amended from time to time, in obtaining clearances for work or for switching operations on equipment.

9.9 Use of Interconnection Facilities by Third Parties.

9.9.1 Purpose of Interconnection Facilities. Except as may be required by Applicable Laws and Regulations, or as otherwise agreed to among the Parties, the Interconnection Facilities shall be constructed for the sole purpose of interconnecting the Large Generating Facility to the Transmission System and shall be used for no other purpose.

9.9.2 Third Party Users. If required by Applicable Laws and Regulations or if the Parties mutually agree, such agreement not to be unreasonably withheld, to allow one or more third parties to use Transmission Provider's Interconnection Facilities, or any part thereof, Interconnection Customer will be entitled to compensation for the capital expenses it incurred in connection with the Interconnection Facilities based upon the pro rata use of the Interconnection Facilities by Transmission Provider, all third party users, and Interconnection Customer, in accordance with Applicable Laws and Regulations or upon some other mutually-agreed upon methodology. In addition, cost responsibility for ongoing costs, including operation and maintenance costs associated with the Interconnection Facilities, will be allocated between Interconnection Customer and any third party users based upon the pro rata use of the Interconnection Facilities by Transmission Provider, all third party users, and Interconnection Customer, in accordance with Applicable Laws and Regulations or upon some other mutually agreed upon methodology. If the issue of such compensation or allocation cannot be resolved through such negotiations, it shall be submitted to FERC for resolution.

9.10 Disturbance Analysis Data Exchange. The Parties will cooperate with one another in the analysis of disturbances to either the Large Generating Facility or Transmission Provider's Transmission System by gathering and providing access to any information relating to any disturbance, including information from oscillography, protective relay targets, breaker operations and sequence of events records, and any disturbance information required by Good Utility Practice.

Article 10. Maintenance

10.1 Transmission Provider Obligations. Transmission Provider shall maintain the Transmission System and Transmission Provider's Interconnection Facilities in a safe and reliable manner and in accordance with this LGIA.

10.2 Interconnection Customer Obligations. Interconnection Customer shall maintain the Large Generating Facility and Interconnection Customer's Interconnection Facilities in a safe and reliable manner and in accordance with this LGIA.

10.3 Coordination. The Parties shall confer regularly to coordinate the planning, scheduling and performance of preventive and corrective maintenance on the Large Generating Facility and the Interconnection Facilities.

10.4 Secondary Systems. Each Party shall cooperate with the other in the inspection, maintenance, and testing of control or power circuits that operate below 600 volts, AC or DC, including, but not limited to, any hardware, control or protective devices, cables, conductors, electric raceways, secondary equipment panels, transducers, batteries, chargers, and voltage and current transformers that directly affect the operation of a Party's facilities and equipment which may reasonably be expected to impact the other Party. Each Party shall provide advance notice to the other Party before undertaking any work on such circuits, especially on electrical circuits involving circuit breaker trip and close contacts, current transformers, or potential transformers.

10.5 Operating and Maintenance Expenses. Subject to the provisions herein addressing the use of facilities by others, and except for operations and maintenance expenses associated with modifications made for providing interconnection or transmission service to a third party and such third party pays for such expenses, Interconnection Customer shall be responsible for all reasonable expenses including overheads, associated with: (1) owning, operating, maintaining, repairing, and replacing Interconnection Customer's Interconnection Facilities; and (2) operation, maintenance, repair and replacement of Transmission Provider's Interconnection Facilities.

Article 11. Performance Obligation

11.1 Interconnection Customer Interconnection Facilities. Interconnection Customer shall design, procure, construct, install, own and/or control Interconnection Customer Interconnection Facilities described in Appendix A, Interconnection Facilities, Network Upgrades and Distribution Upgrades, at its sole expense.

11.2 Transmission Provider's Interconnection Facilities. Transmission Provider or Transmission Owner shall design, procure, construct, install, own and/or control the Transmission Provider's Interconnection Facilities described in Appendix A, Interconnection Facilities, Network Upgrades and Distribution Upgrades, at the sole expense of the Interconnection Customer.

11.3 Network Upgrades and Distribution Upgrades. Transmission Provider or Transmission Owner shall design, procure, construct, install, and own the Network Upgrades and Distribution Upgrades described in Appendix A, Interconnection Facilities, Network Upgrades and Distribution Upgrades. The Interconnection Customer shall be responsible for all costs related to Distribution Upgrades. Unless Transmission Provider or Transmission Owner elects to fund the capital for the Network Upgrades, they shall be solely funded by Interconnection Customer.

11.4 Transmission Credits.

11.4.1 Repayment of Amounts Advanced for Network Upgrades. Interconnection Customer shall be entitled to a cash repayment, equal to the total amount paid to Transmission Provider and Affected System Operator, if any, for the Network Upgrades, including any tax gross-up or other tax-related payments associated with Network Upgrades, and not refunded to Interconnection Customer pursuant to Article 5.17.8 or otherwise, to be paid to Interconnection Customer on a dollar-for-dollar basis for the non-usage sensitive portion of transmission charges, as payments are made under Transmission Provider's Tariff and Affected System's Tariff for transmission services with respect to the Large Generating Facility. Any repayment shall include interest calculated in accordance with the methodology set forth in FERC's regulations at 18 C.F.R. § 35.19a(a)(2)(iii) from the date of any payment for Network Upgrades through the date on which the Interconnection Customer receives a repayment of such payment pursuant to this subparagraph. Interconnection Customer may assign such repayment rights to any person.

Notwithstanding the foregoing, Interconnection Customer, Transmission Provider, and Affected System Operator may adopt any alternative payment schedule that is mutually agreeable so long as Transmission Provider and Affected System Operator take one of the following actions no later than five years from the Commercial Operation Date: (1) return to Interconnection Customer any amounts advanced for Network Upgrades not previously repaid, or (2) declare in writing that Transmission Provider or Affected System Operator will continue to provide payments to Interconnection Customer on a dollar-for-dollar basis for the non-usage sensitive portion of transmission charges, or

develop an alternative schedule that is mutually agreeable and provides for the return of all amounts advanced for Network Upgrades not previously repaid; however, full reimbursement shall not extend beyond twenty (20) years from the Commercial Operation Date.

If the Large Generating Facility fails to achieve Commercial Operation, but it or another Generating Facility is later constructed and makes use of the Network Upgrades, Transmission Provider and Affected System Operator shall at that time reimburse Interconnection Customer for the amounts advanced for the Network Upgrades. Before any such reimbursement can occur, the Interconnection Customer, or the entity that ultimately constructs the Generating Facility, if different, is responsible for identifying the entity to which reimbursement must be made.

11.4.2 Special Provisions for Affected Systems. Unless Transmission Provider provides, under the LGIA, for the repayment of amounts advanced to Affected System Operator for Network Upgrades, Interconnection Customer and Affected System Operator shall enter into an agreement that provides for such repayment. The agreement shall specify the terms governing payments to be made by Interconnection Customer to the Affected System Operator as well as the repayment by the Affected System Operator.

11.4.3 Notwithstanding any other provision of this LGIA, nothing herein shall be construed as relinquishing or foreclosing any rights, including but not limited to firm transmission rights, capacity rights, transmission congestion rights, or transmission credits, that Interconnection Customer, shall be entitled to, now or in the future under any other agreement or tariff as a result of, or otherwise associated with, the transmission capacity, if any, created by the Network Upgrades, including the right to obtain cash reimbursements or transmission credits for transmission service that is not associated with the Large Generating Facility.

11.5 Provision of Security. At least thirty (30) Calendar Days prior to the commencement of the procurement, installation, or construction of a discrete portion of a Transmission Provider's Interconnection Facilities, Network Upgrades, or Distribution Upgrades, Interconnection Customer shall provide Transmission Provider, at Interconnection Customer's option, a guarantee, a surety bond, letter of credit or other form of security that is reasonably acceptable to Transmission Provider and is consistent with the Uniform Commercial Code of the jurisdiction identified in Article 14.2.1. Such security for payment shall be in an amount sufficient to cover the costs for constructing, procuring and installing the applicable portion of Transmission Provider's Interconnection Facilities, Network Upgrades, or Distribution Upgrades and shall be reduced on a dollar-for-dollar basis for payments made to Transmission Provider for these purposes.

In addition:

11.5.1 The guarantee must be made by an entity that meets the creditworthiness requirements of Transmission Provider, and contain terms and conditions that guarantee payment of any amount that may be due from Interconnection Customer, up to an agreed-to maximum amount.

11.5.2 The letter of credit must be issued by a financial institution reasonably acceptable to Transmission Provider and must specify a reasonable expiration date.

11.5.3 The surety bond must be issued by an insurer reasonably acceptable to Transmission Provider and must specify a reasonable expiration date.

11.6 Interconnection Customer Compensation. If Transmission Provider requests or directs Interconnection Customer to provide a service pursuant to Articles 9.6.3 (Payment for Reactive Power), or 13.5.1 of this LGIA, Transmission Provider shall compensate Interconnection Customer in accordance with Interconnection Customer's applicable rate schedule then in effect unless the provision of such service(s) is subject to an RTO or ISO FERC-approved rate schedule. Interconnection Customer shall serve Transmission Provider or RTO or ISO with any filing of a proposed rate schedule at the time of such filing with FERC. To the extent that no rate schedule is in effect at the time the Interconnection Customer is required to provide or absorb any Reactive Power under this LGIA, Transmission Provider agrees to compensate Interconnection Customer in such amount as would have been due Interconnection Customer had the rate schedule been in effect at the time service commenced; provided, however, that such rate schedule must be filed at FERC or other appropriate Governmental Authority within sixty (60) Calendar Days of the commencement of service.

11.6.1 Interconnection Customer Compensation for Actions During Emergency Condition. Transmission Provider or RTO or ISO shall compensate Interconnection Customer for its provision of real and reactive power and other Emergency Condition services that Interconnection Customer provides to support the Transmission System during an Emergency Condition in accordance with Article 11.6.

Article 12. Invoice

12.1 General. Each Party shall submit to the other Party, on a monthly basis, invoices of amounts due for the preceding month. Each invoice shall state the month to which the invoice applies and fully describe the services and equipment provided. The Parties may discharge mutual debts and payment obligations due and owing to each other on the same date through netting, in which case all amounts a Party owes to the other Party under this LGIA, including interest payments or credits, shall be netted so that only the net amount remaining due shall be paid by the owing Party.

12.2 Final Invoice. Within six months after the first to occur of either (a) completion of the construction of Transmission Provider's Interconnection Facilities and the Network Upgrades or (b) termination of this LGIA, Transmission Provider shall provide an invoice of the final cost of the construction of Transmission Provider's Interconnection Facilities and the Network Upgrades and shall set forth such costs in sufficient detail to enable Interconnection Customer to compare the actual costs with the estimates and to ascertain deviations, if any, from the cost estimates. Transmission Provider shall refund to Interconnection Customer any amount by which the actual payment by Interconnection Customer for estimated costs exceeds the actual costs of construction within thirty (30) Calendar Days of the issuance of such final construction invoice.

12.3 Payment. Invoices shall be rendered to the paying Party at the address specified in Appendix F. The Party receiving the invoice shall pay the invoice within thirty (30) Calendar Days of receipt. All payments shall be made in immediately available funds payable to the other Party, or by wire transfer to a bank named and account designated by the invoicing Party. Payment of invoices by either Party will not constitute a waiver of any rights or claims either Party may have under this LGIA. If Interconnection Customer has not paid the final invoice within thirty (30) Calendar Days of receipt, then Transmission Provider shall be entitled to utilize the security provided by the Interconnection Customer under this LGIA as payment for the amount due under the final invoice. After Transmission Provider has received payment for the final invoice whether through timely payment or utilization of security, Transmission Provider shall refund any remaining security to Interconnection Customer.

12.4 Disputes. In the event of a billing dispute between Transmission Provider and Interconnection Customer, Transmission Provider shall continue to provide Interconnection Service under this LGIA as long as Interconnection Customer: (i) continues to make all payments not in dispute; and (ii) pays to Transmission Provider or into an independent escrow account the portion of the invoice in dispute, pending resolution of such dispute. If Interconnection Customer fails to meet these two requirements for continuation of service, then Transmission Provider may provide notice to Interconnection Customer of a Default pursuant to Article 17. Within thirty (30) Calendar Days after the resolution of the dispute, the Party that owes money to the other Party shall pay the amount due with interest calculated in accord with the methodology set forth in FERC's regulations at 18 CFR § 35.19a(a)(2)(iii).

Article 13. Emergencies

13.1 Definition. "Emergency Condition" shall mean a condition or situation: (i) that in the judgment of the Party making the claim is imminently likely to endanger life or property; or (ii) that, in the case of Transmission Provider, is imminently likely (as determined in a non-discriminatory manner) to cause a material adverse effect on the security of, or damage to the Transmission System, Transmission Provider's Interconnection Facilities or the Transmission Systems of others to which the Transmission System is directly connected; or (iii) that, in the case of Interconnection Customer, is imminently likely (as

determined in a non-discriminatory manner) to cause a material adverse effect on the security of, or damage to**,** the Large Generating Facility or Interconnection Customer's Interconnection Facilities' System restoration and black start shall be considered Emergency Conditions; provided, that Interconnection Customer is not obligated by this LGIA to possess black start capability.

13.2 Obligations. Each Party shall comply with the Emergency Condition procedures of the applicable ISO/RTO, NERC, the Applicable Reliability Council, Applicable Laws and Regulations, and any emergency procedures agreed to by the Joint Operating Committee.

13.3 Notice. Transmission Provider shall notify Interconnection Customer promptly when it becomes aware of an Emergency Condition that affects Transmission Provider's Interconnection Facilities or the Transmission System that may reasonably be expected to affect Interconnection Customer's operation of the Large Generating Facility or Interconnection Customer's Interconnection Facilities. Interconnection Customer shall notify Transmission Provider promptly when it becomes aware of an Emergency Condition that affects the Large Generating Facility or Interconnection Customer's Interconnection Facilities that may reasonably be expected to affect the Transmission System or Transmission Provider's Interconnection Facilities. To the extent information is known, the notification shall describe the Emergency Condition, the extent of the damage or deficiency, the expected effect on the operation of Interconnection Customer's or Transmission Provider's facilities and operations, its anticipated duration and the corrective action taken and/or to be taken. The initial notice shall be followed as soon as practicable with written notice.

13.4 Immediate Action. Unless, in Interconnection Customer's reasonable judgment, immediate action is required, Interconnection Customer shall obtain the consent of Transmission Provider, such consent to not be unreasonably withheld, prior to performing any manual switching operations at the Large Generating Facility or Interconnection Customer's Interconnection Facilities in response to an Emergency Condition either declared by Transmission Provider or otherwise regarding the Transmission System.

13.5 Transmission Provider Authority.

13.5.1 General. Transmission Provider may take whatever actions or inactions with regard to the Transmission System or Transmission Provider's Interconnection Facilities it deems necessary during an Emergency Condition in order to (i) preserve public health and safety, (ii) preserve the reliability of the Transmission System or Transmission Provider's Interconnection Facilities, (iii) limit or prevent damage, and (iv) expedite restoration of service.

Transmission Provider shall use Reasonable Efforts to minimize the effect of such actions or inactions on the Large Generating Facility or Interconnection Customer's Interconnection Facilities. Transmission Provider may, on the basis of technical considerations, require the Large Generating Facility to mitigate an

Emergency Condition by taking actions necessary and limited in scope to remedy the Emergency Condition, including, but not limited to, directing Interconnection Customer to shut-down, start-up, increase or decrease the real or reactive power output of the Large Generating Facility; implementing a reduction or disconnection pursuant to Article 13.5.2; directing Interconnection Customer to assist with blackstart (if available) or restoration efforts; or altering the outage schedules of the Large Generating Facility and Interconnection Customer's Interconnection Facilities. Interconnection Customer shall comply with all of Transmission Provider's operating instructions concerning Large Generating Facility real power and reactive power output within the manufacturer's design limitations of the Large Generating Facility's equipment that is in service and physically available for operation at the time, in compliance with Applicable Laws and Regulations.

13.5.2 Reduction and Disconnection. Transmission Provider may reduce Interconnection Service or disconnect the Large Generating Facility or Interconnection Customer's Interconnection Facilities, when such, reduction or disconnection is necessary under Good Utility Practice due to Emergency Conditions. These rights are separate and distinct from any right of curtailment of Transmission Provider pursuant to Transmission Provider's Tariff. When Transmission Provider can schedule the reduction or disconnection in advance, Transmission Provider shall notify Interconnection Customer of the reasons, timing and expected duration of the reduction or disconnection. Transmission Provider shall coordinate with Interconnection Customer using Good Utility Practice to schedule the reduction or disconnection during periods of least impact to Interconnection Customer and Transmission Provider. Any reduction or disconnection shall continue only for so long as reasonably necessary under Good Utility Practice. The Parties shall cooperate with each other to restore the Large Generating Facility, the Interconnection Facilities, and the Transmission System to their normal operating state as soon as practicable consistent with Good Utility Practice.

13.6 Interconnection Customer Authority. Consistent with Good Utility Practice and the LGIA and the LGIP, Interconnection Customer may take actions or inactions with regard to the Large Generating Facility or Interconnection Customer's Interconnection Facilities during an Emergency Condition in order to (i) preserve public health and safety, (ii) preserve the reliability of the Large Generating Facility or Interconnection Customer's Interconnection Facilities, (iii) limit or prevent damage, and (iv) expedite restoration of service. Interconnection Customer shall use Reasonable Efforts to minimize the effect of such actions or inactions on the Transmission System and Transmission Provider's Interconnection Facilities. Transmission Provider shall use Reasonable Efforts to assist Interconnection Customer in such actions.

13.7 Limited Liability. Except as otherwise provided in Article 11.6.1 of this LGIA, neither Party shall be liable to the other for any action it takes in responding to an Emergency

Condition so long as such action is made in good faith and is consistent with Good Utility Practice.

Article 14. Regulatory Requirements and Governing Law

14.1 Regulatory Requirements. Each Party's obligations under this LGIA shall be subject to its receipt of any required approval or certificate from one or more Governmental Authorities in the form and substance satisfactory to the applying Party, or the Party making any required filings with, or providing notice to, such Governmental Authorities, and the expiration of any time period associated therewith. Each Party shall in good faith seek and use its Reasonable Efforts to obtain such other approvals. Nothing in this LGIA shall require Interconnection Customer to take any action that could result in its inability to obtain, or its loss of, status or exemption under the Federal Power Act, the Public Utility Holding Company Act of 1935, as amended, or the Public Utility Regulatory Policies Act of 1978.

14.2 Governing Law.

14.2.1 The validity, interpretation and performance of this LGIA and each of its provisions shall be governed by the laws of the state where the Point of Interconnection is located, without regard to its conflicts of law principles.

14.2.2 This LGIA is subject to all Applicable Laws and Regulations.

14.2.3 Each Party expressly reserves the right to seek changes in, appeal, or otherwise contest any laws, orders, rules, or regulations of a Governmental Authority.

Article 15. Notices.

15.1 General. Unless otherwise provided in this LGIA, any notice, demand or request required or permitted to be given by either Party to the other and any instrument required or permitted to be tendered or delivered by either Party in writing to the other shall be effective when delivered and may be so given, tendered or delivered, by recognized national courier, or by depositing the same with the United States Postal Service with postage prepaid, for delivery by certified or registered mail, addressed to the Party, or personally delivered to the Party, at the address set out in Appendix F, Addresses for Delivery of Notices and Billings.

Either Party may change the notice information in this LGIA by giving five (5) Business Days written notice prior to the effective date of the change.

15.2 Billings and Payments. Billings and payments shall be sent to the addresses set out in Appendix F.

15.3 Alternative Forms of Notice. Any notice or request required or permitted to be given by a Party to the other and not required by this Agreement to be given in writing may be so given by telephone, facsimile or email to the telephone numbers and email addresses set out in Appendix F.

15.4 Operations and Maintenance Notice. Each Party shall notify the other Party in writing of the identity of the person(s) that it designates as the point(s) of contact with respect to the implementation of Articles 9 and 10.

Article 16. Force Majeure

16.1 Force Majeure.

16.1.1 Economic hardship is not considered a Force Majeure event.

16.1.2 Neither Party shall be considered to be in Default with respect to any obligation hereunder, (including obligations under Article 4), other than the obligation to pay money when due, if prevented from fulfilling such obligation by Force Majeure. A Party unable to fulfill any obligation hereunder (other than an obligation to pay money when due) by reason of Force Majeure shall give notice and the full particulars of such Force Majeure to the other Party in writing or by telephone as soon as reasonably possible after the occurrence of the cause relied upon. Telephone notices given pursuant to this article shall be confirmed in writing as soon as reasonably possible and shall specifically state full particulars of the Force Majeure, the time and date when the Force Majeure occurred and when the Force Majeure is reasonably expected to cease. The Party affected shall exercise due diligence to remove such disability with reasonable dispatch, but shall not be required to accede or agree to any provision not satisfactory to it in order to settle and terminate a strike or other labor disturbance.

Article 17. Default

17.1 Default

17.1.1 General. No Default shall exist where such failure to discharge an obligation (other than the payment of money) is the result of Force Majeure as defined in this LGIA or the result of an act of omission of the other Party. Upon a Breach, the non-breaching Party shall give written notice of such Breach to the breaching Party. Except as provided in Article 17.1.2, the breaching Party shall have thirty (30) Calendar Days from receipt of the Default notice within which to cure such Breach; provided however, if such Breach is not capable of cure within thirty (30) Calendar Days, the breaching Party shall commence such cure within thirty (30) Calendar Days after notice and continuously and diligently complete such cure

within ninety (90) Calendar Days from receipt of the Default notice; and, if cured within such time, the Breach specified in such notice shall cease to exist.

17.1.2 Right to Terminate. If a Breach is not cured as provided in this article, or if a Breach is not capable of being cured within the period provided for herein, the non-breaching Party shall have the right to declare a Default and terminate this LGIA by written notice at any time until cure occurs, and be relieved of any further obligation hereunder and, whether or not that Party terminates this LGIA, to recover from the breaching Party all amounts due hereunder, plus all other damages and remedies to which it is entitled at law or in equity. The provisions of this article will survive termination of this LGIA.

Article 18. Indemnity, Consequential Damages and Insurance

18.1 Indemnity. The Parties shall at all times indemnify, defend, and hold the other Party harmless from, any and all damages, losses, claims, including claims and actions relating to injury to or death of any person or damage to property, demand, suits, recoveries, costs and expenses, court costs, attorney fees, and all other obligations by or to third parties, arising out of or resulting from the other Party's action or inactions of its obligations under this LGIA on behalf of the Indemnifying Party, except in cases of gross negligence or intentional wrongdoing by the Indemnified Party.

18.1.1 Indemnified Person. If an Indemnified Person is entitled to indemnification under this Article 18 as a result of a claim by a third party, and the Indemnifying Party fails, after notice and reasonable opportunity to proceed under Article 18.1, to assume the defense of such claim, such Indemnified Person may at the expense of the Indemnifying Party contest, settle or consent to the entry of any judgment with respect to, or pay in full, such claim.

18.1.2 Indemnifying Party. If an Indemnifying Party is obligated to indemnify and hold any Indemnified Person harmless under this Article 18, the amount owing to the Indemnified Person shall be the amount of such Indemnified Person's actual Loss, net of any insurance or other recovery.

18.1.3 Indemnity Procedures. Promptly after receipt by an Indemnified Person of any claim or notice of the commencement of any action or administrative or legal proceeding or investigation as to which the indemnity provided for in Article 18.1 may apply, the Indemnified Person shall notify the Indemnifying Party of such fact. Any failure of or delay in such notification shall not affect a Party's indemnification obligation unless such failure or delay is materially prejudicial to the Indemnifying Party.

The Indemnifying Party shall have the right to assume the defense thereof with counsel designated by such Indemnifying Party and reasonably satisfactory to the Indemnified Person. If the defendants in any such action include one or more

Indemnified Persons and the Indemnifying Party and if the Indemnified Person reasonably concludes that there may be legal defenses available to it and/or other Indemnified Persons which are different from or additional to those available to the Indemnifying Party, the Indemnified Person shall have the right to select separate counsel to assert such legal defenses and to otherwise participate in the defense of such action on its own behalf. In such instances, the Indemnifying Party shall only be required to pay the fees and expenses of one additional attorney to represent an Indemnified Person or Indemnified Persons having such differing or additional legal defenses.

The Indemnified Person shall be entitled, at its expense, to participate in any such action, suit or proceeding, the defense of which has been assumed by the Indemnifying Party. Notwithstanding the foregoing, the Indemnifying Party (i) shall not be entitled to assume and control the defense of any such action, suit or proceedings if and to the extent that, in the opinion of the Indemnified Person and its counsel, such action, suit or proceeding involves the potential imposition of criminal liability on the Indemnified Person, or there exists a conflict or adversity of interest between the Indemnified Person and the Indemnifying Party, in such event the Indemnifying Party shall pay the reasonable expenses of the Indemnified Person, and (ii) shall not settle or consent to the entry of any judgment in any action, suit or proceeding without the consent of the Indemnified Person, which shall not be reasonably withheld, conditioned or delayed.

18.2 Consequential Damages. Other than the Liquidated Damages heretofore described, in no event shall either Party be liable under any provision of this LGIA for any losses, damages, costs or expenses for any special, indirect, incidental, consequential, or punitive damages, including but not limited to loss of profit or revenue, loss of the use of equipment, cost of capital, cost of temporary equipment or services, whether based in whole or in part in contract, in tort, including negligence, strict liability, or any other theory of liability; provided, however, that damages for which a Party may be liable to the other Party under another agreement will not be considered to be special, indirect, incidental, or consequential damages hereunder.

18.3 Insurance. Each party shall, at its own expense, maintain in force throughout the period of this LGIA, and until released by the other Party, the following minimum insurance coverages, with insurers authorized to do business in the state where the Point of Interconnection is located:

18.3.1 Employers' Liability and Workers' Compensation Insurance providing statutory benefits in accordance with the laws and regulations of the state in which the Point of Interconnection is located.

18.3.2 Commercial General Liability Insurance including premises and operations, personal injury, broad form property damage, broad form blanket contractual liability coverage (including coverage for the contractual indemnification)

products and completed operations coverage, coverage for explosion, collapse and underground hazards, independent contractors coverage, coverage for pollution to the extent normally available and punitive damages to the extent normally available and a cross liability endorsement, with minimum limits of One Million Dollars ($1,000,000) per occurrence/One Million Dollars ($1,000,000) aggregate combined single limit for personal injury, bodily injury, including death and property damage.

18.3.3 Comprehensive Automobile Liability Insurance for coverage of owned and non-owned and hired vehicles, trailers or semi-trailers designed for travel on public roads, with a minimum, combined single limit of One Million Dollars ($1,000,000) per occurrence for bodily injury, including death, and property damage.

18.3.4 Excess Public Liability Insurance over and above the Employers' Liability Commercial General Liability and Comprehensive Automobile Liability Insurance coverage, with a minimum combined single limit of Twenty Million Dollars ($20,000,000) per occurrence/Twenty Million Dollars ($20,000,000) aggregate.

18.3.5 The Commercial General Liability Insurance, Comprehensive Automobile Insurance and Excess Public Liability Insurance policies shall name the other Party, its parent, associated and Affiliate companies and their respective directors, officers, agents, servants and employees ("Other Party Group") as additional insured. All policies shall contain provisions whereby the insurers waive all rights of subrogation in accordance with the provisions of this LGIA against the Other Party Group and provide thirty (30) Calendar Days advance written notice to the Other Party Group prior to anniversary date of cancellation or any material change in coverage or condition.

18.3.6 The Commercial General Liability Insurance, Comprehensive Automobile Liability Insurance and Excess Public Liability Insurance policies shall contain provisions that specify that the policies are primary and shall apply to such extent without consideration for other policies separately carried and shall state that each insured is provided coverage as though a separate policy had been issued to each, except the insurer's liability shall not be increased beyond the amount for which the insurer would have been liable had only one insured been covered. Each Party shall be responsible for its respective deductibles or retentions.

18.3.7 The Commercial General Liability Insurance, Comprehensive Automobile Liability Insurance and Excess Public Liability Insurance policies, if written on a Claims First Made Basis, shall be maintained in full force and effect for two (2) years after termination of this LGIA, which coverage may be in the form of tail coverage or extended reporting period coverage if agreed by the Parties.

18.3.8 The requirements contained herein as to the types and limits of all insurance to be maintained by the Parties are not intended to and shall not in any manner, limit or qualify the liabilities and obligations assumed by the Parties under this LGIA.

18.3.9 Within ten (10) Calendar Days following execution of this LGIA, and as soon as practicable after the end of each fiscal year or at the renewal of the insurance policy and in any event within ninety (90) Calendar Days thereafter, each Party shall provide certification of all insurance required in this LGIA, executed by each insurer or by an authorized representative of each insurer.

18.3.10 Notwithstanding the foregoing, each Party may self-insure to meet the minimum insurance requirements of Articles 18.3.2 through 18.3.8 to the extent it maintains a self-insurance program; provided that, such Party's senior secured debt is rated at investment grade or better by Standard & Poor's and that its self-insurance program meets the minimum insurance requirements of Articles 18.3.2 through 18.3.8. For any period of time that a Party's senior secured debt is unrated by Standard & Poor's or is rated at less than investment grade by Standard & Poor's, such Party shall comply with the insurance requirements applicable to it under Articles 18.3.2 through 18.3.9. In the event that a Party is permitted to self-insure pursuant to this article, it shall notify the other Party that it meets the requirements to self-insure and that its self-insurance program meets the minimum insurance requirements in a manner consistent with that specified in Article 18.3.9.

18.3.11 The Parties agree to report to each other in writing as soon as practical all accidents or occurrences resulting in injuries to any person, including death, and any property damage arising out of this LGIA.

Article 19. Assignment

19.1 Assignment. This LGIA may be assigned by either Party only with the written consent of the other; provided that either Party may assign this LGIA without the consent of the other Party to any Affiliate of the assigning Party with an equal or greater credit rating and with the legal authority and operational ability to satisfy the obligations of the assigning Party under this LGIA; and provided further that Interconnection Customer shall have the right to assign this LGIA, without the consent of Transmission Provider, for collateral security purposes to aid in providing financing for the Large Generating Facility, provided that Interconnection Customer will promptly notify Transmission Provider of any such assignment. Any financing arrangement entered into by Interconnection Customer pursuant to this article will provide that prior to or upon the exercise of the secured Party's, trustee's or mortgagee's assignment rights pursuant to said arrangement, the secured creditor, the trustee or mortgagee will notify Transmission Provider of the date and particulars of any such exercise of assignment right(s), including providing the Transmission Provider with proof that it meets the requirements of Articles 11.5 and 18.3. Any attempted assignment that violates this article is void and ineffective. Any assignment under this LGIA shall not relieve a Party of its obligations, nor shall a

Party's obligations be enlarged, in whole or in part, by reason thereof. Where required, consent to assignment will not be unreasonably withheld, conditioned or delayed.

Article 20. Severability

20.1 Severability. If any provision in this LGIA is finally determined to be invalid, void or unenforceable by any court or other Governmental Authority having jurisdiction, such determination shall not invalidate, void or make unenforceable any other provision, agreement or covenant of this LGIA; provided that if Interconnection Customer (or any third party, but only if such third party is not acting at the direction of Transmission Provider) seeks and obtains such a final determination with respect to any provision of the Alternate Option (Article 5.1.2), or the Negotiated Option (Article 5.1.4), then none of these provisions shall thereafter have any force or effect and the Parties' rights and obligations shall be governed solely by the Standard Option (Article 5.1.1).

Article 21. Comparability

21.1 Comparability. The Parties will comply with all applicable comparability and code of conduct laws, rules and regulations, as amended from time to time.

Article 22. Confidentiality

22.1 Confidentiality. Confidential Information shall include, without limitation, all information relating to a Party's technology, research and development, business affairs, and pricing, and any information supplied by either of the Parties to the other prior to the execution of this LGIA.

Information is Confidential Information only if it is clearly designated or marked in writing as confidential on the face of the document, or, if the information is conveyed orally or by inspection, if the Party providing the information orally informs the Party receiving the information that the information is confidential.

If requested by either Party, the other Party shall provide in writing, the basis for asserting that the information referred to in this Article 22 warrants confidential treatment, and the requesting Party may disclose such writing to the appropriate Governmental Authority. Each Party shall be responsible for the costs associated with affording confidential treatment to its information.

22.1.1 Term. During the term of this LGIA, and for a period of three (3) years after the expiration or termination of this LGIA, except as otherwise provided in this Article 22, each Party shall hold in confidence and shall not disclose to any person Confidential Information.

22.1.2 Scope. Confidential Information shall not include information that the receiving Party can demonstrate: (1) is generally available to the public other than as a result of a disclosure by the receiving Party; (2) was in the lawful possession of the receiving Party on a non-confidential basis before receiving it from the disclosing Party; (3) was supplied to the receiving Party without restriction by a third party, who, to the knowledge of the receiving Party after due inquiry, was under no obligation to the disclosing Party to keep such information confidential; (4) was independently developed by the receiving Party without reference to Confidential Information of the disclosing Party; (5) is, or becomes, publicly known, through no wrongful act or omission of the receiving Party or Breach of this LGIA; or (6) is required, in accordance with Article 22.1.7 of the LGIA, Order of Disclosure, to be disclosed by any Governmental Authority or is otherwise required to be disclosed by law or subpoena, or is necessary in any legal proceeding establishing rights and obligations under this LGIA. Information designated as Confidential Information will no longer be deemed confidential if the Party that designated the information as confidential notifies the other Party that it no longer is confidential.

22.1.3 Release of Confidential Information. Neither Party shall release or disclose Confidential Information to any other person, except to its Affiliates (limited by the Standards of Conduct requirements), subcontractors, employees, consultants, or to parties who may be or considering providing financing to or equity participation with Interconnection Customer, or to potential purchasers or assignees of Interconnection Customer, on a need-to-know basis in connection with this LGIA, unless such person has first been advised of the confidentiality provisions of this Article 22 and has agreed to comply with such provisions. Notwithstanding the foregoing, a Party providing Confidential Information to any person shall remain primarily responsible for any release of Confidential Information in contravention of this Article 22.

22.1.4 Rights. Each Party retains all rights, title, and interest in the Confidential Information that each Party discloses to the other Party. The disclosure by each Party to the other Party of Confidential Information shall not be deemed a waiver by either Party or any other person or entity of the right to protect the Confidential Information from public disclosure.

22.1.5 No Warranties. By providing Confidential Information, neither Party makes any warranties or representations as to its accuracy or completeness. In addition, by supplying Confidential Information, neither Party obligates itself to provide any particular information or Confidential Information to the other Party nor to enter into any further agreements or proceed with any other relationship or joint venture.

22.1.6 Standard of Care. Each Party shall use at least the same standard of care to protect Confidential Information it receives as it uses to protect its own Confidential Information from unauthorized disclosure, publication or

dissemination. Each Party may use Confidential Information solely to fulfill its obligations to the other Party under this LGIA or its regulatory requirements.

22.1.7 Order of Disclosure. If a court or a Government Authority or entity with the right, power, and apparent authority to do so requests or requires either Party, by subpoena, oral deposition, interrogatories, requests for production of documents, administrative order, or otherwise, to disclose Confidential Information, that Party shall provide the other Party with prompt notice of such request(s) or requirement(s) so that the other Party may seek an appropriate protective order or waive compliance with the terms of this LGIA. Notwithstanding the absence of a protective order or waiver, the Party may disclose such Confidential Information which, in the opinion of its counsel, the Party is legally compelled to disclose. Each Party will use Reasonable Efforts to obtain reliable assurance that confidential treatment will be accorded any Confidential Information so furnished.

22.1.8 Termination of Agreement. Upon termination of this LGIA for any reason, each Party shall, within ten (10) Calendar Days of receipt of a written request from the other Party, use Reasonable Efforts to destroy, erase, or delete (with such destruction, erasure, and deletion certified in writing to the other Party) or return to the other Party, without retaining copies thereof, any and all written or electronic Confidential Information received from the other Party.

22.1.9 Remedies. The Parties agree that monetary damages would be inadequate to compensate a Party for the other Party's Breach of its obligations under this Article 22. Each Party accordingly agrees that the other Party shall be entitled to equitable relief, by way of injunction or otherwise, if the first Party Breaches or threatens to Breach its obligations under this Article 22, which equitable relief shall be granted without bond or proof of damages, and the receiving Party shall not plead in defense that there would be an adequate remedy at law. Such remedy shall not be deemed an exclusive remedy for the Breach of this Article 22, but shall be in addition to all other remedies available at law or in equity. The Parties further acknowledge and agree that the covenants contained herein are necessary for the protection of legitimate business interests and are reasonable in scope. No Party, however, shall be liable for indirect, incidental, or consequential or punitive damages of any nature or kind resulting from or arising in connection with this Article 22.

22.1.10 Disclosure to FERC, its Staff, or a State. Notwithstanding anything in this Article 22 to the contrary, and pursuant to 18 CFR section 1b.20, if FERC or its staff, during the course of an investigation or otherwise, requests information from one of the Parties that is otherwise required to be maintained in confidence pursuant to this LGIA, the Party shall provide the requested information to FERC or its staff, within the time provided for in the request for information. In providing the information to FERC or its staff, the Party must, consistent with 18 CFR section 388.112, request that the information be treated as confidential and

non-public by FERC and its staff and that the information be withheld from public disclosure. Parties are prohibited from notifying the other Party to this LGIA prior to the release of the Confidential Information to FERC or its staff. The Party shall notify the other Party to the LGIA when it is notified by FERC or its staff that a request to release Confidential Information has been received by FERC, at which time either of the Parties may respond before such information would be made public, pursuant to 18 CFR section 388.112. Requests from a state regulatory body conducting a confidential investigation shall be treated in a similar manner if consistent with the applicable state rules and regulations.

22.1.11 Subject to the exception in Article 22.1.10, any information that a Party claims is competitively sensitive, commercial or financial information under this LGIA ("Confidential Information") shall not be disclosed by the other Party to any person not employed or retained by the other Party, except to the extent disclosure is (i) required by law; (ii) reasonably deemed by the disclosing Party to be required to be disclosed in connection with a dispute between or among the Parties, or the defense of litigation or dispute; (iii) otherwise permitted by consent of the other Party, such consent not to be unreasonably withheld; or (iv) necessary to fulfill its obligations under this LGIA or as a transmission service provider or a Control Area operator including disclosing the Confidential Information to an RTO or ISO or to a regional or national reliability organization. The Party asserting confidentiality shall notify the other Party in writing of the information it claims is confidential. Prior to any disclosures of the other Party's Confidential Information under this subparagraph, or if any third party or Governmental Authority makes any request or demand for any of the information described in this subparagraph, the disclosing Party agrees to promptly notify the other Party in writing and agrees to assert confidentiality and cooperate with the other Party in seeking to protect the Confidential Information from public disclosure by confidentiality agreement, protective order or other reasonable measures.

Article 23. Environmental Releases

23.1 Each Party shall notify the other Party, first orally and then in writing, of the release of any Hazardous Substances, any asbestos or lead abatement activities, or any type of remediation activities related to the Large Generating Facility or the Interconnection Facilities, each of which may reasonably be expected to affect the other Party. The notifying Party shall: (i) provide the notice as soon as practicable, provided such Party makes a good faith effort to provide the notice no later than twenty-four hours after such Party becomes aware of the occurrence; and (ii) promptly furnish to the other Party copies of any publicly available reports filed with any Governmental Authorities addressing such events.

Article 24. Information Requirements

24.1 Information Acquisition. Transmission Provider and Interconnection Customer shall submit specific information regarding the electrical characteristics of their respective facilities to each other as described below and in accordance with Applicable Reliability Standards.

24.2 Information Submission by Transmission Provider. The initial information submission by Transmission Provider shall occur no later than one hundred eighty (180) Calendar Days prior to Trial Operation and shall include Transmission System information necessary to allow Interconnection Customer to select equipment and meet any system protection and stability requirements, unless otherwise agreed to by the Parties. On a monthly basis Transmission Provider shall provide Interconnection Customer a status report on the construction and installation of Transmission Provider's Interconnection Facilities and Network Upgrades, including, but not limited to, the following information: (1) progress to date; (2) a description of the activities since the last report; (3) a description of the action items for the next period; and (4) the delivery status of equipment ordered.

24.3 Updated Information Submission by Interconnection Customer. The updated information submission by Interconnection Customer, including manufacturer information, shall occur no later than one hundred eighty (180) Calendar Days prior to the Trial Operation. Interconnection Customer shall submit a completed copy of the Large Generating Facility data requirements contained in Appendix 3 to the LGIP. It shall also include any additional information provided to Transmission Provider for the Feasibility Study, Serial Interconnection System Impact Study, Definitive Interconnection System Impact Study, and Interconnection Facilities Study. Information in this submission shall be the most current Large Generating Facility design or expected performance data. Information submitted for stability models shall be compatible with Transmission Provider standard models. If there is no compatible model, Interconnection Customer will work with a consultant mutually agreed to by the Parties to develop and supply a standard model and associated information.

If Interconnection Customer's data is materially different from what was originally provided to Transmission Provider pursuant to the Interconnection Study Agreement between Transmission Provider and Interconnection Customer, then Transmission Provider will conduct appropriate studies to determine the impact on Transmission Provider Transmission System based on the actual data submitted pursuant to this Article 24.3. The Interconnection Customer shall not begin Trial Operation until such studies are completed.

24.4 Information Supplementation. Prior to the Operation Date, the Parties shall supplement their information submissions described above in this Article 24 with any and all "as-built" Large Generating Facility information or "as-tested" performance information that differs from the initial submissions or, alternatively, written confirmation that no such differences exist. The Interconnection Customer shall conduct tests on the Large Generating Facility as required by Good Utility Practice such as an

open circuit "step voltage" test on the Large Generating Facility to verify proper operation of the Large Generating Facility's automatic voltage regulator.

Unless otherwise agreed, the test conditions shall include: (1) Large Generating Facility at synchronous speed; (2) automatic voltage regulator on and in voltage control mode; and (3) a five percent change in Large Generating Facility terminal voltage initiated by a change in the voltage regulators reference voltage. Interconnection Customer shall provide validated test recordings showing the responses of Large Generating Facility terminal and field voltages. In the event that direct recordings of these voltages is impractical, recordings of other voltages or currents that mirror the response of the Large Generating Facility's terminal or field voltage are acceptable if information necessary to translate these alternate quantities to actual Large Generating Facility terminal or field voltages is provided. Large Generating Facility testing shall be conducted and results provided to Transmission Provider for each individual generating unit in a station.

Subsequent to the Operation Date, Interconnection Customer shall provide Transmission Provider any information changes due to equipment replacement, repair, or adjustment. Transmission Provider shall provide Interconnection Customer any information changes due to equipment replacement, repair or adjustment in the directly connected substation or any adjacent Transmission Provider-owned substation that may affect Interconnection Customer's Interconnection Facilities equipment ratings, protection or operating requirements. The Parties shall provide such information no later than thirty (30) Calendar Days after the date of the equipment replacement, repair or adjustment.

Article 25. Information Access and Audit Rights

25.1 Information Access. Each Party (the "disclosing Party") shall make available to the other Party information that is in the possession of the disclosing Party and is necessary in order for the other Party to: (i) verify the costs incurred by the disclosing Party for which the other Party is responsible under this LGIA; and (ii) carry out its obligations and responsibilities under this LGIA. The Parties shall not use such information for purposes other than those set forth in this Article 25.1 and to enforce their rights under this LGIA.

25.2 Reporting of Non-Force Majeure Events. Each Party (the "notifying Party") shall notify the other Party when the notifying Party becomes aware of its inability to comply with the provisions of this LGIA for a reason other than a Force Majeure event. The Parties agree to cooperate with each other and provide necessary information regarding such inability to comply, including the date, duration, reason for the inability to comply, and corrective actions taken or planned to be taken with respect to such inability to comply. Notwithstanding the foregoing, notification, cooperation or information provided under this article shall not entitle the Party receiving such notification to allege a cause for anticipatory breach of this LGIA.

25.3 Audit Rights. Subject to the requirements of confidentiality under Article 22 of this LGIA, each Party shall have the right, during normal business hours, and upon prior reasonable notice to the other Party, to audit at its own expense the other Party's accounts and records pertaining to either Party's performance or either Party's satisfaction of obligations under this LGIA. Such audit rights shall include audits of the other Party's costs, calculation of invoiced amounts, Transmission Provider's efforts to allocate responsibility for the provision of reactive support to the Transmission System, Transmission Provider's efforts to allocate responsibility for interruption or reduction of generation on the Transmission System, and each Party's actions in an Emergency Condition. Any audit authorized by this article shall be performed at the offices where such accounts and records are maintained and shall be limited to those portions of such accounts and records that relate to each Party's performance and satisfaction of obligations under this LGIA. Each Party shall keep such accounts and records for a period equivalent to the audit rights periods described in Article 25.4.

25.4 Audit Rights Periods.

25.4.1 Audit Rights Period for Construction-Related Accounts and Records. Accounts and records related to the design, engineering, procurement, and construction of Transmission Provider's Interconnection Facilities and Network Upgrades shall be subject to audit for a period of twenty-four months following Transmission Provider's issuance of a final invoice in accordance with Article 12.2.

25.4.2 Audit Rights Period for All Other Accounts and Records. Accounts and records related to either Party's performance or satisfaction of all obligations under this LGIA other than those described in Article 25.4.1 shall be subject to audit as follows: (i) for an audit relating to cost obligations, the applicable audit rights period shall be twenty-four months after the auditing Party's receipt of an invoice giving rise to such cost obligations; and (ii) for an audit relating to all other obligations, the applicable audit rights period shall be twenty-four months after the event for which the audit is sought.

25.5 Audit Results. If an audit by a Party determines that an overpayment or an underpayment has occurred, a notice of such overpayment or underpayment shall be given to the other Party together with those records from the audit which support such determination.

Article 26. Subcontractors

26.1 General. Nothing in this LGIA shall prevent a Party from utilizing the services of any subcontractor as it deems appropriate to perform its obligations under this LGIA; provided, however, that each Party shall require its subcontractors to comply with all applicable terms and conditions of this LGIA in providing such services and each Party shall remain primarily liable to the other Party for the performance of such subcontractor.

26.2 Responsibility of Principal. The creation of any subcontract relationship shall not relieve the hiring Party of any of its obligations under this LGIA. The hiring Party shall be fully responsible to the other Party for the acts or omissions of any subcontractor the hiring Party hires as if no subcontract had been made; provided, however, that in no event shall Transmission Provider be liable for the actions or inactions of Interconnection Customer or its subcontractors with respect to obligations of Interconnection Customer under Article 5 of this LGIA. Any applicable obligation imposed by this LGIA upon the hiring Party shall be equally binding upon, and shall be construed as having application to, any subcontractor of such Party.

26.3 No Limitation by Insurance. The obligations under this Article 26 will not be limited in any way by any limitation of subcontractor's insurance.

Article 27. Disputes

27.1 Submission. In the event either Party has a dispute, or asserts a claim, that arises out of or in connection with this LGIA or its performance, such Party (the "disputing Party") shall provide the other Party with written notice of the dispute or claim ("Notice of Dispute"). Such dispute or claim shall be referred to a designated senior representative of each Party for resolution on an informal basis as promptly as practicable after receipt of the Notice of Dispute by the other Party. In the event the designated representatives are unable to resolve the claim or dispute through unassisted or assisted negotiations within thirty (30) Calendar Days of the other Party's receipt of the Notice of Dispute, such claim or dispute may, upon mutual agreement of the Parties, be submitted to arbitration and resolved in accordance with the arbitration procedures set forth below. In the event the Parties do not agree to submit such claim or dispute to arbitration, each Party may exercise whatever rights and remedies it may have in equity or at law consistent with the terms of this LGIA.

27.2 External Arbitration Procedures. Any arbitration initiated under this LGIA shall be conducted before a single neutral arbitrator appointed by the Parties. If the Parties fail to agree upon a single arbitrator within ten (10) Calendar Days of the submission of the dispute to arbitration, each Party shall choose one arbitrator who shall sit on a three-member arbitration panel. The two arbitrators so chosen shall within twenty (20) Calendar Days select a third arbitrator to chair the arbitration panel. In either case, the arbitrators shall be knowledgeable in electric utility matters, including electric transmission and bulk power issues, and shall not have any current or past substantial business or financial relationships with any party to the arbitration (except prior arbitration). The arbitrator(s) shall provide each of the Parties an opportunity to be heard and, except as otherwise provided herein, shall conduct the arbitration in accordance with the Commercial Arbitration Rules of the American Arbitration Association ("Arbitration Rules") and any applicable FERC regulations or RTO rules; provided, however, in the event of a conflict between the Arbitration Rules and the terms of this Article 27, the terms of this Article 27 shall prevail.

27.3 Arbitration Decisions. Unless otherwise agreed by the Parties, the arbitrator(s) shall render a decision within ninety (90) Calendar Days of appointment and shall notify the Parties in writing of such decision and the reasons therefor. The arbitrator(s) shall be authorized only to interpret and apply the provisions of this LGIA and shall have no power to modify or change any provision of this Agreement in any manner. The decision of the arbitrator(s) shall be final and binding upon the Parties, and judgment on the award may be entered in any court having jurisdiction. The decision of the arbitrator(s) may be appealed solely on the grounds that the conduct of the arbitrator(s), or the decision itself, violated the standards set forth in the Federal Arbitration Act or the Administrative Dispute Resolution Act. The final decision of the arbitrator must also be filed with FERC if it affects jurisdictional rates, terms and conditions of service, Interconnection Facilities, or Network Upgrades.

27.4 Costs. Each Party shall be responsible for its own costs incurred during the arbitration process and for the following costs, if applicable: (1) the cost of the arbitrator chosen by the Party to sit on the three member panel and one half of the cost of the third arbitrator chosen; or (2) one half the cost of the single arbitrator jointly chosen by the Parties.

Article 28. Representations, Warranties, and Covenants

28.1 General. Each Party makes the following representations, warranties and covenants:

28.1.1 Good Standing. Such Party is duly organized, validly existing and in good standing under the laws of the state in which it is organized, formed, or incorporated, as applicable; that it is qualified to do business in the state or states in which the Large Generating Facility, Interconnection Facilities and Network Upgrades owned by such Party, as applicable, are located**;** and that it has the corporate power and authority to own its properties, to carry on its business as now being conducted and to enter into this LGIA and carry out the transactions contemplated hereby and perform and carry out all covenants and obligations on its part to be performed under and pursuant to this LGIA.

28.1.2 Authority. Such Party has the right, power and authority to enter into this LGIA, to become a Party hereto and to perform its obligations hereunder. This LGIA is a legal, valid and binding obligation of such Party, enforceable against such Party in accordance with its terms, except as the enforceability thereof may be limited by applicable bankruptcy, insolvency, reorganization or other similar laws affecting creditors' rights generally and by general equitable principles (regardless of whether enforceability is sought in a proceeding in equity or at law).

28.1.3 No Conflict. The execution, delivery and performance of this LGIA does not violate or conflict with the organizational or formation documents, or bylaws or operating agreement, of such Party, or any judgment, license, permit, order,

material agreement or instrument applicable to or binding upon such Party or any of its assets.

28.1.4 Consent and Approval. Such Party has sought or obtained, or, in accordance with this LGIA will seek or obtain, each consent, approval, authorization, order, or acceptance by any Governmental Authority in connection with the execution, delivery and performance of this LGIA, and it will provide to any Governmental Authority notice of any actions under this LGIA that are required by Applicable Laws and Regulations.

Article 29. Joint Operating Committee

29.1 Joint Operating Committee. Except in the case of ISOs and RTOs, Transmission Provider shall constitute a Joint Operating Committee to coordinate operating and technical considerations of Interconnection Service. At least six (6) months prior to the expected Initial Synchronization Date, Interconnection Customer and Transmission Provider shall each appoint one representative and one alternate to the Joint Operating Committee. Each Interconnection Customer shall notify Transmission Provider of its appointment in writing. Such appointments may be changed at any time by similar notice. The Joint Operating Committee shall meet as necessary, but not less than once each calendar year, to carry out the duties set forth herein. The Joint Operating Committee shall hold a meeting at the request of either Party, at a time and place agreed upon by the representatives. The Joint Operating Committee shall perform all of its duties consistent with the provisions of this LGIA. Each Party shall cooperate in providing to the Joint Operating Committee all information required in the performance of the Joint Operating Committee's duties. All decisions and agreements, if any, made by the Joint Operating Committee, shall be evidenced in writing. The duties of the Joint Operating Committee shall include the following:

29.1.1 Establish data requirements and operating record requirements.

29.1.2 Review the requirements, standards, and procedures for data acquisition equipment, protective equipment, and any other equipment or software.

29.1.3 Annually review the one (1) year forecast of maintenance and planned outage schedules of Transmission Provider's and Interconnection Customer's facilities at the Point of Interconnection.

29.1.4 Coordinate the scheduling of maintenance and planned outages on the Interconnection Facilities, the Large Generating Facility and other facilities that impact the normal operation of the interconnection of the Large Generating Facility to the Transmission System.

29.1.5 Ensure that information is being provided by each Party regarding equipment availability.

29.1.6 Perform such other duties as may be conferred upon it by mutual agreement of the Parties.

Article 30. Miscellaneous

30.1 Binding Effect. This LGIA and the rights and obligations hereof, shall be binding upon and shall inure to the benefit of the successors and assigns of the Parties hereto.

30.2 Conflicts. In the event of a conflict between the body of this LGIA and any attachment, appendices or exhibits hereto, the terms and provisions of the body of this LGIA shall prevail and be deemed the final intent of the Parties.

30.3 Rules of Interpretation. This LGIA, unless a clear contrary intention appears, shall be construed and interpreted as follows: (1) the singular number includes the plural number and vice versa; (2) reference to any person includes such person's successors and assigns but, in the case of a Party, only if such successors and assigns are permitted by this LGIA, and reference to a person in a particular capacity excludes such person in any other capacity or individually; (3) reference to any agreement (including this LGIA), document, instrument or tariff means such agreement, document, instrument, or tariff as amended or modified and in effect from time to time in accordance with the terms thereof and, if applicable, the terms hereof; (4) reference to any Applicable Laws and Regulations means such Applicable Laws and Regulations as amended, modified, codified, or reenacted, in whole or in part, and in effect from time to time, including, if applicable, rules and regulations promulgated thereunder; (5) unless expressly stated otherwise, reference to any Article, Section or Appendix means such Article of this LGIA or such Appendix to this LGIA, or such Section to the LGIP or such Appendix to the LGIP, as the case may be; (6) "hereunder", "hereof", "herein", "hereto" and words of similar import shall be deemed references to this LGIA as a whole and not to any particular Article or other provision hereof or thereof; (7) "including" (and with correlative meaning "include") means including without limiting the generality of any description preceding such term; and (8) relative to the determination of any period of time, "from" means "from and including", "to" means "to but excluding" and "through" means "through and including".

30.4 Entire Agreement. This LGIA, including all Appendices and Schedules attached hereto, constitutes the entire agreement between the Parties with reference to the subject matter hereof, and supersedes all prior and contemporaneous understandings or agreements, oral or written, between the Parties with respect to the subject matter of this LGIA. There are no other agreements, representations, warranties, or covenants which constitute any part of the consideration for, or any condition to, either Party's compliance with its obligations under this LGIA.

30.5 No Third Party Beneficiaries. This LGIA is not intended to and does not create rights, remedies, or benefits of any character whatsoever in favor of any persons, corporations, associations, or entities other than the Parties, and the obligations herein assumed are solely for the use and benefit of the Parties, their successors in interest and, where permitted, their assigns.

30.6 Waiver. The failure of a Party to this LGIA to insist, on any occasion, upon strict performance of any provision of this LGIA will not be considered a waiver of any obligation, right, or duty of, or imposed upon, such Party.

Any waiver at any time by either Party of its rights with respect to this LGIA shall not be deemed a continuing waiver or a waiver with respect to any other failure to comply with any other obligation, right, duty of this LGIA. Termination or Default of this LGIA for any reason by Interconnection Customer shall not constitute a waiver of Interconnection Customer's legal rights to obtain an interconnection from Transmission Provider. Any waiver of this LGIA shall, if requested, be provided in writing.

30.7 Headings. The descriptive headings of the various Articles of this LGIA have been inserted for convenience of reference only and are of no significance in the interpretation or construction of this LGIA.

30.8 Multiple Counterparts. This LGIA may be executed in two or more counterparts, each of which is deemed an original but all constitute one and the same instrument.

30.9 Amendment. The Parties may by mutual agreement amend this LGIA by a written instrument duly executed by the Parties.

30.10 Modification by the Parties. The Parties may by mutual agreement amend the Appendices to this LGIA by a written instrument duly executed by the Parties. Such amendment shall become effective and a part of this LGIA upon satisfaction of all Applicable Laws and Regulations.

30.11 Reservation of Rights. Transmission Provider shall have the right to make a unilateral filing with FERC to modify this LGIA with respect to any rates, terms and conditions, charges, classifications of service, rule or regulation under section 205 or any other applicable provision of the Federal Power Act and FERC's rules and regulations thereunder, and Interconnection Customer shall have the right to make a unilateral filing with FERC to modify this LGIA pursuant to section 206 or any other applicable provision of the Federal Power Act and FERC's rules and regulations thereunder; provided that each Party shall have the right to protest any such filing by the other Party and to participate fully in any proceeding before FERC in which such modifications may be considered. Nothing in this LGIA shall limit the rights of the Parties or of FERC under sections 205 or 206 of the Federal Power Act and FERC's rules and regulations thereunder, except to the extent that the Parties otherwise mutually agree as provided herein.

30.12 No Partnership. This LGIA shall not be interpreted or construed to create an association, joint venture, agency relationship, or partnership between the Parties or to impose any partnership obligation or partnership liability upon either Party. Neither Party shall have any right, power or authority to enter into any agreement or undertaking for, or act on behalf of, or to act as or be an agent or representative of, or to otherwise bind, the other Party.

IN WITNESS WHEREOF, the Parties have executed this LGIA in duplicate originals, each of which shall constitute and be an original effective Agreement between the Parties.

[Insert name of Transmission Provider or Transmission Owner, if applicable]

By: _____ By: _____

Title: _____ Title: _____

Date: _____ Date: _____

[Insert name of Interconnection Customer]

By: _____

Title: _____

Date: _____

Appendix A to LGIA

Interconnection Facilities, Network Upgrades and Distribution Upgrades

1. Interconnection Facilities:

(a) [insert Interconnection Customer's Interconnection Facilities]:

(b) [insert Transmission Provider's Interconnection Facilities]:

2. Network Upgrades:

(a) [insert Stand Alone Network Upgrades]:

(b) [insert Other Network Upgrades]:

3. Distribution Upgrades:

Appendix B to LGIA

Milestones

Appendix C to LGIA

Interconnection Details

Appendix D to LGIA

Security Arrangements Details

Infrastructure security of Transmission System equipment and operations and control hardware and software is essential to ensure day-to-day Transmission System reliability and operational security. FERC will expect all Transmission Providers, market participants, and Interconnection Customers interconnected to the Transmission System to comply with the recommendations offered by the President's Critical Infrastructure Protection Board and, eventually, best practice recommendations from the electric reliability authority. All public utilities will be expected to meet basic standards for system infrastructure and operational security, including physical, operational, and cyber-security practices.

Appendix E to LGIA

Commercial Operation Date

This Appendix E is a part of the LGIA between Transmission Provider and Interconnection Customer.

[Date]

[Transmission Provider Address]

Re: _____ Large Generating Facility

Dear _____:

On **[Date] [Interconnection Customer]** has completed Trial Operation of Unit No. ___. This letter confirms that [Interconnection Customer] commenced Commercial Operation of Unit No. ___ at the Large Generating Facility, effective as of **[Date plus one day]**.

Thank you.

[Signature]

[Interconnection Customer Representative]

Appendix F to LGIA

Addresses for Delivery of Notices and Billings

Notices:.

Transmission Provider:

[To be supplied.]

Interconnection Customer:

[To be supplied.]

Billings and Payments:

Transmission Provider:

[To be supplied.]

Interconnection Customer:

[To be supplied.]

Alternative Forms of Delivery of Notices (telephone, facsimile or email):

Transmission Provider:

[To be supplied.]

Interconnection Customer:

[To be supplied.]

Appendix G to LGIA

Interconnection Requirements For A Wind Generating Plant

Appendix G sets forth requirements and provisions specific to a wind generating plant. All other requirements of this LGIA continue to apply to wind generating plant interconnections.

A. Technical Standards Applicable to a Wind Generating Plant

i. Low Voltage Ride-Through (LVRT) Capability

A wind generating plant shall be able to remain online during voltage disturbances up to the time periods and associated voltage levels set forth in the standard below. The LVRT standard provides for a transition period standard and a post-transition period standard.

Transition Period LVRT Standard

The transition period standard applies to wind generating plants subject to FERC Order 661 that have either: (i) interconnection agreements signed and filed with the Commission, filed with the Commission in unexecuted form, or filed with the Commission as non-conforming agreements between January 1, 2006 and December 31, 2006, with a scheduled in-service date no later than December 31, 2007, or (ii) wind
generating turbines subject to a wind turbine procurement contract executed prior to December 31, 2005, for delivery through 2007.

1. Wind generating plants are required to remain in-service during three-phase faults with normal clearing (which is a time period of approximately 4 – 9 cycles) and single line to ground faults with delayed clearing, and subsequent post-fault voltage recovery to prefault voltage unless clearing the fault effectively disconnects the generator from the system. The clearing time requirement for a three-phase fault will be specific to the wind generating plant substation location, as determined by and documented by the

transmission provider. The maximum clearing time the wind generating plant shall be required to withstand for a three-phase fault shall be 9 cycles at a voltage as low as 0.15 p.u., as measured at the high side of the wind generating plant step-up transformer (i.e. the transformer that steps the voltage up to the transmission interconnection voltage or "GSU"), after which, if the fault remains following the location-specific normal clearing time for three-phase faults, the wind generating plant may disconnect from the transmission system.

2. This requirement does not apply to faults that would occur between the wind generator terminals and the high side of the GSU or to faults that would result in a voltage lower than 0.15 per unit on the high side of the GSU serving the facility.

3. Wind generating plants may be tripped after the fault period if this action is intended as part of a special protection system.

4. Wind generating plants may meet the LVRT requirements of this standard by the performance of the generators or by installing additional equipment (e.g., Static VAr Compensator, etc.) within the wind generating plant or by a combination of generator performance and additional equipment.

5. Existing individual generator units that are, or have been, interconnected to the network at the same location at the effective date of the Appendix G LVRT

   Standard are exempt from meeting the Appendix G LVRT Standard for the remaining life of the existing generation equipment. Existing individual generator units that are replaced are required to meet the Appendix G LVRT Standard.

Post-transition Period LVRT Standard

All wind generating plants subject to FERC Order No. 661 and not covered by the transition period described above must meet the following requirements:

1. Wind generating plants are required to remain in-service during three-phase faults with normal clearing (which is a time period of approximately 4 – 9 cycles) and single line to ground faults with delayed clearing, and subsequent post-fault voltage recovery to prefault voltage unless clearing the fault effectively disconnects the generator from the system. The clearing time requirement for a three-phase fault will be specific to the wind generating plant substation location, as determined by and documented by the transmission provider. The maximum clearing time the wind generating plant shall be required to withstand for a three-phase fault shall be 9 cycles after which, if the fault remains following the location-specific normal clearing time for three-phase faults, the wind generating plant may disconnect from the transmission system. A wind generating plant shall remain interconnected during such a fault on the transmission system for a voltage level as low as zero volts, as measured at the high voltage side of the wind GSU.
2. This requirement does not apply to faults that would occur between the wind generator terminals and the high side of the GSU.
3. Wind generating plants may be tripped after the fault period if this action is intended as part of a special protection system.
4. Wind generating plants may meet the LVRT requirements of this standard by the performance of the generators or by installing additional equipment (e.g., Static VAr Compensator) within the wind generating plant or by a combination of generator performance and additional equipment.

5. Existing individual generator units that are, or have been, interconnected to the network at the same location at the effective date of the Appendix G LVRT Standard are exempt from meeting the Appendix G LVRT Standard for the remaining life of the existing generation equipment. Existing individual generator units that are replaced are required to meet the Appendix G LVRT Standard.

ii. Power Factor Design Criteria (Reactive Power)

The following reactive power requirements apply only to a newly interconnecting wind generating plant that has executed a Facilities Study Agreement as of the effective date of the Final Rule establishing the reactive power requirements for non-synchronous generators in section 9.6.1 of this LGIA (Order No. 827). A wind generating plant to which this provision applies shall maintain a power factor within the range of 0.95 leading to 0.95 lagging, measured at the Point of Interconnection as defined in this LGIA, if the Transmission Provider's System Impact Study shows that such a requirement is necessary to ensure safety or reliability. The power factor range standard can be met by using, for example, power electronics designed to supply this level of reactive capability (taking into account any limitations due to voltage level, real power output, etc.) or fixed and switched capacitors if agreed to by the Transmission Provider, or a combination of the two. The Interconnection Customer shall not disable power factor equipment while the wind plant is in operation. Wind plants shall also be able to provide sufficient dynamic voltage support in lieu of the power system stabilizer and automatic voltage regulation at the generator excitation system if the System Impact Study shows this to be required for system safety or reliability.

iii. Supervisory Control and Data Acquisition (SCADA) Capability

The wind plant shall provide SCADA capability to transmit data and receive instructions from the Transmission Provider to protect system reliability. The Transmission Provider and the wind plant Interconnection Customer shall determine what SCADA information is essential for the proposed wind plant, taking into account the size of the plant and its characteristics, location, and importance in maintaining generation resource adequacy and transmission system reliability in its area.

APPENDIX 11 TO LGIP

Interconnection Procedures For A Wind Generating Plant

This Appendix 11 sets forth procedures specific to a wind generating plant. All other requirements of this LGIP continue to apply to wind generating plant interconnections.

A. Special Procedures Applicable to Wind Generators

The wind plant Interconnection Customer, in completing the Interconnection Request required by Section 4.4 of this LGIP, may provide to the Transmission Provider a set of preliminary electrical design specifications depicting the wind plant as a single equivalent generator. Upon satisfying these and other applicable Interconnection Request conditions, the wind plant may enter the queue and receive the base case data as provided for in this LGIP.

No later than six months after submitting an Interconnection Request completed in this manner, the wind plant Interconnection Customer must submit completed detailed electrical design specifications and other data (including collector system layout data) needed to allow the Transmission Provider to complete the System Impact Study.

ATTACHMENT K

STANDARD LARGE GENERATOR INTERCONNECTION PROCEDURES (LGIP)

including

STANDARD LARGE GENERATOR

INTERCONNECTION AGREEMENT (LGIA)

(DEC Zone and DEP Zone)

TABLE OF CONTENTS

Page

SECTION 1. DEFINITIONS 1

SECTION 2. SCOPE AND APPLICATION 11

2.1 Application of Standard Large Generator Interconnection Procedures. 11

2.2 Comparability. 12

2.3 Base Case Data. 12

2.4 No Applicability to Transmission Service. 13

SECTION 3. DEFINITIVE INTERCONNECTION STUDY PROCESS- INFORMATIONAL INTERCONNECTION STUDY. 13

3.1 Informational Interconnection Study Agreement. 13

3.2 Scope of Informational Interconnection Study. 13

3.3 Informational Interconnection Study Procedures. 14

SECTION 4. INTERCONNECTION REQUESTS 14

4.1 General. 14

4.1.1 Serial Interconnection Study Deposit and Process. 14

4.1.2 Definitive Interconnection Study Deposit and Process. 15

4.2 Identification of Types of Interconnection Services 16

4.2.1 Serial Interconnection Study Process 16

4.2.2 Definitive Interconnection Study Process 16

4.2.3 Energy Resource Interconnection Service. 16

4.2.3.1 The Product. 16

4.2.3.2 The Study. 16

4.2.4 Network Resource Interconnection Service. 17

4.2.4.1 The Product. 17

4.2.4.2 The Study. 17

4.3 Utilization of Surplus Interconnection Service. 17

4.3.1 Surplus Interconnection Service Requests. 17

4.3.2 Process for Surplus Interconnection Service Requests 18

4.4 Valid Interconnection Request. 19

4.4.1 Initiating an Interconnection Request in the Serial Interconnection Study Process 19

4.4.2 Initiating an Interconnection Request in the Definitive Interconnection Study Process 20

4.4.3 Acknowledgment of Interconnection Request. 21

4.4.4 Deficiencies in Interconnection Request Under the Serial Interconnection Study Process 21
4.4.5 Deficiencies in Interconnection Request Under the Definitive Interconnection Study Process 21
4.4.6 Scoping Meeting for Serial Interconnection Study Process. 22
4.4.7 Scoping Meeting for Definitive Interconnection Study Process. 22
4.5 OASIS Posting. 23
4.5.1 Requirement to Post Interconnection Study Metrics. 24
4.5.2 Serial Interconnection Study Processing Metrics. 24
4.5.2.1 Feasibility Studies Processing Time. 24
4.5.2.2 Serial Interconnection System Impact Studies Processing Time. 24
4.5.3 Definitive Interconnection Study Processing Metrics. 25
4.5.3.1 Definitive Interconnection Study Phase 1 Processing Time. 25
4.5.3.2 Definitive Interconnection Study Phase 2 Processing Time. 25
4.5.3.3 Definitive Interconnection Study Phase 3 Processing Time. 25
4.5.4 Interconnection Facilities Studies Processing Time. 25
4.5.5 Interconnection Service Requests Withdrawn From Interconnection Queue. 26
4.5.6 Requirement to Post Interconnection Study Metrics. 27
4.5.7 Reporting Requirement for Late Studies. 27
4.6 Coordination with Affected Systems. 27
4.7 Withdrawal. 28
4.7.1 Definitive Interconnection Study Process – Withdrawal Penalty. 28
4.7.1.1 Calculation of the Withdrawal Penalty. 29
4.7.1.2 Distribution of the Withdrawal Penalty. 30
4.8 Identification of Contingent Facilities. 30
4.8.1 Method for Identifying Contingent Facilities 30
4.8.2 Estimates Available for Contingent Facilities 32
4.8.3 Inclusion of Contingent Facilities in LGIA 32

4.9 Additional Requirements for Generation Replacement Requests

SECTION 5. QUEUE POSITION AND QUEUE PROCESSING 35
5.1 Serial Interconnection Study Process Queue Position 35
5.1.1 Serial Interconnection Study Process – Clustering 36
5.2 Definitive Interconnection Study Process Queue Position 36
5.3 Transferability of Queue Position. 37

5.4 Modifications. 37
5.4.1 Material Modifications prior to System Impact Study Agreement Execution 37
5.4.2 Material Modifications prior to Facilities Study Agreement Execution 38
5.4.3 Modification Inquiry Process. 38
5.4.4 Receipt of Request for Modification. 39
5.4.5 Commercial Operation Date 39
5.4.6 Technological Change Procedure. 39
5.4.6.1 Technological Change Request. 39
SECTION 6. PROCEDURES FOR INTERCONNECTION REQUESTS SUBMITTED PRIOR TO EFFECTIVE DATE OF STANDARD LARGE GENERATOR INTERCONNECTION PROCEDURES 40
6.1 Queue Position for Pending Requests. 40
6.2 New Transmission Provider. 41
SECTION 7. TRANSITION PROCEDURES FOR DEFINITIVE INTERCONNECTION STUDY PROCESS. 41
7.1 Transitional Serial Process. 41
7.2 Transitional Cluster Process. 43
7.2.1 Transitional Cluster Eligibility Requirements 43
7.2.2 Transitional Cluster Expedited Customer Engagement Process and Phase 1 44
7.2.3 Transitional Cluster Study Phase 2 45
7.2.4 Transitional Cluster Facilities Study 46
7.2.5 Transitional Cluster LGIA 47
7.2.6 Transitional Cluster Withdrawal Penalty 47
SECTION 8. SERIAL INTERCONNECTION FEASIBILITY STUDY 47
8.1 Serial Interconnection Feasibility Study Agreement. 47
8.2 Scope of Serial Interconnection Feasibility Study. 48
8.3 Serial Interconnection Feasibility Study Procedures. 49
8.3.1 Meeting with Transmission Provider. 49
8.4 Re-Study. 49
SECTION 9. SERIAL INTERCONNECTION SYSTEM IMPACT STUDY 49
9.1 Serial Interconnection System Impact Study Agreement. 49
9.2 Execution of Serial Interconnection System Impact Study Agreement. 50
9.3 Scope of Serial Interconnection System Impact Study. 50
9.4 Serial Interconnection System Impact Study Procedures 51
9.5 Meeting with Transmission Provider. 51
9.6 Re-Study. 51

SECTION 10. DEFINITIVE INTERCONNECTION STUDY PROCESS 51
10.1 Initiation of a Definitive Interconnection System Impact Study Cluster. 52
10.2 Initiation of a Resource Solicitation Cluster. 52
10.3 Definitive Interconnection Study Process Study Cost Allocation. 53
10.4 Transmission Provider's Interconnection Facilities and Network Upgrade Cost Allocation. 54
10.5 Definitive Interconnection System Impact Study Agreement. 55
10.6 Execution of Definitive Interconnection System Impact Study Agreement. 55
10.7 Scope of Definitive Interconnection System Impact Study. 55
10.8 Definitive Interconnection System Impact Study Procedures. 56
10.9 Post-DISIS Report Meeting. 59
10.10 Re-Study. 59
10.11 Readiness Milestones. 59
10.11.1 Readiness Milestone 1 ("M1"). 60
10.11.2 Readiness Milestone 2 ("M2"). 60
10.11.3 Readiness Milestone 3 ("M3"). 60
10.11.4 Readiness Milestone 4 ("M4"). 61
10.11.5 Readiness Milestone 5 ("M5"). 61
10.11.6 Security Requirements. 62
SECTION 11. INTERCONNECTION FACILITIES STUDY 63
11.1 Serial Interconnection Study Process- Interconnection Facilities Study Agreement. 63
11.2 Definitive Interconnection Study Process – Facilities Study Agreement 63
11.3 Scope of Interconnection Facilities Study. 64
11.4 Interconnection Facilities Study Procedures. 64
11.5 Meeting with Transmission Provider. 65
11.6 Serial Interconnection Study Process Facilities Study Re-Study. 65
11.7 Definitive Interconnection Study Process Facilities Study Re-Study 65
SECTION 12. ENGINEERING & PROCUREMENT ("E&P") AGREEMENT. 65
SECTION 13. SERIAL INTERCONNECTION STUDY PROCESS- OPTIONAL INTERCONNECTION STUDY 66
13.1 Optional Interconnection Study Agreement. 66
13.2 Scope of Optional Interconnection Study. 66
13.3 Optional Interconnection Study Procedures. 67
SECTION 14. STANDARD LARGE GENERATOR INTERCONNECTION AGREEMENT (LGIA) 67
14.1 Tender. 67

14.2 Negotiation. 67
14.3 Serial Interconnection Study Process – Execution and Filing. 68
14.4 Definitive Interconnection Study Process – Execution and Filing. 68
14.5 Commencement of Interconnection Activities. 69
SECTION 15. CONSTRUCTION OF TRANSMISSION PROVIDER'S INTERCONNECTION FACILITIES AND NETWORK UPGRADES 69
15.1 Schedule. 69
15.2 Construction Sequencing. 69
15.2.1 General. 69
15.2.2 Advance Construction of Network Upgrades That are an Obligation of an Entity Other Than Interconnection Customer. 69
15.2.3 Advancing Construction of Network Upgrades That are Part of an Expansion Plan of the Transmission Provider. 70
15.2.4 Amended Interconnection System Impact Study. 70
SECTION 16. MISCELLANEOUS 70
16.1 Confidentiality. 70
16.1.1 Scope. 71
16.1.2 Release of Confidential Information. 71
16.1.3 Rights. 71
16.1.4 No Warranties. 71
16.1.5 Standard of Care. 72
16.1.6 Order of Disclosure. 72
16.1.7 Remedies. 72
16.1.8 Disclosure to FERC, its Staff, or a State. 72
16.2 Delegation of Responsibility 73
16.3 Serial Interconnection Study Process – Obligation for Study Costs 73
16.4 Definitive Interconnection Study Process – Obligation for Study Costs and Withdrawal Penalty 73
16.5 Third Parties Conducting Studies. 74
16.6 Disputes 75
16.6.1 Submission. 75
16.6.2 External Arbitration Procedures. 75
16.6.3 Arbitration Decisions. 75
16.6.4 Costs. 76
16.7 Local Furnishing Bonds. 76

16.7.1 Transmission Providers That Own Facilities Financed by Local Furnishing Bonds. 76

16.7.2 Alternative Procedures for Requesting Interconnection Service. 76

Appendix 1 – Informational Interconnection Study Request

Appendix 2 – Informational Interconnection Study Agreement

Appendix 3 – Interconnection Request for a Large Generating Facility

Appendix 4 – Interconnection Feasibility Study Agreement

Appendix 5 – Serial Interconnection System Impact Study Agreement

Appendix 6-1 – Overview and Timeline of Initiation of a DISIS Cluster: the DISIS Request Window, Customer Engagement Window, and Phase 1 of the DISIS

Appendix 6-2 – Overview and Timeline of Definitive Interconnection Study Process, Including the DISIS Process

Appendix 6-3 – Definitive Interconnection System Impact Study Agreement

Appendix 7 – Interconnection Facilities Study Agreement

Appendix 8-1 – Transitional Serial Interconnection Facilities Study Agreement

Appendix 8-2 – Transitional Cluster Study Agreement

Appendix 9 – Optional Interconnection Study Agreement

Appendix 10 – Standard Large Generator Interconnection Agreement

Appendix 11– Interconnection Procedures for a Wind Generating Plant

Appendix 12 – Generation Replacement Study Agreement

Appendix 13 – Generator Replacement Coordinator

ATTACHMENT K -- STANDARD LARGE GENERATOR INTERCONNECTION PROCEDURES (LGIP)

(APPLICABLE TO GENERATING FACILITIES THAT EXCEED 20 MW) (DEC Zone and DEP Zone)

Section 1. Definitions.

Adverse System Impact shall mean the negative effects due to technical or operational limits on conductors or equipment being exceeded that may compromise the safety and reliability of the electric system.

Affected System shall mean an electric system other than the Transmission Provider's Transmission System that may be affected by the proposed interconnection.

Affected System Operator shall mean the entity that operates an Affected System.

Affiliate shall mean, with respect to a corporation, partnership or other entity, each such other corporation, partnership or other entity that directly or indirectly, through one or more intermediaries, controls, is controlled by, or is under common control with, such corporation, partnership or other entity.

Ancillary Services shall mean those services that are necessary to support the transmission of capacity and energy from resources to loads while maintaining reliable operation of the Transmission Provider's Transmission System in accordance with Good Utility Practice.

Applicable Laws and Regulations shall mean all duly promulgated applicable federal, state and local laws, regulations, rules, ordinances, codes, decrees, judgments, directives, or judicial or administrative orders, permits and other duly authorized actions of any Governmental Authority.

Applicable Reliability Council shall mean the reliability council applicable to the Transmission System to which the Generating Facility is directly interconnected.

Applicable Reliability Standards shall mean the requirements and guidelines of NERC, the Applicable Reliability Council, and the Control Area of the Transmission System to which the Generating Facility is directly interconnected.

Base Case shall mean the base case power flow, short circuit, and stability data bases used for the Interconnection Studies by the Transmission Provider or Interconnection Customer.

Breach shall mean the failure of a Party to perform or observe any material term or condition of the Standard Large Generator Interconnection Agreement.

Breaching Party shall mean a Party that is in Breach of the Standard Large Generator Interconnection Agreement.

Business Day shall mean Monday through Friday, excluding Federal Holidays.

Calendar Day shall mean any day including Saturday, Sunday or a Federal Holiday.

Cluster shall mean a group of Interconnection Requests (one or more) that are studied together for the purpose of conducting the Interconnection Studies.

Cluster Study shall mean an Interconnection Study evaluating a Cluster of one or more Interconnection Requests.

Clustering shall mean the process whereby a group of Interconnection Requests is studied together, instead of serially, for the purpose of conducting the Interconnection Studies.

Commercial Operation shall mean the status of a Generating Facility, or Replacement Generating Facility, that has commenced generating electricity for sale, excluding electricity generated during Trial Operation.

Commercial Operation Date of a unit shall mean the date on which the Generating Facility, or Replacement Generating Facility, commences Commercial Operation as agreed to by the Parties pursuant to Appendix E to the Standard Large Generator Interconnection Agreement.

Confidential Information shall mean any confidential, proprietary or trade secret information of a plan, specification, pattern, procedure, design, device, list, concept, policy or compilation relating to the present or planned business of a Party, which is designated as confidential by the Party supplying the information, whether conveyed orally, electronically, in writing, through inspection, or otherwise.

Contingent Facilities shall mean those unbuilt Interconnection Facilities and Network Upgrades upon which the Interconnection Request's costs, timing, and study findings are dependent, and if delayed or not built, could cause a need for Re-Studies of the Interconnection Request or a reassessment of the Interconnection Facilities and/or Network Upgrades and/or costs and timing.

Control Area shall mean an electrical system or systems bounded by interconnection metering and telemetry, capable of controlling generation to maintain its interchange schedule with other Control Areas and contributing to frequency regulation of the interconnection. A Control Area must be certified by an Applicable Reliability Council. Control Area shall have the same meaning as Balancing Authority Area as defined by NERC.

Customer Engagement Window shall have the meaning set forth in Section 10.1 of the LGIP.

Default shall mean the failure of a Breaching Party to cure its Breach in accordance with Article 17 of the Standard Large Generator Interconnection Agreement.

Definitive Interconnection Study Process ("Definitive Interconnection Study") shall mean an Interconnection Study process adopted at Transmission Provider's option for purposes of administering a Cluster Study inclusive of the Informational Interconnection Study Process, the Transitional Serial Study Process, the Transitional Cluster Study Process, the DISIS Request Window, Customer Engagement Window, the Definitive Interconnection System Impact Study, and the Interconnection Facilities Study. Both the Resource Solicitation Cluster and the DISIS Cluster are processed under the Definitive Interconnection Study.

Definitive Interconnection System Impact Study ("DISIS") shall mean an engineering study that evaluates the impact of a Cluster on the safety and reliability of the Transmission System and, if applicable, an Affected System.

Definitive Interconnection System Impact Study Agreement ("DISIS Agreement") shall mean the form of agreement contained in Appendix 6-3 of the LGIP for conducting the Definitive Interconnection System Impact Study.

Definitive Interconnection System Impact Study Cluster ("DISIS Cluster") shall mean an engineering study that evaluates the impact of a Cluster on the safety and reliability of Transmission System and, if applicable, an Affected System.

DISIS Request Window shall have the meaning set forth in Section 10.1 of the LGIP.

Dispute Resolution shall mean the procedure for resolution of a dispute between the Parties in which they will first attempt to resolve the dispute on an informal basis.

Distribution System shall mean the Transmission Provider's facilities and equipment used to transmit electricity to ultimate usage points such as homes and industries directly from nearby generators or from interchanges with higher voltage transmission networks which transport bulk power over longer distances. The voltage levels at which distribution systems operate differ among areas.

Distribution Upgrades shall mean the additions, modifications, and upgrades to the Transmission Provider's Distribution System at or beyond the Point of Interconnection to facilitate interconnection of the Generating Facility and render the transmission service necessary to effect Interconnection Customer's wholesale sale of electricity in interstate commerce. Distribution Upgrades do not include Interconnection Facilities.

Effective Date shall mean the date on which the Standard Large Generator Interconnection Agreement becomes effective upon execution by the Parties subject to acceptance by FERC, or if filed unexecuted, upon the date specified by FERC.

Emergency Condition shall mean a condition or situation: (1) that in the judgment of the Party making the claim is imminently likely to endanger life or property; or (2) that, in the case of a Transmission Provider, is imminently likely (as determined in a non-discriminatory manner) to cause a material adverse effect on the security of, or damage to Transmission Provider's Transmission System, Transmission Provider's Interconnection Facilities or the electric systems of others to which the Transmission Provider's Transmission System is directly connected; or (3) that, in the case of Interconnection Customer, is imminently likely (as determined in a non-discriminatory manner) to cause a material adverse effect on the security of, or damage to, the Generating Facility or Interconnection Customer's Interconnection Facilities. System restoration and black start shall be considered Emergency Conditions; provided that Interconnection Customer is not obligated by the Standard Large Generator Interconnection Agreement to possess black start capability.

Energy Resource Interconnection Service ("ERIS") shall mean an Interconnection Service that allows the Interconnection Customer to connect its Generating Facility to the Transmission Provider's Transmission System to be eligible to deliver the Generating Facility's electric output using the existing firm or non-firm capacity of the Transmission Provider's Transmission System on an as available basis. Energy Resource Interconnection Service in and of itself does not convey transmission service.

Engineering & Procurement ("E&P") Agreement shall mean an agreement that authorizes the Transmission Provider to begin engineering and procurement of long lead-time items necessary for the establishment of the interconnection in order to advance the implementation of the Interconnection Request.

Environmental Law shall mean Applicable Laws or Regulations relating to pollution or protection of the environment or natural resources.

Existing Generating Facility shall mean a Generating Facility that is currently in-service or under construction with an unsuspended interconnection agreement.

Federal Power Act shall mean the Federal Power Act, as amended, 16 U.S.C. §§ 791a et seq.

FERC shall mean the Federal Energy Regulatory Commission (Commission) or its successor.

Force Majeure shall mean any act of God, labor disturbance, act of the public enemy, war, insurrection, riot, fire, storm or flood, explosion, breakage or accident to machinery or equipment, any order, regulation or restriction imposed by governmental, military or lawfully established civilian authorities, or any other cause beyond a Party's control. A Force Majeure event does not include acts of negligence or intentional wrongdoing by the Party claiming Force Majeure.

Generating Facility shall mean Interconnection Customer's device for the production and/or storage for later injection of electricity identified in the Interconnection Request, but shall not include the Interconnection Customer's Interconnection Facilities. A Generating Facility may consist of one or more generating unit(s) and/or storage device(s) which usually can operate independently and be brought online or taken offline individually.

Generating Facility Capacity shall mean the net capacity, in kW or MW, as applicable, of the Generating Facility and the aggregate net capacity of the Generating Facility where it includes multiple energy production devices.

Generating Facility Modification shall mean modification to an Existing Generating Facility, including comparable replacement of only a portion of the equipment at the Existing Generating Facility.

Generation Replacement shall mean replacement of one or more generating units and/or storage devices at an Existing Generating Facility with one or more new generating units or storage devices at the same electrical Point of Interconnection as those being decommissioned and electrically disconnected. The replacement facility may be of a different fuel type or a combination of different fuel types.

Generator Replacement Interconnection Facilities Study shall mean a study to determine a list of facilities to grant an Interconnection Customer's request to interconnect a Replacement Generating Facility, the cost of those facilities, and the time required to interconnect those facilities. The scope of the study is defined in Section 4.9.4 of the Standard Large Generator Interconnection Procedures.

Good Utility Practice shall mean any of the practices, methods and acts engaged in or approved by a significant portion of the electric industry during the relevant time period, or any of the practices, methods and acts which, in the exercise of reasonable judgment in light of the facts known at the time the decision was made, could have been expected to accomplish the desired result at a reasonable cost consistent with good business practices, reliability, safety and expedition. Good Utility Practice is not intended to be limited to the optimum practice, method, or act to the exclusion of all others, but rather to be acceptable practices, methods, or acts generally accepted in the region.

Governmental Authority shall mean any federal, state, local or other governmental regulatory or administrative agency, court, commission, department, board, or other governmental subdivision,

legislature, rulemaking board, tribunal, or other governmental authority having jurisdiction over the Parties, their respective facilities, or the respective services they provide, and exercising or entitled to exercise any administrative, executive, police, or taxing authority or power; provided, however, that such term does not include Interconnection Customer, Transmission Provider, or any Affiliate thereof.

Hazardous Substances shall mean any chemicals, materials or substances defined as or included in the definition of "hazardous substances," "hazardous wastes," "hazardous materials," "hazardous constituents," "restricted hazardous materials," "extremely hazardous substances," "toxic substances," "radioactive substances," "contaminants," "pollutants," "toxic pollutants" or words of similar meaning and regulatory effect under any applicable Environmental Law, or any other chemical, material or substance, exposure to which is prohibited, limited or regulated by any applicable Environmental Law.

Informational Interconnection Study shall mean an analysis based on assumptions specified by Interconnection Customer in the Informational Interconnection Study Agreement as further described in Section 3.2.

Informational Interconnection Study Agreement shall mean the form of agreement contained in Appendix 2 of the LGIP for conducting the Informational Interconnection Study.

Initial Synchronization Date shall mean the date upon which the Generating Facility is initially synchronized and upon which Trial Operation begins.

In-Service Date shall mean the date upon which the Interconnection Customer reasonably expects it will be ready to begin use of the Transmission Provider's Interconnection Facilities to obtain back feed power.

Interconnection Customer shall mean any entity, including the Transmission Provider, Transmission Owner or any of the Affiliates or subsidiaries of either, that proposes to interconnect its Generating Facility with the Transmission Provider's Transmission System or represents an Existing Generating Facility.

Interconnection Customer's Interconnection Facilities shall mean all facilities and equipment, as identified in Appendix A of the Standard Large Generator Interconnection Agreement, that are located between the Generating Facility and the Point of Change of Ownership, including any modification, addition, or upgrades to such facilities and equipment necessary to physically and electrically interconnect the Generating Facility to the Transmission Provider's Transmission System. Interconnection Customer's Interconnection Facilities are sole use facilities.

Interconnection Facilities shall mean the Transmission Provider's Interconnection Facilities and the Interconnection Customer's Interconnection Facilities. Collectively, Interconnection Facilities include all facilities and equipment between the Generating Facility and the Point of Interconnection, including any modification, additions or upgrades that are necessary to physically and electrically interconnect the Generating Facility to the Transmission Provider's Transmission System. Interconnection Facilities are sole use facilities (e.g. for generator interconnection) and shall not include Distribution Upgrades, Stand Alone Network Upgrades or Network Upgrades. Interconnection Facilities may be shared by more than one Generating Facility.

Interconnection Facilities Study shall mean a study conducted by the Transmission Provider or a third party consultant for the Interconnection Customer to determine a list of facilities (including Transmission Provider's Interconnection Facilities and Network Upgrades as identified in the Serial

Interconnection System Impact Study or the Definitive Interconnection System Impact Study), the cost of those facilities, and the time required to interconnect the Generating Facility with the Transmission Provider's Transmission System. The scope of the study is defined in Section 11 of the Standard Large Generator Interconnection Procedures.

Interconnection Facilities Study Agreement shall mean the form of agreement contained in Appendix 7 of the Standard Large Generator Interconnection Procedures for conducting the Interconnection Facilities Study.

Interconnection Feasibility Study shall mean a preliminary evaluation of the system impact and cost of interconnecting the Generating Facility to the Transmission Provider's Transmission System, the scope of which is described in Section 8 of the Standard Large Generator Interconnection Procedures.

Interconnection Feasibility Study Agreement shall mean the form of agreement contained in Appendix 4 of the Standard Large Generator Interconnection Procedures for conducting the Interconnection Feasibility Study.

Interconnection Request shall mean an Interconnection Customer's request, in the form of Appendix 3 to the Standard Large Generator Interconnection Procedures, in accordance with the Tariff, to interconnect a new Generating Facility, or to increase the capacity of, or make a Material Modification to the operating characteristics of, an existing Generating Facility that is interconnected with the Transmission Provider's Transmission System.

Interconnection Service shall mean the service provided by the Transmission Provider associated with interconnecting the Interconnection Customer's Generating Facility to the Transmission Provider's Transmission System and enabling it to receive electric energy and capacity from the Generating Facility at the Point of Interconnection, pursuant to the terms of the Standard Large Generator Interconnection Agreement and, if applicable, the Transmission Provider's Tariff.

Interconnection Study shall mean any of the following studies: the Replacement Impact Study, the Reliability Assessment Study, Generator Replacement Interconnection Facilities Study, the Interconnection Feasibility Study, the Serial Interconnection System Impact Study, the Definitive Interconnection System Impact Study, and the Interconnection Facilities Study described in the Standard Large Generator Interconnection Procedures. The Transmission Provider shall undertake Interconnection Studies pursuant to either a Serial Interconnection Study Process or a Definitive Interconnection Study Process as described in these Large Generator Interconnection Procedures.

Interconnection Study Agreement shall mean any of the following agreements: the Interconnection Feasibility Study, the Definitive Interconnection System Impact Study Agreement, the Serial Interconnection System Impact Study Agreement or the Interconnection Facilities Study Agreement described in these Large Generator Interconnection Procedures.

IRS shall mean the Internal Revenue Service.

Joint Operating Committee shall be a group made up of representatives from Interconnection Customers and the Transmission Provider to coordinate operating and technical considerations of Interconnection Service.

Large Generating Facility shall mean a Generating Facility having a Generating Facility Capacity of more than 20 MW.

Loss shall mean any and all losses relating to injury to or death of any person or damage to property, demand, suits, recoveries, costs and expenses, court costs, attorney fees, and all other obligations by or to third parties, arising out of or resulting from the other Party's performance, or non-performance of its obligations under the Standard Large Generator Interconnection Agreement on behalf of the indemnifying Party, except in cases of gross negligence or intentional wrongdoing by the indemnifying Party.

Material Modification shall mean (1) in the Serial Interconnection Study Process, those modifications that have a material impact on the cost or timing of any Interconnection Request with a later queue priority date, (2) in the Definitive Interconnection Study Process, those modifications that have a material impact on the cost or timing of any Interconnection Request with (a) a later Queue Position or (b) a Queue Position which is included in the same Cluster, and (3) planned modifications to an Existing Generating Facility that is undergoing evaluation for a Generating Facility Modification or Generation Replacement that have a material impact on the Transmission System, as compared to the impacts of the Existing Generating Facility prior to the modification or replacement with respect to: i) steady-state thermal or voltage limits, ii) dynamic system stability and response, or iii) short-circuit capability limit.

Metering Equipment shall mean all metering equipment installed or to be installed at the Generating Facility pursuant to the Standard Large Generator Interconnection Agreement at the metering points, including but not limited to instrument transformers, MWh-meters, data acquisition equipment, transducers, remote terminal unit, communications equipment, phone lines, and fiber optics.

NERC shall mean the North American Electric Reliability Council or its successor organization.

Network Resource shall mean any designated generating resource owned, purchased, or leased by a Network Customer under the Network Integration Transmission Service Agreement. Network Resources do not include any resource, or any portion thereof, that is committed for sale to third parties or otherwise cannot be called upon to meet the Network Customer's Network Load on a non-interruptible basis.

Network Resource Interconnection Service ("NRIS") shall mean an Interconnection Service that allows the Interconnection Customer to integrate its Large Generating Facility with the Transmission Provider's Transmission System (1) in a manner comparable to that in which the Transmission Provider integrates its generating facilities to serve native load customers; or (2) in an RTO or ISO with market based congestion management, in the same manner as Network Resources. Network Resource Interconnection Service in and of itself does not convey transmission service.

Network Upgrades shall mean the additions, modifications, and upgrades to the Transmission Provider's Transmission System required at or beyond the point at which the Interconnection Facilities connect to the Transmission Provider's Transmission System to accommodate the interconnection of the Large Generating Facility to the Transmission Provider's Transmission System.

Notice of Dispute shall mean a written notice of a dispute or claim that arises out of or in connection with the Standard Large Generator Interconnection Agreement or its performance.

OASIS shall mean the Transmission Provider's Open Access Same-Time Information System.

Optional Interconnection Study shall mean a sensitivity analysis based on assumptions specified by the Interconnection Customer in the Optional Interconnection Study Agreement.

Optional Interconnection Study Agreement shall mean the form of agreement contained in Appendix 9 of the Standard Large Generator Interconnection Procedures for conducting the Optional Interconnection Study.

Party or Parties shall mean Transmission Provider, Transmission Owner, Interconnection Customer or any combination of the above.

Permissible Technological Advancement shall mean modification to equipment that (1) results in electrical performance that is equal to or better than the electrical performance expected prior to the technology change, (2) does not cause any reliability concerns, (3) does not degrade the electrical characteristics of the generating equipment (e.g., the ratings, impedances, efficiencies, capabilities, and performance of the equipment under steady-state and dynamic conditions) and (4) does not have a material impact on the cost or timing of any Interconnection Request with a later queue priority date, and is therefore not a Material Modification. A Permissible Technological Advancement is a change in equipment that may achieve cost or grid performance efficiencies that may include turbines, inverters, plant supervisory controls or other devices but does not include changes in generation technology type or fuel type.

Phase ("Phase 1", "Phase 2", or "Phase 3") shall mean a distinct part of the Definitive Interconnection System Impact Study Process as described in Section 10.8 herein.

Point of Change of Ownership shall mean the point, as set forth in Appendix A to the Standard Large Generator Interconnection Agreement, where the Interconnection Customer's Interconnection Facilities connect to the Transmission Provider's Interconnection Facilities.

Point of Interconnection shall mean the point, as set forth in Appendix A to the Standard Large Generator Interconnection Agreement, where the Interconnection Facilities connect to the Transmission Provider's Transmission System.

Provisional Interconnection Service shall mean Interconnection Service provided by Transmission Provider associated with interconnecting the Interconnection Customer's Generating Facility to Transmission Provider's Transmission System and enabling that Transmission System to receive electric energy and capacity from the Generating Facility at the Point of Interconnection, pursuant to the terms of the Provisional Large Generator Interconnection Agreement and, if applicable, the Tariff.

Provisional Large Generator Interconnection Agreement shall mean the interconnection agreement for Provisional Interconnection Service established between Transmission Provider and/or the Transmission Owner and the Interconnection Customer. This agreement shall take the form of the Large Generator Interconnection Agreement, modified for provisional purposes.

Queue shall mean a queue for valid Interconnection Requests for the Serial Interconnection Study Process or the Definitive Interconnection Study Process.

Queue Position shall mean the order of a valid Interconnection Request, relative to all other pending valid Interconnection Requests, in either the Serial Interconnection Study Process or the Definitive Interconnection Study Process. In the Serial Interconnection Study Process, the Queue Position is established based upon the date and time of receipt of the valid Interconnection Request by the Transmission Provider. Where a Transmission Provider is administering a Definitive Interconnection Study Process, all Interconnection Requests studied in a single Cluster shall be considered equally queued but Clusters initiated earlier in time shall be considered to have an earlier Queue Position than clusters initiated later. The Queue Position of an Interconnection Request shall have no bearing on the allocation of the cost

of the common Network Upgrades identified in the applicable Cluster Study (such costs will be allocated among Interconnection Requests in accordance with Section 10.4).

Readiness Milestone(s) shall have the meaning set forth in Section 10.11 of the LGIP.

Reasonable Efforts shall mean, with respect to an action required to be attempted or taken by a Party under the Standard Large Generator Interconnection Agreement, efforts that are timely and consistent with Good Utility Practice and are otherwise substantially equivalent to those a Party would use to protect its own interests.

Reliability Assessment Study shall mean an engineering study that evaluates the impact of a proposed Generation Replacement on the reliability of Transmission System during the time period between the date that the Existing Generating Facility ceases commercial operations and the expected Commercial Operation Date of the Replacement Generating Facility.

Replacement Generating Facility shall mean a Generating Facility that replaces an Existing Generating Facility, or a portion thereof, at the same electrical Point of Interconnection pursuant to Section 4.9 of this LGIP.

Replacement Impact Study shall mean an engineering study that evaluates the impact of a proposed Generation Replacement on the reliability of the Transmission System.

Resource Plan shall mean any process authorized or required by Applicable Laws and Regulations for, *inter alia*, the selection of Generating Facilities interconnected to the Transmission System of Transmission Provider.

Resource Planning Entity shall mean any entity required to develop a Resource Plan or conduct a Resource Solicitation Process.

Resource Solicitation Cluster shall mean a Cluster Study associated with a Resource Plan or related process.

Resource Solicitation Process shall mean any process authorized or required by Applicable Laws and Regulations for the acquisition of Network Resources.

Scoping Meeting shall mean the meeting between representatives of the Interconnection Customer and Transmission Provider conducted for the purpose of discussing the proposed Interconnection Request, alternative interconnection options, to exchange information including any transmission data and earlier study evaluations that would be reasonably expected to affect such interconnection options, to analyze such information, and to determine the potential feasible Points of Interconnection.

Serial Interconnection Study Process shall mean the process of studying Interconnection Requests on a serial basis inclusive of the Interconnection Feasibility Study, the Serial Interconnection System Impact Study, the Interconnection Facilities Study, and the Optional Interconnection Study Process.

Serial Interconnection System Impact Study shall mean an engineering study that evaluates the impact of the proposed interconnection on the safety and reliability of Transmission Provider's Transmission System and, if applicable, an Affected System. The study shall identify and detail the system impacts that would result if the Generating Facility were interconnected without project modifications or system modifications, focusing on the Adverse System Impacts identified in the Interconnection Feasibility

Study, or to study potential impacts, including but not limited to those identified in the Scoping Meeting as described in the Standard Large Generator Interconnection Procedures.

Serial Interconnection System Impact Study Agreement shall mean the form of agreement contained in Appendix 5 of the Standard Large Generator Interconnection Procedures for conducting the Interconnection System Impact Study.

Site Control shall mean the exclusive land right to develop, construct, operate, and maintain the Generating Facility over the term of expected operation of the Generating Facility. Site Control shall include the right to develop, construct, operate, and maintain Interconnection Customer's Interconnection Facilities. Site Control may be demonstrated by documentation establishing: (1) ownership of, a leasehold interest in, or a right to develop a site of sufficient size to construct and operate the Generating Facility and associated Interconnection Customer's Interconnection Facilities; (2) an option to purchase or acquire a leasehold interest in a site of sufficient size to construct and operate the Generating Facility and associated Interconnection Facilities; or (3) any other documentation that clearly demonstrates the right of the Interconnection Customer to exclusively occupy a site of sufficient size to construct and operate the Generating Facility. Site Control for any co-located project is demonstrated by a contract or other agreement demonstrating shared land use for all co-located projects that meet the aforementioned provisions of this Site Control definition.

Small Generating Facility shall mean a Generating Facility that has a Generating Facility Capacity of no more than 20 MW.

Stand Alone Network Upgrades shall mean Network Upgrades that are not part of an Affected System that an Interconnection Customer may construct without affecting day-to-day operations of the Transmission System during their construction. Both the Transmission Provider and the Interconnection Customer must agree as to what constitutes Stand Alone Network Upgrades and identify them in Appendix A to the Standard Large Generator Interconnection Agreement. If the Transmission Provider and Interconnection Customer disagree about whether a particular Network Upgrade is a Stand Alone Network Upgrade, the Transmission Provider must provide the Interconnection Customer a written technical explanation outlining why the Transmission Provider does not consider the Network Upgrade to be a Stand Alone Network Upgrade within 15 days of its determination.

Standard Large Generator Interconnection Agreement (LGIA) shall mean the form of interconnection agreement applicable to an Interconnection Request pertaining to a Large Generating Facility that is included in the Transmission Provider's Tariff.

Standard Large Generator Interconnection Procedures (LGIP) shall mean the interconnection procedures applicable to an Interconnection Request pertaining to a Large Generating Facility that are included in the Transmission Provider's Tariff.

Surplus Interconnection Service shall mean any unneeded portion of Interconnection Service established in a Large Generator Interconnection Agreement, such that if Surplus Interconnection Service is utilized, the total amount of Interconnection Service at the Point of Interconnection would remain the same.

System Protection Facilities shall mean the equipment, including necessary protection signal communications equipment, required to protect (1) the Transmission Provider's Transmission System from faults or other electrical disturbances occurring at the Generating Facility and (2) the Generating Facility from faults or other electrical system disturbances occurring on the Transmission Provider's Transmission

System or on other delivery systems or other generating systems to which the Transmission Provider's Transmission System is directly connected.

Tariff shall mean the Transmission Provider's Tariff through which open access transmission service and Interconnection Service are offered, as filed with FERC, and as amended or supplemented from time to time, or any successor tariff.

Transmission Owner shall mean an entity that owns, leases or otherwise possesses an interest in the portion of the Transmission System at the Point of Interconnection and may be a Party to the Standard Large Generator Interconnection Agreement to the extent necessary.

Transmission Provider shall mean the public utility (or its designated agent) that owns, controls, or operates transmission or distribution facilities used for the transmission of electricity in interstate commerce and provides transmission service under the Tariff. The term Transmission Provider should be read to include the Transmission Owner when the Transmission Owner is separate from the Transmission Provider.

Transmission Provider's Interconnection Facilities shall mean all facilities and equipment owned, controlled, or operated by the Transmission Provider from the Point of Change of Ownership to the Point of Interconnection as identified in Appendix A to the Standard Large Generator Interconnection Agreement, including any modifications, additions or upgrades to such facilities and equipment. Transmission Provider's Interconnection Facilities are sole use facilities and shall not include Distribution Upgrades, Stand Alone Network Upgrades or Network Upgrades. Transmission Provider's Interconnection Facilities may be shared by more than one Generating Facility in a given study.

Transmission System shall mean the facilities owned, controlled or operated by the Transmission Provider or Transmission Owner that are used to provide transmission service under the Tariff.

Trial Operation shall mean the period during which Interconnection Customer is engaged in on-site test operations and commissioning of the Generating Facility prior to Commercial Operation.

Withdrawal Penalty shall have the meaning set forth in Section 4.7.1 of the LGIP.

Section 2. Scope and Application.

2.1 Application of Standard Large Generator Interconnection Procedures.

Sections 2 through 16 apply to processing an Interconnection Request pertaining to a Large Generating Facility, including, but not limited to, a Generating Facility Modification that may constitute a Material Modification to the operating characteristics of an Existing Generating Facility, or a Replacement Generating Facility.

A request for a Replacement Generating Facility shall be evaluated pursuant to Section 4.9 of the LGIP.

A request for Generating Facility Modification for an Existing Generating Facility must be submitted to and coordinated with the Transmission Provider to allow the Transmission Provider to determine whether the proposed modification constitutes a Material Modification. If the Transmission Provider determines that the proposed Generating Facility Modification is a Material Modification, then the Generating Facility Modification request shall be submitted as a separate Interconnection Request pursuant to Section 4.4 of the LGIP

for that Generating Facility Modification. Such separate Interconnection Request shall be assigned a new Queue Position and proceed through the study process in the same manner as an Interconnection Request for a new Generating Facility.

As provided in Attachment M to the Tariff, Small Generating Facilities that are not eligible for the fast track process (as defined therein) will be processed in a single Queue with Large Generating Facilities. Additionally, Small Generating Facilities requesting NRIS shall be processed under this LGIP.

The study process applicable to all Interconnection Requests subject to these Procedures is dependent upon whether the Transmission Provider is implementing a Serial Interconnection Study Process or has transitioned to a Definitive Interconnection Study Process, as provided for in Section 7 and as detailed in these Large Generator Interconnection Procedures. Where the Transmission Provider transitions to a Definitive Interconnection Study Process, Interconnection Customers with Generating Facilities located in the Transmission Provider's Control Area and requesting Interconnection Service under this LGIP shall adhere to the Definitive Interconnection Study Process provisions of these Procedures and shall not be subject to the Serial Interconnection Study Process provisions herein. The Transmission Provider shall publicize its intent to transition to the Definitive Interconnection Study Process in Section 10 by posting notice to the OASIS website (the date of posting to be known as the "Cluster Study transition notice date") pursuant to Section 7. Such notice shall not be published until after approval of the revised LGIP by FERC. After the Transmission Provider publicizes its intent to transition to the Definitive Interconnection Study Process in Section 10 by posting notice to the OASIS website, the Transmission Provider may not at any time thereafter return to the *pro forma* Serial Interconnection Study Process.

The Informational Interconnection Study process in Section 3 is available only where the Transmission Provider is implementing a Definitive Interconnection Study Process. The Optional Interconnection Study Process in Section 13 is available only where the Transmission Provider is implementing a Serial Interconnection Study Process.

2.2 Comparability.

Transmission Provider shall receive, process and analyze all Interconnection Requests in a timely manner as set forth in this LGIP. Transmission Provider will use the same Reasonable Efforts in processing and analyzing Interconnection Requests from all Interconnection Customers, whether the Generating Facilities are owned by Transmission Provider, its subsidiaries or Affiliates or others.

2.3 Base Case Data.

Transmission Provider shall maintain base power flow, short circuit and stability databases, including all underlying assumptions, and contingency list on either its OASIS site or a password-protected website, subject to confidentiality provisions in LGIP Section 16.1. In addition, Transmission Provider shall maintain network models and underlying assumptions on either its OASIS site or a password-protected website. Such network models and underlying assumptions should reasonably represent those used during the most recent Interconnection Study and be representative of current system conditions. If Transmission Provider posts this information on a password-protected website, a link to the information must be provided on Transmission Provider's OASIS site. Transmission Provider is permitted to require that Interconnection Customers, OASIS site users and password-protected website users sign a confidentiality agreement before the release of commercially

sensitive information or Critical Energy Infrastructure Information in the Base Case data. Such databases and lists, hereinafter referred to as Base Cases, shall include all (1) generation projects and (2) transmission projects, including merchant transmission projects that are proposed for the Transmission System for which a transmission expansion plan has been submitted and approved by the applicable authority.

2.4 No Applicability to Transmission Service.

Nothing in this LGIP shall constitute a request for transmission service or confer upon an Interconnection Customer any right to receive transmission service.

Section 3. Definitive Interconnection Study Process – Informational Interconnection Study.

3.1 Informational Interconnection Study Agreement.

At any time, a prospective Interconnection Customer may request, and Transmission Provider (either itself or through a third-party subcontractor or consultant) authorized and opting to administer a Definitive Interconnection Study Process shall perform one or more Informational Interconnection Studies. Interconnection Customer shall submit a separate Informational Interconnection Study Request for each site and may submit multiple Informational Interconnection Study Requests for different Generating Facility sizes or configurations at a single site. An Informational Interconnection Study Request to evaluate one site at two different voltage levels shall be treated as two Informational Interconnection Study Requests. Any one Interconnection Customer (including affiliates) shall have no more than five (5) requests for Informational Interconnection Study reports pending at one time. Interconnection Customer must submit a deposit with each Informational Interconnection Study Request even when more than one request is submitted for a single site.

The request shall use the form in Appendix 1 of the LGIP and shall describe the assumptions that Interconnection Customer wishes Transmission Provider to study within the scope described in Section 3.2 of the LGIP below. Within five (5) Business Days after receipt of a request for an Informational Interconnection Study, Transmission Provider shall provide to Interconnection Customer an Informational Interconnection Study Agreement in the form of Appendix 2, including a non-binding good faith estimate of the timing and cost of completing the Informational Interconnection Study. Notwithstanding the above, the Transmission Provider shall not be required as a result of an Informational Interconnection Study Request to conduct any additional Interconnection Studies with respect to any other Interconnection Request.

Interconnection Customer shall execute the Informational Interconnection Study Agreement within ten (10) Business Days of receipt of an agreed upon scope of work and deliver the Informational Interconnection Study Agreement, the technical data, and a $10,000 deposit to Transmission Provider. The Transmission Provider shall then countersign and return the Informational Interconnection Study Agreement within ten (10) Business Days of receipt.

3.2 Scope of Informational Interconnection Study.

The intent of the Informational Interconnection Study is to aid Interconnection Customer in its business decisions related to interconnection of Generating Facilities prior to entering the Definitive Interconnection Study Process. The Informational Interconnection Study shall consist of analysis based on the assumptions and scope of work specified by Interconnection Customer in the Informational Interconnection Study Agreement. The Informational

Interconnection Study shall preliminarily identify the potential Transmission Provider's Interconnection Facilities and the Network Upgrades, and the estimated cost thereof, that may be required to provide transmission service or Interconnection Service based upon the results and assumptions of the Informational Interconnection Study. The Informational Interconnection Study shall be performed solely for informational purposes and is non-binding and does not confer any rights, as the Interconnection Customer must still successfully apply to interconnect to the Transmission Provider's System. Transmission Provider shall utilize existing studies to the extent practicable in conducting the Informational Interconnection Study.

3.3 Informational Interconnection Study Procedures.

The executed Informational Interconnection Study Agreement, the deposit, and technical and other data called for therein must be provided to Transmission Provider within ten (10) Business Days of Interconnection Customer's receipt of the Informational Interconnection Study Agreement. Transmission Provider shall use Reasonable Efforts to complete the Informational Interconnection Study within a mutually agreed upon time period specified within the Informational Interconnection Study Agreement. If Transmission Provider is unable to complete the Informational Interconnection Study within such time period, it shall notify Interconnection Customer and provide an estimated completion date and an explanation of the reasons why additional time is required. Any difference between the study payment and the actual cost of the study shall be paid to Transmission Provider or refunded to Interconnection Customer, as appropriate. Upon request, Transmission Provider shall provide Interconnection Customer supporting documentation and work papers and databases or data developed in the preparation of the Informational Interconnection Study, subject to confidentiality arrangements consistent with Section 16.1.

Section 4. Interconnection Requests.

4.1 General.

4.1.1 Serial Interconnection Study Deposit and Process.

An Interconnection Customer shall submit to Transmission Provider an Interconnection Request in the form of Appendix 3 to this LGIP and a refundable deposit of $10,000 where the Transmission Provider is administering a Serial Interconnection Study Process. Transmission Provider shall apply the deposit toward the cost of an Interconnection Feasibility Study. Interconnection Customer shall submit a separate Interconnection Request for each site and may submit multiple Interconnection Requests for a single site. Interconnection Customer must submit a deposit with each Interconnection Request even when more than one request is submitted for a single site. An Interconnection Request to evaluate one site at two different voltage levels shall be treated as two Interconnection Requests.

At Interconnection Customer's option, Transmission Provider and Interconnection Customer will identify alternative Point(s) of Interconnection and configurations at the Scoping Meeting to evaluate in this process and attempt to eliminate alternatives in a reasonable fashion given resources and information available. Interconnection Customer will select the definitive Point(s) of Interconnection to be studied no later than the execution of the Interconnection Feasibility Study Agreement.

Transmission Provider shall have a process in place to consider requests for Interconnection Service below the Generating Facility Capacity. These requests for Interconnection Service shall be studied at the level of Interconnection Service requested for purposes of Interconnection Facilities and Network Upgrades, and associated costs, but may be subject to other studies at the full Generating Facility Capacity to ensure safety and reliability of the system, with the study costs borne by the Interconnection Customer. If after the additional studies are complete, Transmission Provider determines that additional Network Upgrades are necessary, then Transmission Provider must: (1) specify which additional Network Upgrade costs are based on which studies; and (2) provide a detailed explanation of why the additional Network Upgrades are necessary. Any Interconnection Facility and/or Network Upgrade costs required for safety and reliability also will be borne by the Interconnection Customer. Interconnection Customers may be subject to additional control technologies as well as testing and validation of those technologies consistent with Article 6 of the LGIA. The necessary control technologies and protection systems shall be established in Appendix C of the executed, or requested to be filed unexecuted, LGIA.

4.1.2 Definitive Interconnection Study Deposit and Process.

Where the Transmission Provider is administering a Definitive Interconnection Study Process, an Interconnection Customer shall submit to Transmission Provider an Interconnection Request in the form of Appendix 3 to this LGIP, an application fee of $5,000, and a study deposit in cash based upon the requested capacity of the Generating Facility:

a. $20,000 plus one dollar ($1.00) per kWac for requests < 20 MW, or

b. $35,000 plus one dollar ($1.00) per kWac for requests ≥ 20 MW < 50 MW, or

c. $50,000 plus one dollar ($1.00) per kWac for requests ≥ 50 MW< 80MW, or

d. $150,000 for requests ≥ 80 MW < 200 MW, or

e. $250,000 for requests ≥ 200 MW.

Transmission Provider shall apply the deposit toward the cost of administering the Definitive Interconnection Study Process as well as any Network Upgrades and Interconnection Facilities, including overheads under a future Interconnection Agreement. Interconnection Customer shall submit a separate Interconnection Request for each site and may submit multiple Interconnection Requests for a single site. Interconnection Customer must submit a deposit with each Interconnection Request even when more than one request is submitted for a single site. Interconnection Customers evaluating different options (such as different sizes, sites, or voltages) are encouraged but not required to use the Informational Interconnection Process (Section 3) before entering the Definitive Interconnection Study Process.

4.1.3 Generator Replacement Study Deposit and Process.

A request for Generation Replacement shall be accompanied by: (i) a completed application in the form of Appendix 3 to the LGIP; (ii) a study deposit in the amount of $50,000; and (iii) a Generation Replacement Study Agreement in the form of Appendix 12 executed by the Interconnection Customer.

The expected Commercial Operation Date of a Replacement Generating Facility shall be no more than three (3) years from the date of cessation of operation of the Existing Generating Facility or four (4) years from the date a unit is determined as an unplanned (forced) outage. If the requested period of time between the cessation of Commercial Operation of the Existing Generating Facility and expected Commercial Operation Date of the Replacement Generating Facility is greater than three or four years as described in the preceding sentence, the request shall be treated as an Interconnection Request for a new Generating Facility.

4.2 Identification of Types of Interconnection Services.

4.2.1 Serial Interconnection Study Process.

At the time the Interconnection Request is submitted, Interconnection Customer must request either Energy Resource Interconnection Service or Network Resource Interconnection Service, as described; provided, however, any Interconnection Customer requesting Network Resource Interconnection Service may also request that it be concurrently studied for Energy Resource Interconnection Service, up to the point when an Interconnection Facility Study Agreement is executed. Interconnection Customer may then elect to proceed with Network Resource Interconnection Service or to proceed under a lower level of interconnection service to the extent that only certain upgrades will be completed.

4.2.2 Definitive Interconnection Study Process.

At the time the Interconnection Request is submitted, Interconnection Customer must request either Energy Resource Interconnection Service or Network Resource Interconnection Service; provided, however, any Interconnection Customer requesting Network Resource Interconnection Service may also request that it be concurrently studied for Energy Resource Interconnection Service prior to DISIS Phase 3 but must designate either ERIS or NRIS no later than five business days after the DISIS Phase 2 Report Meeting described in Section 10.8(c).

4.2.3 Energy Resource Interconnection Service.

4.2.3.1 The Product. Energy Resource Interconnection Service allows Interconnection Customer to connect the Large Generating Facility to the Transmission System and be eligible to deliver the Large Generating Facility's output using the existing firm or non-firm capacity of the Transmission System on an "as available" basis. Energy Resource Interconnection Service does not in and of itself convey any right to deliver electricity to any specific customer or Point of Delivery.

4.2.3.2 The Study. The study consists of short circuit/fault duty, steady state (thermal and voltage) and stability analyses. The short circuit/fault duty analysis would identify direct Interconnection Facilities required and the Network Upgrades necessary to address short circuit issues associated with the Interconnection Facilities. The stability and steady state studies would identify necessary upgrades to allow full output of the proposed Large Generating Facility and would also identify the maximum allowed output, at the time the study is performed, of the interconnecting Large Generating Facility without requiring additional Network Upgrades.

4.2.4 Network Resource Interconnection Service.

4.2.4.1 The Product. Transmission Provider must conduct the necessary studies and construct the Network Upgrades needed to integrate the Large Generating Facility (1) in a manner comparable to that in which Transmission Provider integrates its generating facilities to serve native load customers; or (2) in an ISO or RTO with market-based congestion management, in the same manner as Network Resources. Network Resource Interconnection Service allows Interconnection Customer's Large Generating Facility to be designated as a Network Resource, up to the Large Generating Facility's full output, on the same basis as existing Network Resources interconnected to Transmission Provider's Transmission System, and to be studied as a Network Resource on the assumption that such a designation will occur.

4.2.4.2 The Study. The Interconnection Study for Network Resource Interconnection Service shall assure that Interconnection Customer's Large Generating Facility meets the requirements for Network Resource Interconnection Service and as a general matter, that such Large Generating Facility's interconnection is also studied with Transmission Provider's Transmission System at peak load, under a variety of severely stressed conditions, to determine whether, with the Large Generating Facility at full output, the aggregate of generation in the local area can be delivered to the aggregate of load on Transmission Provider's Transmission System, consistent with Transmission Provider's reliability criteria and procedures. This approach assumes that some portion of existing Network Resources' output is displaced by the output of Interconnection Customer's Large Generating Facility. Network Resource Interconnection Service in and of itself does not convey any right to deliver electricity to any specific customer or Point of Delivery. The Transmission Provider may also study the Transmission System under non-peak load conditions. However, upon request by the Interconnection Customer, the Transmission Provider must explain in writing to the Interconnection Customer why the study of non-peak load conditions is required for reliability purposes.

4.3 Utilization of Surplus Interconnection Service.

Transmission Provider must provide a process that allows an Interconnection Customer to utilize or transfer Surplus Interconnection Service at an existing Point of Interconnection. The original Interconnection Customer or one of its affiliates shall have priority to utilize Surplus Interconnection Service. If the existing Interconnection Customer or one of its affiliates does not exercise its priority, then that service may be made available to other potential Interconnection Customers.

4.3.1 Surplus Interconnection Service Requests.

Surplus Interconnection Service requests may be made by the existing Interconnection Customer whose Generating Facility is already interconnected or one of its affiliates. Surplus Interconnection Service requests also may be made by another Interconnection Customer.

Transmission Provider shall use the process in Section 4.3.2 in evaluating Interconnection Requests for Surplus Service. Studies for Surplus Interconnection Service shall consist of reactive power, short circuit/fault duty, stability analyses, and any other appropriate studies. Steady-state (thermal/voltage) analyses may be performed as necessary to ensure that all required reliability conditions are studied. If the Surplus Interconnection Service was not studied under off-peak conditions, off-peak steady state analyses shall be performed to the

required level necessary to demonstrate reliable operation of the Surplus Interconnection Service. If the original System Impact Study is not available for the Surplus Interconnection Service, both off-peak and peak analysis may need to be performed for the existing Generating Facility associated with the request for Surplus Interconnection Service. The reactive power, short circuit/fault duty, stability, and steady-state analyses for Surplus Interconnection Service will identify any additional Interconnection Facilities and/or Network Upgrades necessary.

4.3.2 Process for Surplus Interconnection Service Requests.

An existing Interconnection Customer, whose facility is already interconnected, may submit a request for Surplus Interconnection Service by using the process outlined in this Section 4.3.2. The original Large Generator Interconnection Customer may retain the surplus for itself, or may make it available to an Affiliate or any other entity.

A. The existing Interconnection Customer, or an Affiliate, may make a Request for Surplus Interconnection Service, by submitting a complete request in the form of Appendix 3 to this LGIP, and a deposit for $10,000. Another entity may make a request, but must include concurrence from the existing Large Generator Interconnection Customer that they are willing to assign Surplus Interconnection Service to the entity ("Surplus Interconnection Customer", regardless of which type). The deposit shall be applied toward any Interconnection Studies pursuant to the Surplus Interconnection Request.

B. A Surplus Interconnection Request will not be considered to be a valid request until all items in Section 4.3.2(A.) have been received and deemed adequate by Transmission Provider. If an Interconnection Request fails to meet the requirements set forth in Section 4.3.2(A.), Transmission Provider shall notify the Surplus Interconnection Customer within five (5) Business Days of receipt of the initial Surplus Interconnection Request of the reasons for such failure and that the Surplus Interconnection Request does not constitute a valid request.

C. Transmission Provider shall acknowledge receipt of the Surplus Interconnection Request within five (5) Business Days of receipt of the request. Transmission Provider shall process the Surplus Interconnection Request outside of the non-Surplus Interconnection queue.

D. Transmission Provider shall tender a Surplus Interconnection Study Agreement to the Surplus Interconnection Customer within 30 Business Days of the original request if no deficiencies or within 30 Business Days from the time deficiencies in the application are cured by the Surplus Interconnection Customer.

E. Surplus Interconnection Customer shall execute the Surplus Interconnection Study Agreement and return to the Transmission Provider, along with a $50,000 study deposit.

F. The Transmission Provider will perform the Surplus Interconnection Study by performing a System Impact Study phase within 60 Business Days and, if necessary, a Facilities Study phase within an additional 90 Business Days.

G. After the Surplus Interconnection Study, the Transmission Provider will provide the results to the Surplus Interconnection Customer and, if applicable, to the original Interconnection Customer.

H. Within 10 Business Days of delivering the study results, the Transmission Provider will schedule a Customer meeting to discuss the results of the studies with the Surplus Interconnection Customer and, if applicable, with the original Interconnection Customer.

I. Within 30 days of the Customer meeting, Transmission Provider will prepare the amendments to the Surplus Interconnection Agreement, which will take the form of an LGIA, and deliver them to the Surplus Interconnection Customer and, if applicable, to the original Interconnection Customer.

J. A 60-day negotiation period will occur to finalize timelines and financial aspects. In the event that the negotiations fail to result in an agreement, the Surplus Interconnection Customer may direct the Transmission Provider that the agreement be filed with the FERC unexecuted.

K. Surplus Interconnection Service cannot be offered unless the original Large Generator Interconnection Customer's Interconnection Facilities, Network Upgrades and any identified Contingent Network Upgrades identified in the original LGIA are In Service. Surplus Service cannot be granted to the Surplus Interconnection Customer if the Surplus Interconnection Study indicates additional Network Upgrades would be needed.

L. Requests for Surplus Interconnection Service cannot exceed the original Interconnected MW amount, and must be for either the same service (ERIS or NRIS) or, if the original LGIA was for NRIS, then the Surplus Interconnection Customer could request the lower level ERIS service if desired.

4.4 Valid Interconnection Request.

4.4.1 Initiating an Interconnection Request in the Serial Interconnection Study Process.
To initiate an Interconnection Request, Interconnection Customer must submit all of the following: (i) a $10,000 deposit, (ii) a completed application in the form of Appendix 3, and (iii) demonstration of Site Control or a posting of an additional deposit of $10,000. Such deposits shall be applied toward any Interconnection Studies pursuant to the Interconnection Request. If Interconnection Customer demonstrates Site Control within the cure period specified in Section 4.4.4 after submitting its Interconnection Request, the additional deposit shall be refundable; otherwise, all such deposit(s), additional and initial, become non-refundable.

The expected In-Service Date of the new Large Generating Facility or increase in capacity of the existing Generating Facility shall be no more than the process window for the regional expansion planning period (or in the absence of a regional planning process, the process window for Transmission Provider's expansion planning period) not to exceed seven years from the date the Interconnection Request is received by Transmission Provider, unless Interconnection Customer demonstrates that engineering, permitting and construction of the new Large Generating Facility or increase in capacity of the existing Generating Facility will

take longer than the regional expansion planning period. The In-Service Date may succeed the date the Interconnection Request is received by Transmission Provider by a period up to ten years, or longer where Interconnection Customer and Transmission Provider agree, such agreement not to be unreasonably withheld.

4.4.2 Initiating an Interconnection Request in the Definitive Interconnection Study Process. An Interconnection Customer wishing to join the Definitive Interconnection Study Process shall submit its Interconnection Request to the Transmission Provider within, and no later than the close of the annual DISIS Request Window. To initiate an Interconnection Request, the Interconnection Customer must submit all of the following:

a. The study deposit described in Section 4.1.2;

b. A completed application in the form of Appendix 3 to the LGIP (including applicable technical information);

c. A demonstration of Site Control as defined in Section 1 of the LGIP. Specifications for acceptable site size for the purposes of demonstrating Site Control are posted on Transmission Provider's OASIS website. Interconnection Customer may propose alternative specifications for site size to those posted on OASIS for Transmission Provider's approval. In the event that the Transmission Provider and the Interconnection Customer cannot reach agreement related to adequacy of site size, Transmission Prover will accept a Professional Engineer (licensed in State of service) stamped site plan drawing that depicts the proposed generation arrangement and specifies the maximum facility output for that arrangement. Interconnection Customer may provide a cash deposit equal to $20,000 plus $500/MW in lieu of Site Control to enter Phase 1. A deposit in lieu of Site Control is not accepted for later Phases of the Definitive Interconnection Study Process;

d. A Point of Interconnection;

e. If the request is for NRIS and if Transmission Provider has not been notified pursuant to Section 29.2 of Part III of the Tariff that Interconnection Customer's proposed Generating Facility is to be designated as a Network Resource within Transmission Provider's Control Area, the point of delivery or the geographic location on Transmission Provider's Transmission System at which Interconnection Customer intends to deliver output out of Transmission Provider's Control Area; and

f. The requested capacity of the Generating Facility.

Interconnection Customer shall select the definitive Point of Interconnection to be studied no later than the execution of the Definitive System Impact Study Agreement. For purposes of clustering Interconnection Requests, Transmission Provider may make reasonable changes to the requested Point(s) of Interconnection to facilitate efficient interconnection of Interconnection Customers at common points of interconnection. Transmission Provider shall notify Interconnection Customer(s) in writing of any intended changes to the requested Point(s) of Interconnection and the Point(s) of Interconnection shall only change upon mutual agreement.

Transmission Provider shall have a process in place to consider requests for Interconnection Service below the Generating Facility Capacity. These requests for Interconnection Service shall be studied at the level of Interconnection Service requested for purposes of Interconnection Facilities and Network Upgrades, and associated costs, but may be subject to other studies at the full Generating Facility Capacity to ensure safety and reliability of the Transmission System, with the study costs borne by the Interconnection Customer. If after the additional studies are complete, Transmission Provider determines that additional Network Upgrades are necessary, then Transmission Provider must: (1) specify which additional Network Upgrade costs are based on which studies; and (2) provide a detailed explanation of why the additional Network Upgrades are necessary. Any Interconnection Facility and/or Network Upgrade costs required for safety and reliability also will be borne by the Interconnection Customer. Interconnection Customers may be subject to additional control technologies as well as testing and validation of those technologies consistent with Article 6 of the LGIA. The necessary control technologies and protection systems shall be established in Appendix C of the executed, or requested to be filed unexecuted, LGIA.

The expected In-Service Date of the new Large Generating Facility or increase in capacity of the existing Generating Facility shall be no more than the process window for the regional expansion planning period (or in the absence of a regional planning process, the process window for Transmission Provider's expansion planning period) not to exceed (7) seven years from the date the Interconnection Request is received by Transmission Provider, unless Interconnection Customer demonstrates that engineering, permitting and construction of the new Large Generating Facility or increase in capacity of the existing Generating Facility will take longer than the regional expansion planning period. The In-Service Date may succeed the date the Interconnection Request is received by Transmission Provider by a period up to (10) ten years, or longer where Interconnection Customer and Transmission Provider agree, such agreement not to be unreasonably withheld.

4.4.3 Acknowledgment of Interconnection Request.

Transmission Provider shall acknowledge receipt of the Interconnection Request within five (5) Business Days of receipt of the request and attach a copy of the received Interconnection Request to the acknowledgement.

4.4.4 Deficiencies in Interconnection Request Under the Serial Interconnection Study Process.

An Interconnection Request will not be considered to be a valid request until all items in Section 4.4.1 have been received by Transmission Provider. If an Interconnection Request fails to meet the requirements set forth in Section 4.4.1, Transmission Provider shall notify Interconnection Customer within five (5) Business Days of receipt of the initial Interconnection Request of the reasons for such failure and that the Interconnection Request does not constitute a valid request. Interconnection Customer shall provide Transmission Provider the additional requested information needed to constitute a valid request within ten (10) Business Days after receipt of such notice. Failure by Interconnection Customer to comply with this Section 4.4.4 shall be treated in accordance with Section 4.7.

4.4.5 Deficiencies in Interconnection Request Under the Definitive Interconnection Study Process.

An Interconnection Request will not be considered to be a valid request until all items in Section 4.4.2 have been received by the Transmission Provider.

If an Interconnection Request fails to meet the requirements set forth in Section 4.4.2, Transmission Provider shall notify the Interconnection Customer within five (5) Business Days of receipt of the initial Interconnection Request of the reasons for such failure and that the Interconnection Request does not constitute a valid request. The Interconnection Customer shall provide Transmission Provider the additional requested information needed to constitute a valid request within ten (10) Business Days after receipt of such notice. At any time, if Transmission Provider identifies issues with technical data provided by the Interconnection Customer, Interconnection Customer and Transmission Provider shall work expeditiously and in good faith to remedy any data issues. Failure by the Interconnection Customer to comply with this Section 4.4.5 shall be treated in accordance with Section 4.7.

Transmission Provider shall determine if the information contained in the Interconnection Request is adequately sufficient to start the Definitive System Impact Study by the close of the Customer Engagement Window.

4.4.6 Scoping Meeting for Serial Interconnection Study Process.

Within ten (10) Business Days after receipt of a valid Interconnection Request, Transmission Provider shall establish a date agreeable to Interconnection Customer for the Scoping Meeting, and such date shall be no later than thirty (30) Calendar Days from receipt of the valid Interconnection Request, unless otherwise mutually agreed upon by the Parties.

The purpose of the Scoping Meeting shall be to discuss alternative interconnection options, to exchange information including any transmission data that would reasonably be expected to impact such interconnection options, to analyze such information and to determine the potential feasible Points of Interconnection. Transmission Provider and Interconnection Customer will bring to the meeting such technical data, including, but not limited to: (i) general facility loadings, (ii) general instability issues, (iii) general short circuit issues, (iv) general voltage issues, and (v) general reliability issues as may be reasonably required to accomplish the purpose of the meeting. Transmission Provider and Interconnection Customer will also bring to the meeting personnel and other resources as may be reasonably required to accomplish the purpose of the meeting in the time allocated for the meeting. On the basis of the meeting, Interconnection Customer shall designate its Point of Interconnection, pursuant to Section 4.4.1, and one or more available alternative Point(s) of Interconnection. The duration of the meeting shall be sufficient to accomplish its purpose.

4.4.7 Scoping Meeting for Definitive Interconnection Study Process.

Within ten (10) Business Days after the close of the DISIS Request Window described in Section 10.1, Transmission Provider shall host an open Scoping Meeting, for all Interconnection Requests received during that DISIS Request Window. If requested by the Interconnection Customer, Transmission Provider shall also hold individual customer specific Scoping Meetings, which must be requested no later than fifteen (15) Business Days after the close of the DISIS Request Window.

The purpose of the Scoping Meeting shall be to discuss alternative interconnection options, to exchange information, including any transmission data that would reasonably be expected to impact such interconnection options, to preliminarily analyze such information; and to determine the potential feasible Point(s) of Interconnection. Transmission Provider and Interconnection Customer will bring to the meeting such technical data, including, but not limited to: (i) general facility loadings, (ii) general instability issues, (iii) general short circuit issues, (iv) general voltage issues, and (v) general reliability issues as may be reasonably

required to accomplish the purpose of the meeting. Transmission Provider and Interconnection Customer will also bring to the meeting personnel and other resources as may be reasonably required to accomplish the purpose of the meeting in the time allocated for the meeting. On the basis of the meeting, Interconnection Customer shall designate a single, definitive Point of Interconnection, pursuant to Section 4.4.2. The duration of the meeting shall be sufficient to accomplish its purpose.

At Interconnection Customer's option, the Transmission Provider and Interconnection Customer will identify alternative Point(s) of Interconnection and configurations at the Scoping Meeting to evaluate in the DISIS Cluster Study Process and attempt to eliminate alternatives in a reasonable fashion given resources and information available. Interconnection Customer shall select a single definitive Point of Interconnection to be studied no later than the execution of the DISIS Agreement and shall provide affirmation of Site Control to construct the entire Generating Facility and all required Interconnection Facilities to the designated Point of Interconnection or the deposit in lieu of Site Control prescribed in Section 4.4.2 (c.) no later than commencement of the Phase 1 study process described in Section 10.8.

4.4.8 Initiating an Interconnection Request in the Generation Replacement Process.
An Interconnection Request for Generation Replacement shall be accompanied by: (i) a completed application in the form of Appendix 3 to the LGIP; (ii) a study deposit in the amount of $50,000.

4.5 OASIS Posting.
Transmission Provider will maintain on its OASIS a list of all Interconnection Requests. The list will identify, for each Interconnection Request: (i) the maximum summer and winter megawatt electrical output; (ii) the location by county and state; (iii) the station or transmission line or lines where the interconnection will be made; (iv) the projected In-Service Date; (v) the status of the Interconnection Request, including Queue Position and Cluster (if applicable); (vi) the type of Interconnection Service being requested; and (vii) the availability of any studies related to the Interconnection Request; (viii) the date of the Interconnection Request; (ix) the type of Generating Facility to be constructed (combined cycle, base load or combustion turbine and fuel type); and (x) for Interconnection Requests that have not resulted in a completed interconnection, an explanation as to why it was not completed. In addition, for a Generation Replacement, Transmission Provider will post the planned date of cessation of operation for the Existing Generating Facility or actual date if the Existing Generating Facility already has ceased commercial operations, the expected Commercial Operation Date of the Replacement Generating Facility, and the type of requested Interconnection Service. Except in the case of an Affiliate, the list will not disclose the identity of Interconnection Customer until Interconnection Customer executes an LGIA or requests that Transmission Provider file an unexecuted LGIA with FERC. Before holding a Scoping Meeting with its Affiliate, Transmission Provider shall post on OASIS an advance notice of its intent to do so. Transmission Provider shall post to its OASIS site any deviations from the study timelines set forth herein. Interconnection Study reports and Optional Interconnection Study reports shall be posted to Transmission Provider's OASIS site subsequent to the meeting between Interconnection Customer and Transmission Provider to discuss the applicable study results. Transmission Provider shall also post any known deviations in the Large Generating Facility's In-Service Date.

4.5.1 Requirement to Post Interconnection Study Metrics.

Transmission Provider will maintain on its OASIS or its website summary statistics related to processing Interconnection Studies pursuant to Interconnection Requests, updated quarterly. If Transmission Provider posts this information on its website, a link to the information must be provided on Transmission Provider's OASIS site. For each calendar quarter, Transmission Providers must calculate and post the information detailed in Sections 4.5.2 through 4.5.3.

4.5.2 Serial Interconnection Study Processing Metrics.

4.5.2.1 Feasibility Studies Processing Time.

(A) Number of Interconnection Requests that had Interconnection Feasibility Studies completed within Transmission Provider's Control Area during the reporting quarter;

(B) Number of Interconnection Requests that had Interconnection Feasibility Studies completed within Transmission Provider's Control Area during the reporting quarter that were completed more than 45 Calendar Days after receipt by Transmission Provider of the Interconnection Customer's executed Interconnection Feasibility Study Agreement;

(C) At the end of the reporting quarter, the number of active valid Interconnection Requests with ongoing incomplete Interconnection Feasibility Studies where such Interconnection Requests had executed Interconnection Feasibility Study Agreements received by Transmission Provider more than 45 Calendar Days before the reporting quarter end;

(D) Mean time (in Calendar Days), Interconnection Feasibility Studies completed within Transmission Provider's Control Area during the reporting quarter, from the date when Transmission Provider received the executed the Interconnection Feasibility Study Agreement to the date when Transmission Provider provided the completed Interconnection Feasibility Study to the Interconnection Customer;

(E) Percentage of Interconnection Feasibility Studies exceeding 45 Calendar Days to complete this reporting quarter, calculated as the sum of 4.5.2.1(B) plus 4.5.2.1(C) divided by the sum of 4.5.2.1(A) plus 4.5.2.1(C)).

4.5.2.2 Serial Interconnection System Impact Studies Processing Time.

(A) Number of Interconnection Requests that had Serial Interconnection System Impact Studies completed within Transmission Provider's Control Area during the reporting quarter;

(B) Number of Interconnection Requests that had Serial Interconnection System Impact Studies completed within Transmission Provider's Control Area during the reporting quarter that were completed more than 90 Calendar Days after receipt by Transmission Provider of the Interconnection Customer's executed Interconnection System Impact Study Agreement;

(C) At the end of the reporting quarter, the number of active valid Interconnection Requests with ongoing incomplete System Impact Studies where such Interconnection Requests had executed Interconnection System Impact Study Agreements received by Transmission Provider more than 90 Calendar Days before the reporting quarter end;

(D) Mean time (in Calendar Days), Serial Interconnection System Impact Studies completed within Transmission Provider's Control Area during the reporting quarter, from the date

when Transmission Provider received the executed Interconnection System Impact Study Agreement to the date when Transmission Provider provided the completed Interconnection System Impact Study to the Interconnection Customer;

(E) Percentage of Serial Interconnection System Impact Studies exceeding 90 Calendar Days to complete this reporting quarter, calculated as the sum of 4.5.2.2(B) plus 4.5.2.2(C) divided by the sum of 4.5.2.2(A) plus 4.5.2.2(C)).

4.5.3 Definitive Interconnection Study Processing Metrics.

4.5.3.1 Definitive Interconnection Study Phase 1 Processing Time.
(A) Number of Interconnection Requests that had DISIS Phase 1 Studies completed within Transmission Provider's Control Area during the reporting quarter;

(B) At the end of the reporting quarter, number of Interconnection Requests that had DISIS Phase 1 Studies completed within Transmission Provider's Control Area during the reporting quarter that were completed more than ninety (90) Calendar Days after Transmission Provider commenced the DISIS Phase 1 Study, the duration (in days) to complete the Phase 1 Study, and an explanation of why Transmission Provider's completion of the Phase 1 study exceeded the timeline set forth in Section 10.8(a.).

4.5.3.2 Definitive Interconnection Study Phase 2 Processing Time.
(A) Number of Interconnection Requests that had DISIS Phase 2 studies completed within Transmission Provider's Control Area during the reporting quarter;

(B) At the end of the reporting quarter, number of Definitive Interconnection Requests that had DISIS Phase 2 Studies completed within Transmission Provider's Control Area during the reporting quarter that were completed more than one hundred fifty (150) Calendar Days after Transmission Provider commenced the DISIS Phase 2 Study, the duration (in days) to complete the Phase 2 Study, and an explanation of why Transmission Provider's completion of the Phase 2 study exceeded the timeline set forth in Section 10.8(c.).

4.5.3.3 Definitive Interconnection Study Phase 3 Processing Time.
(A) Number of Interconnection Requests that were required to undergo DISIS Phase 3 restudies and number of Phase 3 restudies completed within Transmission Provider's Control Area during the reporting quarter;

(B) At the end of the reporting quarter, number of Definitive Interconnection Requests that had DISIS Phase 3 restudies completed within Transmission Provider's Control Area during the reporting quarter that were completed more than one hundred fifty (150) Calendar Days after Transmission Provider commences the DISIS Phase 3 Restudy, the duration (in days) to complete the Phase 3 Restudy, and explanation of why Transmission Provider's completion of the Phase 3 Restudy exceeded the timeline set forth in Section 10.8(e.).

4.5.4 Interconnection Facilities Studies Processing Time.
(A) Number of Interconnection Requests that had Interconnection Facilities Studies that are completed within Transmission Provider's Control Area during the reporting quarter;

(B) Number of Interconnection Requests that had Interconnection Facilities Studies that are completed within Transmission Provider's Control Area during the reporting quarter that

were completed (1) under the Serial Interconnection Study Process, more than (a) ninety (90) Calendar Days after receipt by Transmission Provider of the Interconnection Customer's executed Interconnection Facilities Study Agreement if Interconnection Customer requested a +/- 20% cost estimate in such study or (b) one hundred eighty (180) Calendar Days after receipt by Transmission Provider of the Interconnection Customer's executed Interconnection Facilities Study Agreement if Interconnection Customer requested a +/- 10% cost estimate in such study, or (2) under the Definitive Interconnection Study Process, more than one hundred fifty (150) Calendar Days after receipt by Transmission Provider of the Interconnection Customer's executed Interconnection Facilities Study Agreement;

(C) At the end of the reporting quarter, the number of active valid Interconnection Service requests with ongoing incomplete Interconnection Facilities Studies where such Interconnection Requests had executed Interconnection Facilities Studies Agreement received by Transmission Provider (1) under the Serial Interconnection Study Process, more than (a) ninety (90) Calendar Days after receipt by Transmission Provider of the Interconnection Customer's executed Interconnection Facilities Study Agreement if Interconnection Customer requested a +/- 20% cost estimate in such study or (b) one hundred eighty (180) Calendar Days before the reporting quarter end if Interconnection Customer requested a +/- 10% cost estimate in such study, or (2) under the Definitive Interconnection Study Process, more than one hundred fifty (150) Calendar Days after receipt by Transmission Provider of the Interconnection Customer's executed Interconnection Facilities Study Agreement;

(D) Mean time (in Calendar Days), for Interconnection Facilities Studies completed within Transmission Provider's Control Area during the reporting quarter, calculated from the date when Transmission Provider received the executed Interconnection Facilities Study Agreement to the date when Transmission Provider provided the completed Interconnection Facilities Study to the Interconnection Customer;

(E) Percentage of delayed Interconnection Facilities Studies this reporting quarter, calculated as the sum of 4.5.4(B) plus 4.5.4(C) divided by the sum of 4.5.4(A) plus 4.5.4(C)).

4.5.5 Interconnection Service Requests Withdrawn From Interconnection Queue.

(A) Number of Interconnection Service requests withdrawn from Transmission Provider's interconnection queue during the reporting quarter;

(B) Number of Interconnection Service requests withdrawn from Transmission Provider's interconnection queue during the reporting quarter before completion of any interconnection studies or execution of any interconnection study agreements;

(C) Number of Interconnection Service requests withdrawn from Transmission Provider's interconnection queue during the reporting quarter before completion of an Interconnection System Impact Study or Definitive Interconnection System Impact Study Agreement, as applicable;

(D) Number of Interconnection Service requests withdrawn from Transmission Provider's interconnection queue during the reporting quarter before completion of an Interconnection Facility Study;

(E) Number of Interconnection Service requests withdrawn from Transmission Provider's interconnection queue after execution of a generator interconnection agreement or Interconnection Customer requests the filing of an unexecuted, new interconnection agreement;

(F) Mean time (in Calendar Days), for all withdrawn Interconnection Service requests, from the date when the request was determined to be valid to when Transmission Provider received the request to withdraw from the queue.

4.5.6 Requirement to Post Interconnection Study Metrics.

Transmission Provider is required to post on OASIS or its website the measures detailed from Section 4.5.2 (applicable to Transmission Providers administering Serial Interconnection Study Process only), 4.5.3 (applicable to Transmission Providers administering Definitive Interconnection Study Process only), 4.5.4, and 4.5.5 for each calendar quarter within 30 Calendar Days of the end of the calendar quarter. Transmission Provider will keep the quarterly measures posted on OASIS or its website for three calendar years with the first required report to be in the first quarter of 2020. If Transmission Provider retains this information on its website, a link to the information must be provided on Transmission Provider's OASIS site.

4.5.7 Reporting Requirement for Late Studies.

In the event that any of the values calculated in paragraphs 4.5.2.1(E), 4.5.2.2(E) or 4.5.4(E) exceeds 25 percent for two consecutive calendar quarters, Transmission Provider will have to comply with the measures below for the next four consecutive calendar quarters and must continue reporting this information until Transmission Provider reports four consecutive calendar quarters without the values calculated in 4.5.2.1(E), 4.5.2.2(E) or 4.5.4(E)) exceeding 25 percent for two consecutive calendar quarters:

(i) Transmission Provider must submit a report to the Commission describing the reason for each study or group of clustered studies pursuant to an Interconnection Request that exceeded its deadline (i.e., 45, 90, 150 or 180 Calendar Days) for completion (excluding any allowance for Reasonable Efforts). Transmission Provider must describe the reasons for each study delay and any steps taken to remedy these specific issues and, if applicable, prevent such delays in the future. The report must be filed at the Commission within 45 Calendar Days of the end of the calendar quarter.

(ii) Transmission Provider shall aggregate the total number of employee hours and third party consultant hours expended towards interconnection studies within its Control Area that quarter and post on OASIS or its website. If Transmission Provider posts this information on its website, a link to the information must be provided on Transmission Provider's OASIS site. This information is to be posted within 30 Calendar Days of the end of the calendar quarter.

4.6 Coordination with Affected Systems.

Transmission Provider will coordinate the conduct of any studies required to determine the impact of the Interconnection Request on Affected Systems with Affected System Operators and, if possible, include those results (if available) in its applicable Interconnection Study within the time frame specified in this LGIP. Transmission Provider will include such Affected System Operators in all meetings held with Interconnection Customer as required

by this LGIP. Interconnection Customer will cooperate with Transmission Provider in all matters related to the conduct of studies and the determination of modifications to Affected Systems. A Transmission Provider which may be an Affected System shall cooperate with Transmission Provider with whom interconnection has been requested in all matters related to the conduct of studies and the determination of modifications to Affected Systems. It is the responsibility of the Affected System Operator to provide the requirements or potential impediments to providing the requested interconnection service, including a preliminary indication of the cost and length of time that would be necessary to (i) complete any interconnection studies and (ii) construct any necessary Interconnection Facilities and Network Upgrades needed to reliably interconnect at the requested service level.

4.7 Withdrawal.

Interconnection Customer may withdraw its Interconnection Request at any time by written notice of such withdrawal to Transmission Provider. In addition, if Interconnection Customer fails to adhere to all requirements of this LGIP, except as provided in Section 16.6 (Disputes), Transmission Provider shall deem the Interconnection Request to be withdrawn and shall provide written notice to Interconnection Customer of the deemed withdrawal and an explanation of the reasons for such deemed withdrawal. Upon receipt of such written notice, Interconnection Customer shall have fifteen (15) Business Days in which to either respond with information or actions that cures the deficiency or to notify Transmission Provider of its intent to pursue Dispute Resolution.

Withdrawal shall result in the loss of Interconnection Customer's Queue Position. If an Interconnection Customer disputes the withdrawal and loss of its Queue Position, then during Dispute Resolution, Interconnection Customer's Interconnection Request is eliminated from the Queue until such time that the outcome of Dispute Resolution would restore its Queue Position. An Interconnection Customer that withdraws or is deemed to have withdrawn its Interconnection Request shall pay to Transmission Provider all costs that Transmission Provider prudently incurs with respect to that Interconnection Request prior to Transmission Provider's receipt of notice described above. Interconnection Customer must pay all monies due to Transmission Provider before it is allowed to obtain any Interconnection Study data or results.

Transmission Provider shall (i) update the OASIS Queue Position posting and (i) refund to Interconnection Customer any of the refundable portion of Interconnection Customer's study deposit or study payments that exceeds the share of the costs that Transmission Provider has incurred, including interest calculated in accordance with Section 35.19a(a)(2) of FERC's regulations. In the event of such withdrawal, Transmission Provider, subject to the confidentiality provisions of Section 16.1, shall provide, at Interconnection Customer's request, all information that Transmission Provider developed for any completed study conducted up to the date of withdrawal of the Interconnection Request.

4.7.1 Definitive Interconnection Study Process – Withdrawal Penalty.

Where a Transmission Provider is administering a Definitive Interconnection Study Process and an Interconnection Customer notifies the Transmission Provider of its intended Interconnection Request withdrawal or it is deemed withdrawn, as provided for in Section 4.7, the Transmission Provider shall: (i) update the OASIS Queue Position posting; (ii) impose the Withdrawal Penalty described in this Section and calculated under the methodology in Section 4.7.1.1, (iii), refund any security after settling the final invoice as described in Section 10.11.6, (iv) refund to Interconnection Customer any of the refundable

portion of Interconnection Customer's study deposit or study payments that exceeds the share of the costs that Transmission Provider has incurred, including interest calculated in accordance with Section 35.19a(a)(2) of FERC's regulations. In the event of such withdrawal, Transmission Provider, subject to the confidentiality provisions of Section 16.1, shall provide, at Interconnection Customer's request, all information that Transmission Provider developed for any completed study conducted up to the date of withdrawal of the Interconnection Request.

An Interconnection Customer shall be subject to a Withdrawal Penalty if it withdraws its Interconnection Request from the Queue or the Generating Facility does not otherwise reach Commercial Operation unless the Transmission Provider determines consistent with Good Utility Practice that (1) the withdrawal does not negatively affect the timing or cost of equal or lower queued projects; (2) the cost responsibility identified for that Interconnection Customer in the current study report associated with new Network Upgrades to the Transmission Provider's System increased by more than twenty-five percent (25%) compared to the costs identified in the previous report; or (3) if the customer withdraws after the Interconnection Facilities Study report is published and before providing M5, and the cost responsibility for that Interconnection Customer identified in the Interconnection Facilities Study report increases by more than one hundred percent (100%) compared to the Phase 2 report.

4.7.1.1 Calculation of the Withdrawal Penalty.

If the Interconnection Customer provided a demonstration(s) of readiness at Readiness Milestones 1-4, as described in Sections 10.11.1, 10.11.2, 10.11.3, and 10.11.4, that Interconnection Customer's Withdrawal Penalty shall be equal to the higher of the study deposit or one (1) times its actual allocated cost of the Definitive Interconnection Study Process.

If the Interconnection Customer did not provide a demonstration(s) of readiness at Readiness Milestones 1-4, as described in Sections 10.11.1, 10.11.2, 10.11.3, and 10.11.4, that Interconnection Customer's Withdrawal Penalty shall be dependent on the Interconnection Customer's progression through the Section 10 Definitive Interconnection System Impact Study and the Section 11 Interconnection Facilities Study and shall be calculated as follows:

1. If the Interconnection Customer withdraws in DISIS Phase 1 (after M1, but before M2), the Withdrawal Penalty shall be the higher of the study deposit or two (2) times its actual allocated cost of the Definitive Interconnection Study Process. This amount shall be capped at one (1) million dollars.

2. If the Interconnection Customer withdraws in DISIS Phase 2 (after M2, but before M3), the Withdrawal Penalty shall be the higher of the study deposit or three (3) times its actual allocated cost of the Definitive Interconnection Study Process. This amount shall be capped at one and one half (1.5) million dollars.

3. If the Interconnection Customer withdraws after DISIS Phase 2 concludes but before the Interconnection Facilities Study commences (after M3, but before M4), the Withdrawal Penalty shall be the higher of the study deposit or five (5) times the Interconnection Customer's actual allocated cost of the Definitive Interconnection Study Process. This amount shall be capped at two (2) million dollars.

4. If the Interconnection Customer withdraws in the Interconnection Facilities Study (after M4, but before M5), the Withdrawal Penalty shall be the higher of the study deposit or seven (7) times the Interconnection Customer's actual allocated cost of the Definitive Interconnection Study Process. This amount shall be capped at two and a half (2.5) million dollars.

If the Interconnection Customer provided a deposit in lieu of Site Control for Phase 1 and withdraws before entering Phase 2, the Withdrawal Penalty is increased by an amount equal to $20,000 plus $500/MW, which is in addition to the amounts described above.

The Withdrawal Penalty for any Interconnection Customer that has executed an LGIA is the higher of the study deposit or nine (9) times its actual allocated cost of the Definitive Interconnection Study Process.

4.7.1.2 Distribution of the Withdrawal Penalty.

Any Withdrawal Penalty revenues shall be used to fund generation interconnection studies. Withdrawal Penalty revenues shall first be applied, in the form of a bill credit, to not-yet-invoiced study costs for other Interconnection Customers in the same cluster, and to the extent that such studies are fully credited, shall be applied to study costs of future clusters in Queue order. Withdrawn Interconnection Customers shall not receive a bill credit associated with Withdrawal Penalties. Distribution of Withdrawal Penalty revenues to a specific study shall not exceed the total actual study costs. Allocation of Withdrawal Penalty revenues within a cluster to a specific customer shall be comparable to the allocation of study costs described in Section 10.3. Specifically, the Withdrawal Penalty revenue distribution to each customer in a specific cluster, shall be (1) ten percent (10%) on a per capita basis based on number of Interconnection Requests in the applicable Cluster; and (2) ninety percent (90%) to Interconnection Customers on a pro-rata basis based on requested megawatts included in the applicable Cluster. Distribution of Withdrawal Penalty revenue associated with Readiness Milestone 5 shall not be distributed to the remaining customers in that cluster until all customers in that cluster have reached Commercial Operation and thereafter shall be distributed as described above. Transmission Provider shall not change the distribution of Withdrawal Penalty revenue without authorization by the Commission. Transmission Provider shall post the Withdrawal Penalty balance on its OASIS site.

4.8 Identification of Contingent Facilities.

4.8.1 Method for Identifying Contingent Facilities.

The following steps are to be taken by Transmission Provider to identify and list the Contingent Facilities, if any, upon which the Interconnection Customer's costs, timing, and study findings are dependent. Such list is to be provided to Interconnection Customer at the conclusion of either the Serial Interconnection System Impact Study performed pursuant to the requirements of Section 9 or the Definitive Interconnection System Impact Study performed pursuant to the requirements of Section 10 of this LGIP.

Step 1: In preparation for performing an Interconnection Customer's System Impact Study, Transmission Provider will employ the following three methods to identify potential contingent facilities:

(a) reviewing any applicable Interconnection Study associated with generating facilities that have a higher queued interconnection request and determining whether

any of those request(s) have unbuilt Interconnection Facilities and/or Network Upgrades that may be necessary to accommodate the Interconnection Customer's requested interconnection,

(b) reviewing its 10-year transmission expansion plan and identifying any planned upgrades to its System which may be necessary to accommodate the Interconnection Customer's requested interconnection, and

(c) coordinating with applicable Affected Systems to obtain from such Affected Systems any completed and available Affected System studies to determine what Contingent Facilities have been identified in such studies based on the Affected Systems' respective criteria.

Step 2: Using the methods identified in Step 1, Transmission Provider will make a list of potential contingent facilities that consist of

(a) any unbuilt Interconnection Facilities and/or Network Upgrades associated with higher queued interconnection requests that are identified as potentially necessary to accommodate the Interconnection Customer's requested interconnection,

(b) any of Transmission Provider's planned upgrades to its system that are identified as potentially necessary to accommodate the Interconnection Customer's requested interconnection, and

(c) any Contingent Facilities that have been identified in Affected System studies as potentially necessary to accommodate Interconnection Customer's requested interconnection.

Step 3: The Transmission Provider will, using the list of potential contingent facilities identified in Steps 2(a) and 2(b), conduct a flow impact analysis on such facilities based on the performance requirements set forth in NERC Reliability Standard TPL-001-4, Table 1 (Transmission System Planning Performance Requirements) or any successor applicable version of such Reliability Standard; provided, however, that the flow impact analysis is not necessary if the related modification or upgrade is the facility the generator is connecting to (effectively 100% flow impact).

Step 4: The criteria that shall apply to the flow impact analysis performed in Step 3 are as follows:

a. the MW size of the Interconnection Request (the distribution factor) and
b. the applicable MVA rating of the existing facility that is mitigated by the potential contingent facility

The thresholds that shall apply to the flow impact analysis performed in Step 3 are as follows:

a. 3% of the MW size of the Interconnection Request (the distribution factor) and
b. 1% of the applicable MVA rating of the existing facility that is mitigated by the potential contingent facility

If Transmission Provider's resulting analysis in accordance with Step 3 and applying the thresholds in this Step 4 demonstrates that the MW impact on the potential contingent facility is either (a) at least 3% of the MW size of the Interconnection Request (the distribution factor) or (b) at least 1% of the applicable MVA rating of the existing facility that is mitigated by the potential contingent facility then Transmission Provider shall deem such potential contingent facilities as Contingent Facilities.

Step 5: In the System Impact Study report, Transmission Provider will list the identified Contingent Facilities and explain why each listed Contingent Facility was identified as such by identifying (a) which threshold in Step 4 was exceeded and (b) the amount by which such threshold was exceeded, which will inform Interconnection Customer of its potential risk exposure should any such Contingent Facility be delayed or not built.

4.8.2 Estimates Available for Contingent Facilities.

Upon request of Interconnection Customer, Transmission Provider shall provide the estimated costs of Interconnection Facilities and/or Network Upgrades and estimated in-service completion times of each Contingent Facility identified in either the Serial Interconnection System Impact Study performed pursuant to Section 9 or the Definitive Interconnection System Impact Study pursuant to Section 10 of this LGIP, if, and to the extent, Transmission Provider determines that such information is readily available and not commercially sensitive.

4.8.3 Inclusion of Contingent Facilities in LGIA.

Any Contingent Facilities identified for Interconnection Customer at the conclusion of either the Serial Interconnection System Impact Study performed pursuant to Section 9 or the Definitive Interconnection System Impact Study pursuant to Section 10 of this LGIP, will subsequently be included in such Interconnection Customer's Large Generator Interconnection Agreement, to the extent they are still applicable.

4.9 Additional Requirements for Generation Replacement Requests.

4.9.1 Requirements for Generation Replacement Requests.

i) Any Replacement Generating Facility must connect to the Transmission System at the same electrical Point of Interconnection as the Existing Generating Facility.

ii) A request for Generation Replacement must be submitted to the Transmission Provider by the Interconnection Customer for its Existing Generating Facility (a) at least one (1) year prior to the date that the Existing Generating Facility will cease operation or (b) up to (1) one year after a unit is determined as an unplanned (forced) outage as reported to NERC through the Generating Availability Data System. The request shall include the planned or actual date of cessation of operation for the Existing Generating Facility and the expected Commercial Operation Date for the Replacement Generating Facility.

iii) The Interconnection Customer shall request only ERIS for the Replacement Generating Facility if the Existing Generating Facility has only ERIS. The request for NRIS for the Replacement Generating Facility, when the Existing Generating Facility has only ERIS, shall be submitted as a separate Interconnection Request and shall proceed through the review process in the same manner as an Interconnection Request for a new Generating Facility. The Interconnection Customer may request either ERIS or NRIS for the Replacement Generating Facility if the Existing Generating Facility has NRIS. Requests for ERIS or NRIS that exceed the amount of Interconnection Service

for the Existing Generating Facility shall be processed as a new Interconnection Request for the amount of such excess pursuant to Section 4.9.1.iv of this LGIP.

iv) If the Replacement Generating Facility requires Interconnection Service (MW) in excess of that of the Existing Generating Facility that is being replaced, Interconnection Customer shall initiate a separate Interconnection Request for Interconnection Service in an amount (MW) equal to the excess pursuant to Section 4.4 of the LGIP. Such separate Interconnection Request shall be assigned a new Queue Position and proceed through the study process in the same manner as an Interconnection Request for a new Generating Facility.

v) If the request for a Replacement Generating Facility requests less Interconnection Service (MW) than that of the Existing Generating Facility that is being replaced, then any future request for Interconnection Service for that Replacement Generating Facility shall be submitted as a separate Interconnection Request pursuant to Section 4.4 of the LGIP. Such separate Interconnection Request shall be assigned a new Queue Position and proceed through the study process in the same manner as an Interconnection Request for a new Generating Facility.

vi) No request for Generation Replacement may be made until twelve (12) months have elapsed from: (1) the date of any assignment of the LGIA applicable to the Existing Generating Facility; or (2) the date of sale or other transfer of such Existing Generating Facility. Upon submission of a request for Generation Replacement, the Interconnection Customer shall not sell or otherwise transfer the Existing Generating Facility, the Replacement Generating Facility, nor assign the applicable LGIA until such time as the Generation Replacement Coordinator completes evaluation of the request for Generation Replacement unless the Interconnection Customer first withdraws such request for Generation Replacement in writing. In the event that the Generation Replacement Coordinator notifies Interconnection Customer that the request for Generation Replacement has been granted, the prohibition on sale, transfer, or assignment shall be extended in accordance with Section 4.9.5 of this LGIP. For purposes of this Section 4.9.1(vi), prohibited assignments include assignments to affiliates pursuant to Article 19.1 of the LGIA, or any analogous provision in an applicable interconnection agreement.

A transfer, sale, or assignment of the Existing Generating Facility, Replacement Generating Facility, or applicable LGIA that violates this Section 4.9.1(vi) of the LGIP shall void the request for Generation Replacement.

vii) The request for Generation Replacement must include (1) a $50,000 study deposit and (2) an executed Generation Replacement Study Agreement in the form of Appendix 12. Approval of the Generation Replacement request is contingent on the results of the Replacement Impact Study. Generation Replacement Coordinator shall notify Interconnection Customer in writing when the Replacement
Generating Facility is accepted.

4.9.1.1 Requirements for Modification of Generation Replacement Requests.

A request for Generation Replacement can be modified any time before the LGIP Section 4.9.2 evaluation process is complete.

1) If the revised planned date of cessation of operation for the Existing Generating Facility is prior to the planned date of cessation of operation specified in the original request, a new

request for Generation Replacement must be submitted at least one (1) year prior to the date that the Existing Generating Facility is planned to cease operation.

2) If the revised expected Commercial Operation Date for the Replacement Generating Facility is after the expected Commercial Operation Date for the Replacement Generating Facility in the original request, a new request for Generation Replacement must be submitted at least one (1) year prior to the date that the Existing Generating Facility is planned to cease operation, unless the Existing Generating Facility is in forced outage.

4.9.2 Evaluation Process for Generation Replacement Requests.

The Transmission Provider will place requests for Generation Replacement in a separate Generation Replacement queue on a first come first served basis based upon the date that the Transmission Provider receives a complete Generation Replacement request. The Generation Replacement Coordinator will evaluate Generation Replacement requests in the order in which they are submitted. The evaluation will consist of two studies: i) a Replacement Impact Study as set forth in Section 4.9.2.1 of the LGIP, and ii) a Reliability Assessment Study as set forth in Section 4.9.2.2 of the LGIP.

The Generation Replacement Coordinator shall use Reasonable Efforts to complete the Replacement Impact Study and Reliability Assessment Study and share results with the Interconnection Customer within one hundred eighty (180) Calendar Days of the request.

4.9.2.1 Generation Replacement—Replacement Impact Study.
The Replacement Impact Study will include analyses to determine if the Generation Replacement has a material adverse impact on the Transmission System when compared to Existing Generating Facility. The Replacement Impact Study may include steady-state (thermal/voltage), reactive power, short circuit/fault duty, and stability analyses, as necessary, to ensure that required reliability conditions are studied. If the Replacement Impact Study identifies any materially adverse impact from operating the Replacement Generating Facility when compared to the Existing Generating Facility, the Generation Replacement Coordinator shall deem such impact as a Material Modification, and, in such an instance, if the Interconnection Customer wishes to move forward with its request, the Interconnection Customer must submit all information and milestone payments necessary for a valid Interconnection Request for a new Generating Facility pursuant to Section 4.4 of the LGIP.

4.9.2.2 Generation Replacement—Reliability Assessment Study.
The Reliability Assessment Study for the time period between the date that the Existing Generating Facility ceases commercial operations and the expected Commercial Operation Date of the Replacement Generating Facility shall evaluate the performance of the Transmission System to determine if thermal and/or voltage violations of Applicable Reliability Standards and Transmission Owner planning criteria are caused by removing the Existing Generating Facility from service prior to the expected Commercial Operation Date of the Replacement Generating Facility. This study shall compare the conditions on the Transmission System that would exist if the Existing Generating Facility is taken offline to the conditions on the Transmission System as they exist when the Existing Generating Facility is online. The scope of Reliability Assessment Study may include stability analysis as necessary. The Existing Generating Facility shall be responsible for mitigating any reliability violation identified in the Reliability Assessment Study and may not cease

operations until all mitigations are implemented or are in service. Mitigation for this interim period may, as applicable, include: (i) redispatch/reconfiguration through operator instruction, and (ii) remedial action scheme or any other operating steps depending upon the type of reliability violation identified.

4.9.3 Generation Replacement—Notice to Proceed.
An Interconnection Customer requesting Generation Replacement shall inform the Generation Replacement Coordinator within thirty (30) Calendar Days of receiving the results of the Replacement Impact Study and Reliability Assessment Study of its election to proceed. If the Interconnection Customer provides the Generation Replacement Coordinator notice to proceed, then either: (i) the Generation Replacement Coordinator will initiate a Generator Replacement Interconnection Facilities Study; or (ii) the Transmission Provider will tender a draft LGIA. If the Interconnection Customer fails to notify the Transmission Provider with its election to proceed within thirty (30) Calendar Days, then the Interconnection Request will be deemed withdrawn pursuant to Section 4.7 of this LGIP.

4.9.4 Scope of Generator Replacement Interconnection Facilities Study.

Within thirty (30) Calendar Days after the Interconnection Customer has notified the Generation Replacement Coordinator of its intent to proceed, the Generation Replacement Coordinator will determine whether it will conduct a Generator Replacement Interconnection Facilities Study, pursuant to Section 11 of the LGIP. The scope of such a Generator Replacement Interconnection Facilities Study will focus on the Interconnection Facilities for the Replacement Generating Facility. This Generator Replacement Interconnection Facilities Study will identify estimates for cost and the time required to construct the Interconnection Facilities. The Generation Replacement Coordinator shall use Reasonable Efforts to complete this portion of the Generator Replacement Interconnection Facilities Study within ninety (90) Calendar Days.

4.9.5 LGIA for Generation Replacement.
Consistent with the process described in Section 14 of the LGIP, Transmission Provider shall tender a draft LGIA or, if deemed appropriate, an amended LGIA that conforms to the LGIA in effect at the time, within thirty (30) Calendar Days after the Interconnection Customer has notified the Generation Replacement Coordinator of its intent to proceed if a Generator Replacement Interconnection Facilities Study is not required, or within thirty (30) Calendar Days after final the Generator Replacement Interconnection Facilities Study report is provided to the Interconnection Customer. The draft LGIA shall include updated appendices describing the timing of Generation Replacement and a condition that the LGIA cannot be assigned and the Replacement Generating Facility cannot be transferred to any other Party, including an affiliate of the Interconnection Customer, until the Commercial Operation Date of the Replacement Generating Facility. A transfer, sale, or assignment of the Existing Generating Facility, Replacement Generating Facility, or applicable LGIA that violates this Section 4.9.5 shall be void and constitute a material breach of the LGIA.

Section 5. Queue Position and Queue Processing.

5.1 Serial Interconnection Study Process Queue Position.

Where the Transmission Provider is administering a Serial Interconnection Study Process, Transmission Provider shall assign a Queue Position based upon the date and time of receipt of the valid Interconnection Request; provided that, if the sole reason an Interconnection

Request is not valid is the lack of required information on the application form, and Interconnection Customer provides such information in accordance with Section 4.4.4, then Transmission Provider shall assign Interconnection Customer a Queue Position based on the date the application form was originally filed. Moving a Point of Interconnection shall result in a lowering of Queue Position if it is deemed a Material Modification under Section 5.4.

The Queue Position of each Interconnection Request will be used to determine the order of performing the Interconnection Studies and determination of cost responsibility for the facilities necessary to accommodate the Interconnection Request. A higher queued Interconnection Request is one that has been placed "earlier" in the queue in relation to another Interconnection Request that is lower queued.

5.1.1 Serial Interconnection Study Process – Clustering.

At Transmission Provider's option, Interconnection Requests may be studied serially or in clusters for the purpose of the Serial Interconnection System Impact Study.

Clustering shall be implemented on the basis of Queue Position. If Transmission Provider administering the Serial Interconnection Study Process elects to study Interconnection Requests using Clustering, all Interconnection Requests received within a period not to exceed one hundred and eighty (180) Calendar Days, hereinafter referred to as the "Queue Cluster Window" shall be studied together without regard to the nature of the underlying Interconnection Service, whether Energy Resource Interconnection Service or Network Resource Interconnection Service. The deadline for completing all Serial Interconnection System Impact Studies for which a Serial Interconnection System Impact Study Agreement has been executed during a Queue Cluster Window shall be in accordance with Section 9.4, for all Interconnection Requests assigned to the same Queue Cluster Window. Transmission Provider may study an Interconnection Request separately to the extent warranted by Good Utility Practice based upon the electrical remoteness of the proposed Large Generating Facility.

Clustering Serial Interconnection System Impact Studies shall be conducted in such a manner to ensure the efficient implementation of the applicable regional transmission expansion plan in light of the Transmission System's capabilities at the time of each study.

The Queue Cluster Window shall have a fixed time interval based on fixed annual opening and closing dates. Any changes to the established Queue Cluster Window interval and opening or closing dates shall be announced with a posting on Transmission Provider's OASIS beginning at least one hundred and eighty (180) Calendar Days in advance of the change and continuing thereafter through the end date of the first Queue Cluster Window that is to be modified.

5.2 Definitive Interconnection Study Process Queue Position.

Where the Transmission Provider is administering a Definitive Interconnection Study Process, the Transmission Provider shall assign a Queue Position to each Interconnection Request as follows: the Queue Position within the Queue shall be assigned based upon the date and time of receipt of all items required pursuant to the provisions of Section 4.4 during the annual DISIS Request Window described in Section 10.1. There is no queue for Informational Interconnection Studies.

A higher Queue Position assigned to an Interconnection Request is one that has been placed "earlier" in the Queue in relation to another Interconnection Request that is assigned a lower Queue Position. All requests studied in a single Cluster shall be considered equally queued but Clusters initiated earlier in time shall be considered to have a higher Queue Position than clusters initiated later. The Queue Position of an Interconnection Request shall have no bearing on the allocation of the cost of the shared Network Upgrades and Transmission Provider's Interconnection Facilities identified in the applicable Cluster study (such costs will be allocated among Interconnection Requests in accordance with Section 10.4). Moving a Point of Interconnection shall result in the withdrawal of the Interconnection Request and loss of the corresponding Queue Position if it is deemed a Material Modification under Section 5.4.

5.3 Transferability of Queue Position.

An Interconnection Customer may transfer its Queue Position to another entity only if such entity acquires the specific Generating Facility identified in the Interconnection Request and the Point of Interconnection does not change.

5.4 Modifications.

Interconnection Customer shall submit to Transmission Provider, in writing, modifications to any information provided in the Interconnection Request. Interconnection Customer shall retain its Queue Position if the modifications are in accordance with Sections 5.4.1, 5.4.2, 5.4.3, or 5.4.5, or are determined not to be Material Modifications pursuant to Section 5.4.3.

Notwithstanding the above, during the course of the Interconnection Studies, either Interconnection Customer or Transmission Provider may identify changes to the planned interconnection that may improve the costs and benefits (including reliability) of the interconnection, and the ability of the proposed change to accommodate the Interconnection Request. Subject to the forgoing sentence, and provided, however, they do not result in a Material Modification, to the extent the identified changes are acceptable to Transmission Provider, Interconnection Customer and potentially impacted Interconnection Customers in the same Cluster, such acceptance not to be unreasonably withheld, Transmission Provider shall modify the Point of Interconnection and/or configuration in accordance with such changes and proceed with any re-studies necessary to do so in accordance with Section 9.6, Section 10.8(e.), and Section 10.10 as applicable and Interconnection Customer shall retain its Queue Position.

5.4.1 Material Modifications Prior to System Impact Study Agreement Execution.

Prior to (a) the return of the executed Serial Interconnection System Impact Study Agreement to Transmission Provider or (b) no later than forty (40) Calendar Days after the close of the DISIS Request Window and prior to the return of the executed Definitive Interconnection System Impact Study Agreement to Transmission Provider, modifications permitted under this Section shall include specifically: (a) a decrease of up to 60 percent of electrical output (MW) of the proposed project; through either (1) a decrease in plant size of (2) a decrease in Interconnection Service level (consistent with the processes described in Section 4.1) accomplished by applying Transmission Provider-approved injection-limiting equipment; (b) modifying the technical parameters associated with the Large Generating Facility technology or the Large Generating Facility step-up transformer impedance characteristics; and (c) modifying the interconnection configuration. For plant increases, the incremental increase in plant output will go to the end of the queue for the purposes of cost allocation and study analysis.

5.4.2 Material Modifications Prior to Facilities Study Agreement Execution.

Prior to the return of the executed Serial Interconnection Facilities Study Agreement or Definitive Interconnection Facilities Study Agreement (as the case may be) to the Transmission Provider, the modifications permitted under this Section shall include specifically: (a) additional 15 percent decrease of electrical output of the proposed project through either (1) a decrease in plant size (MW) or (2) a decrease in Interconnection Service level (consistent with the process described in Section 4.1) accomplished by applying Transmission Provider-approved injection-limiting equipment;, and (b) Large Generating Facility technical parameters associated with modifications to Large Generating Facility technology and transformer impedances; provided, however, any incremental re-study costs or shifts in Network Upgrade costs associated with those modifications that would increase costs assigned to other Interconnection Customers within the same Cluster shall not be allocated pursuant to Sections 10.3 and 10.4 of this LGIP, and, instead, are the responsibility of and shall be fully assigned to the requesting Interconnection Customer; and (c) a Permissible Technological Advancement for the Large Generating Facility after the submission of the Interconnection Request. Section 5.4.5 specifies a separate technological change procedure including the requisite information and process that will be followed to assess whether the Interconnection Customer's proposed technological advancement is a Material Modification. Section 1 contains a definition of Permissible Technological Advancement.

5.4.3 Modification Inquiry Process.

Prior to making any modification other than those specifically permitted by Sections 5.4.1, 5.4.2, 5.4.3, and 5.4.5, Interconnection Customer may first request that Transmission Provider evaluate whether such modification is a Material Modification. In response to Interconnection Customer's request, Transmission Provider shall evaluate the proposed modifications prior to making them and inform Interconnection Customer in writing of whether the modifications would constitute a Material Modification. Any change to the Point of Interconnection, except those deemed acceptable under Sections 5.4.1, 5.4.2, 9.2, 10.7 or so allowed elsewhere, shall constitute a Material Modification. Interconnection Customer may then withdraw the proposed modification or proceed with a new Interconnection Request for such modification.

5.4.4 Receipt of Request for Modification. Upon receipt of Interconnection Customer's request for modification permitted under this Section 5.4, Transmission Provider shall commence and perform any necessary additional studies as soon as practicable, but in no event shall Transmission Provider commence such studies later than thirty (30) Calendar Days after receiving notice of Interconnection Customer's request.

5.4.5 Commercial Operation Date. Extensions of less than three (3) cumulative years in the Commercial Operation Date of the Large Generating Facility to which the Interconnection Request relates are not material and should be handled through construction sequencing. The initial requested Commercial Operation Date used for this calculation is determined from the date proposed in the initial Interconnection Request (Revised LGIP Appendix 3). Such cumulative extensions are inclusive of extensions requested after execution by Interconnection Customer of the LGIA.

5.4.6 Technological Change Procedure.

The technological change procedure included in this Section 5.4.6 will be followed to assess whether Interconnection Customer's proposed modification is a Material Modification.

5.4.6.1 Technological Change Request.

If an Interconnection Customer seeks to incorporate a technological advancement into its existing Interconnection Request, it must submit a Technological Change Request ("TCR") as described below to the Transmission Provider in writing any time prior to the return of the signed Interconnection Facilities Study Agreement.

The Interconnection Customer's TCR shall include a description of the proposed change, a $10,000 study deposit, and the following information: (1) updated technical data called for in Attachment A of Appendix 1; (2) type and specifications of equipment being replaced; (3) updated modeling information; (4) make and model of new equipment; (5) dynamic, steady-state and performance characteristics of the new equipment; (6) efficiencies, impedances, and ratings of the equipment; and (7) technical analysis demonstrating that the technological change would (i) result in electrical performance that is equal to or better than the electrical performance expected prior to the technological change, and (ii) not cause any reliability concerns (i.e., would not materially impact the Transmission System with regard to short circuit capability limits, steady-state thermal and voltage limits, or dynamic system stability and response). The Interconnection Customer's analysis should contain engineering evidence and reasoning that clearly demonstrates that the proposed change aligns with the definition of a Permissible Technological Advancement.

Upon receipt by the Transmission Provider of a completed TCR from the Interconnection Customer, the Transmission Provider will evaluate the TCR to determine whether the TCR is a Permissible Technological Advancement or if it necessitates the performance of additional analyses and/or studies. If the TCR is determined to have no adverse effect on electrical parameters or performance, then the TCR will not be considered a Material Modification, but rather will be deemed a Permissible Technological Advancement.

If the Transmission Provider determines that additional analyses and/or studies are required, Transmission Provider's studies may include steady-state, reactive

power, short circuit, stability analysis and any other appropriate studies that the Transmission Provider deems necessary based on the Transmission Provider's engineering judgement.

These additional studies and/or analyses will determine whether the technological advancement results in electrical performance that is equal to or better than the electrical performance expected prior to the TCR and be deemed a Permissible Technological Advancement, or if the technological advancement is deemed a Material Modification. Transmission Provider shall complete the evaluation as soon as practical but no later than thirty (30) Calendar Days after the receipt of the completed TCR.

Transmission Provider will produce a report that will state if the technological change is permissible. If the proposed technology fails to meet the definition of a Permissible Technological Advancement, then the TCR is deemed to be a Material Modification. In such cases, the study report shall provide an explanation regarding why the technological change is a Material Modification. The Interconnection Customer can choose to abandon the request and retain its queue position or choose to proceed with the request and reenter the queue with a new queue position.

If the study determines that the proposed technology meets the definition of a Permissible Technological Advancement, the modification is approved and will be incorporated into the Interconnection Request. Study reports may be updated if appropriate. Once the Permissible Technological Advancement is approved and incorporated into the Interconnection Request, a new TCR would be required for the Interconnection Customer to revert back to the original equipment or to make additional modifications to equipment.

Transmission Provider shall either refund any overage or charge for any shortage for costs of the study that exceed the deposit amount. The studies associated with the TCR shall be billed separately from other Interconnection Studies.

Section 6. Procedures for Interconnection Requests Submitted Prior to Effective Date of Standard Large Generator Interconnection Procedures.

6.1 Queue Position for Pending Requests.

6.1.1 Any Interconnection Customer assigned a Queue Position prior to the effective date of this LGIP shall retain that Queue Position.

6.1.1.1 If an Interconnection Study Agreement has not been executed as of the effective date of this LGIP, then such Interconnection Study, and any subsequent Interconnection Studies, shall be processed in accordance with this LGIP.

6.1.1.2 If an Interconnection Study Agreement has been executed prior to the effective date of this LGIP, such Interconnection Study shall be completed in accordance with the terms of such agreement, except where Transmission Provider initiates a transition to a Definitive Interconnection Study Process as prescribed in Section 7.

6.1.1.3 If an LGIA has been submitted to FERC for approval before the effective date of the LGIP, then the LGIA would be grandfathered.

6.2 New Transmission Provider.

If Transmission Provider transfers control of its Transmission System to a successor Transmission Provider during the period when an Interconnection Request is pending, the original Transmission Provider shall transfer to the successor Transmission Provider any amount of the deposit or payment with interest thereon that exceeds the cost that it incurred to evaluate the request for interconnection. Any difference between such net amount and the deposit or payment required by this LGIP shall be paid by or refunded to the Interconnection Customer, as appropriate. The original Transmission Provider shall coordinate with the successor Transmission Provider to complete any Interconnection Study, as appropriate, that the original Transmission Provider has begun but has not completed. If Transmission Provider has tendered a draft LGIA to Interconnection Customer but Interconnection Customer has not either executed the LGIA or requested the filing of an unexecuted LGIA with FERC, unless otherwise provided, Interconnection Customer must complete negotiations with the successor Transmission Provider.

Section 7. Transition Procedures for Definitive Interconnection Study Process.

Where the Transmission Provider publicizes its intent to transition to the Definitive Interconnection Study Process prescribed in Section 10 by posting notice to the OASIS website (the date of posting to be known as the "Cluster Study transition notice date"), such notice not to be published until after approval of the revised LGIP by FERC, an Interconnection Customer that has received a Queue Number but has not executed an Interconnection Agreement with the Transmission Provider prior to the Cluster Study transition notice date may elect to be studied under the Transition Procedures set forth in this section by executing a transitional study agreement (as applicable under Section 7.2) and meeting the requirements to enter the Transition Procedures study process. An Interconnection Customer electing to complete the study process under this section must notify the Transmission Provider and meet all Transitional readiness milestone requirements within sixty (60) Calendar Days of the delivery of notice of the Transmission Provider's transition to the Definitive Interconnection Study Process, such notice to be provided by the Transmission Provider in writing. If an Interconnection Customer elects to continue with a Transitional Serial Interconnection Facilities Study or a Transitional Cluster Study as described below, Transmission Provider shall retain the current study deposits, and Interconnection Customer shall be responsible for the entire cost of all studies pursuant to Sections 7.1, Section 7.2, and Section 11. An Interconnection Customer that does not meet the Transition Procedure requirements shall be deemed withdrawn pursuant to the Transition Procedures set forth in this section and then may submit a new Interconnection Request to be studied under the Definitive Interconnection Study Process.

7.1 Transitional Serial Process.

An Interconnection Customer that has a) a final System Impact Study Report that identifies the Interconnection Facilities and any Network Upgrades required to feasibly interconnect the proposed Generating Facility, and b) an Interconnection Facilities Study Agreement

executed by the Interconnection Customer prior to the Cluster Study transition notice date, may opt to continue with the serial Facilities Study process if the Interconnection Customer provides notice in writing to the Transmission Provider and meets each of the following requirements that demonstrate readiness within the timeframe prescribed in Section 7.

a) Execute a Transitional Serial Interconnection Facilities Study Agreement, as provided in Appendix 8-1;

b) Provide security equal to one hundred percent (100%) of the costs identified for Transmission Provider's Interconnection Facilities and Network Upgrades in the System Impact Study Report. The security shall be in the form of (a) cash; (b) an irrevocable letter of credit in a form reasonably acceptable to Transmission Provider; or (c) for amounts exceeding the potential Withdrawal Penalty to be assigned under this Section, other forms of security provided for in Section 11.5 of the LGIA (such as a surety bond) in a form reasonably acceptable to Transmission Provider. If the Interconnection Customer withdraws prior to executing an LGIA, the Transmission Provider shall be entitled to use the security as payment for (a) the final invoice for study costs and (b) the Withdrawal Penalty, after which any remaining amount of security shall be returned to Interconnection Customer. If the Interconnection Customer does not withdraw and executes an LGIA, the amount of security shall be increased or decreased as needed in order to reflect the cost estimate for Transmission Provider's Interconnection Facilities and Network Upgrades set forth in Appendix B to the LGIA. Once the LGIA is fully executed, the terms of the LGIA shall govern such security.

c) Demonstrate exclusive Site Control for the entire Generating Facility and any Interconnection Customer's Interconnection Facilities.

d) Interconnection Customer shall provide one of the following:

   i. A contract, binding upon the parties to the contract, for sale of the Generating Facility's energy, or the entire constructed Generating Facility, where the term of sale is not less than five (5) years, or

   ii. Reasonable evidence that the Generating Facility is included in a Resource Planning Entity's Resource Plan or has received a contract award in a Resource Solicitation Process, or

   iii. An executed Provisional Large Generator Interconnection Agreement filed with FERC. Such an agreement shall not be suspended and shall include a commitment to construct the Generating Facility.

The Transmission Provider shall complete the Transitional Serial Facilities Study pursuant to Section 11 except that the Readiness Milestone 4 requirement Section 11.2 shall not apply.

All LGIA negotiations shall be completed and the LGIA executed (or filed unexecuted) within sixty (60) Calendar Days of the publication of the final Interconnection Facilities Study Report or the Interconnection Request shall be deemed withdrawn pursuant to Section 4.7 unless extended by mutual agreement of Transmission Provider and Interconnection Customer. A change in the Commercial Operation Date shall not delay the construction of facilities if such delay negatively affects lower or equal queued projects.

If the Interconnection Customer elects to proceed under this Transitional Serial Process and subsequently withdraws its Interconnection Request or the Generating Facility otherwise does not reach Commercial Operation, a Withdrawal Penalty equal to nine (9) times the Interconnection Request's total study cost is imposed and the collected amount shall be distributed to fund future Cluster Study costs pursuant to Section 4.7.1.2, unless the Transmission Provider determines consistent with Good Utility Practice that a Withdrawal Penalty should not be assigned pursuant to Section 4.7.1.

7.2 Transitional Cluster Process.

7.2.1 Transitional Cluster Eligibility Requirements.

An Interconnection Customer with an assigned Queue Position prior to the Cluster Study transition notice date, may opt to enter the transitional cluster study ("Transitional Cluster Study") if the Interconnection Customer meets the requirements detailed below pursuant to the process established in Section 7. All Interconnection Customers who enter the Transitional Cluster Study shall be considered to have an equal Queue Position, and identified Network Upgrade costs shall be allocated according to Section 10.4 of this LGIP. The Transitional Cluster Study costs shall be allocated according to the method described in Section 10.3.

A Transitional Cluster Study general informational meeting open to all eligible Interconnection Customers shall be held within thirty (30) Calendar Days of the Cluster Study transition notice date. To join the Transitional Cluster Study, the Interconnection Customer must meet all of the following requirements within the timeframe prescribed in Section 7:

a) Execute a Transitional Cluster Study Agreement, as provided in Appendix 8-2;

b) Request either Energy Resource Interconnection Service or Network Resource Interconnection Service; provided, however, any Interconnection Customer requesting Network Resource Interconnection Service may also request that it be concurrently studied for Energy Resource Interconnection Service prior to Section 7.2.4 Transitional Cluster Facilities Study but must designate either ERIS or NRIS no later than five business days after the Transitional Cluster Phase 2 Report is issued;

c) Make a supplemental Interconnection Request study deposit in cash, if necessary, to increase the Interconnection Customer's total study deposit to equal the amount required under Section 4.1.2 of the LGIP;

d) Demonstrate that Interconnection Customer has exclusive Site Control for the entire Generating Facility and all required Interconnection Facilities to the Point of Interconnection to the Transmission Provider's System. Interconnection Customer may provide a cash deposit equal to $20,000 plus $500/MW in lieu of Site Control to enter Transitional Cluster Study Phase 1. A deposit in lieu of Site Control is not accepted for later Phases of the Transitional Cluster Study Process; and

e) Interconnection Customer shall provide one of the following:

i. Executed term sheet (or comparable evidence) related to a contract, binding upon the parties to the contract, for sale of the Generating Facility's energy, or the entire constructed Generating Facility, where the term of sale is not less than five (5) years, or

ii. Reasonable evidence that the Generating Facility is included in an Resource Planning Entity's Resource Plan or Resource Solicitation Process, or

iii. An executed Provisional Large Generator Interconnection Agreement filed with FERC that is not in suspension with 1) a commitment to construct the facility, 2) a Commercial Operation Date no later than 2024 and 3) a security deposit in addition to amount required under Section 4.1.2 where the total security deposit represents a reasonable estimation of the potential costs that could be ultimately allocated to the project in the Transitional Cluster Study, or

iv. Security equal to three million dollars ($3,000,000). The security shall be in the form of (a) cash; or (b) an irrevocable letter of credit in a form reasonably acceptable to Transmission Provider. If the Interconnection Customer withdraws prior to executing an LGIA, the Transmission Provider shall be entitled to use the security as payment for (a) the final invoice for study costs and (b) the Withdrawal Penalty, after which any remaining amount of security shall be returned to Interconnection Customer. If the Interconnection Customer does not withdraw and executes an LGIA, the amount of security shall be increased or decreased as needed in order to reflect the cost estimate for Transmission Provider's Interconnection Facilities and Network Upgrades set forth in Appendix B to the LGIA. Once the LGIA is fully executed, the terms of the LGIA shall govern such security.

7.2.2 Transitional Cluster Expedited Customer Engagement Process and Phase 1.
If one or more valid requests are received into the Transitional Cluster Study, the Transmission Provider shall undertake an expedited thirty (30) Calendar Day customer engagement process as provided for in Section 10.1 and shall then initiate a Phase 1 study under the procedures prescribed in Section 10.8 ("Transitional Cluster Study Phase 1") to evaluate the impact of the proposed interconnection(s) within the Transitional Cluster Study on the reliability of the Transition Provider's System. The Transmission Provider shall use Reasonable Efforts to complete the Transitional Cluster Study Phase 1 consisting of a power flow and voltage analysis within ninety (90) Calendar Days. The Transitional Cluster Study Phase 1 Report shall identify the Interconnection Facilities and Network Upgrades that are expected to be required as a result of the Interconnection Request(s) and provide a non-binding good-faith indicative estimate of cost responsibility and a non-binding good-faith estimated time to construct. The Transmission Provider will host a meeting to discuss the results of Transitional Cluster Study Phase 1 within ten (10) Calendar Days of issuing the Transitional Cluster Study Phase 1 Report.

An Interconnection Customer that withdraws the Interconnection Request from the Transitional Cluster during the Phase 1 study or within thirty (30) Calendar Days of the Transmission Provider's publication of the Transitional Cluster Study Phase 1 Report shall be assigned its allocated Phase 1 Study Costs calculated pursuant to Section 10.3 and shall not be allocated a Withdrawal Penalty. At any time after Phase 2 commences, the Interconnection Customer shall be subject to the Withdrawal Penalty identified in Section

7.2.6 and the collected amount shall be distributed to fund Transitional Cluster Study or future Cluster Study costs pursuant to Section 4.7.1.2, unless the Transmission Provider determines consistent with Good Utility Practice that a Withdrawal Penalty should not be assigned pursuant to Section 4.7.1. If the Interconnection Customer withdraws its Interconnection Request or the Generating Facility otherwise does not reach Commercial Operation, the deposit(s) required by Section 7.2.3 are fully refundable once the final invoice for study costs and Withdrawal Penalty is settled.

7.2.3 Transitional Cluster Study Phase 2.

Within thirty (30) Calendar Days of the Transmission Provider's publication of the Transitional Cluster Study Phase 1 Report, each Interconnection Customer electing to proceed with Phase 2 of the Transitional Cluster Study must meet all of the following requirements:

a) Provide security equal to three million dollars ($3,000,000) inclusive of any security previously required by Section 7.2.1(e.). The security shall be in the form of (a) cash; (b) an irrevocable letter of credit in a form reasonably acceptable to Transmission Provider; or (c) for amounts exceeding the potential Withdrawal Penalty to be assigned under Section 7.2.6, other forms of security provided for in Section 11.5 of the LGIA (such as a surety bond) in a form reasonably acceptable to Transmission Provider. If the Interconnection Customer withdraws prior to executing an LGIA, the Transmission Provider shall be entitled to use the security as payment for (a) the final invoice for study costs and (b) the Withdrawal Penalty, after which any remaining amount of security shall be returned to Interconnection Customer. If the Interconnection Customer does not withdraw and executes an LGIA, the amount of security shall be increased or decreased as needed in order to reflect the cost estimate for Transmission Provider's Interconnection Facilities and Network Upgrades set forth in Appendix B to the LGIA. Once the LGIA is fully executed, the terms of the LGIA shall govern such security.

b) Demonstrate exclusive Site Control for the entire Generating Facility and all required Interconnection Facilities to the Point of Interconnection on the Transmission Provider's Transmission System.

c) Interconnection Customer shall provide one of the following:

   i. A contract binding upon the parties to the contract, for sale of the Generating Facility's energy, or the entire constructed Generating Facility, where the term of sale is not less than five (5) years, or

   ii. Reasonable evidence that the Generating Facility is included in an Resource Planning Entity's Resource Plan and, if required, has filed an application for a Certificate of Public Convenience and Necessity to construct the Generating Facility or has been selected in a Resource Solicitation Process, or

   iii. An executed Provisional Large Generator Interconnection Agreement filed with FERC that is not in suspension with 1) a commitment to construct the Generating Facility, 2) a Commercial Operation Date no

later than 2024 and 3) a security deposit in addition to amount required under Section 4.1.2 where the total security deposit represents a reasonable estimation of the potential costs that could be ultimately allocated to the project in the transitional cluster study, or

iv. Provide additional security equal to two million dollars ($2,000,000). The security shall be in the form of (a) cash; (b) an irrevocable letter of credit in a form reasonably acceptable to Transmission Provider; or (c) for amounts exceeding the potential Withdrawal Penalty to be assigned under Section 7.2.6, other forms of security provided for in Section 11.5 of the LGIA (such as a surety bond) in a form reasonably acceptable to Transmission Provider. If the Interconnection Customer withdraws prior to executing an LGIA, the Transmission Provider shall be entitled to use the security as payment for (a) the final invoice for study costs and (b) the Withdrawal Penalty, after which any remaining amount of security shall be returned to Interconnection Customer. If the Interconnection Customer does not withdraw and executes an LGIA, the amount of security shall be increased or decreased as needed in order to reflect the cost estimate for Transmission Provider's Interconnection Facilities and Network Upgrades set forth in Appendix B to the LGIA. Once the LGIA is fully executed, the terms of the LGIA shall govern such security.

Once Transitional Cluster Study Phase 2 commences, the Transmission Provider shall complete an updated power flow/voltage analysis (if necessary), stability analysis and short circuit analysis for the Generating Facilities remaining in the Transitional Cluster Study pursuant to the procedures in Section 10.8(c.). The Transmission Provider shall use Reasonable Efforts to complete the Phase 2 analysis within one hundred fifty (150) Calendar Days. The results of this analysis shall identify the Interconnection Facilities and Network Upgrades expected to be required to reliably interconnect the Generating Facilities proceeding in the Transitional Cluster Study and shall provide a non-binding good-faith estimate of cost responsibility and a non-binding good-faith estimated time to construct. The Phase 2 Report shall identify each Interconnection Customer's estimated allocated costs for the Interconnection Facilities and Network Upgrades that would be borne by the Interconnection Customer under a future Interconnection Agreement.

If the Interconnection Customer withdraws the Interconnection Request at any time after Phase 2 commences, the Interconnection Customer shall be subject to the Withdrawal Penalty identified in Section 7.2.6 and the collected amount shall be distributed to fund future Cluster Study costs pursuant to Section 4.7.1.2, unless the Transmission Provider determines consistent with Good Utility Practice that a Withdrawal Penalty should not be assigned pursuant to Section 4.7.1.

7.2.4 Transitional Cluster Facilities Study.

If any Interconnection Customer within the Transitional Cluster Study withdraws its Interconnection Request after the Phase 2 Report is issued, the withdrawing Interconnection Customer shall be subject to the Withdrawal Penalty identified in Section 7.2.6 and the collected amount shall be distributed to fund re-study or future Cluster Study costs pursuant to Section 4.7.1.2, unless the Transmission Provider determines consistent with Good Utility Practice that a Withdrawal Penalty should not be assigned pursuant to Section 4.7.1. The Transmission Provider shall determine whether re-study of the Transitional Cluster

Generating Facilities is required pursuant to Section 10.10 prior to executing the Facilities Study Agreement and returning it to the Interconnection Customers.

The Transmission Provider shall complete the Facilities Study for all Generating Facilities in the Transitional Cluster Study within one hundred fifty (150) Calendar Days pursuant to Section 11 except that the Readiness Milestone 4 requirement in Section 11.2 shall not apply to Interconnection Customers participating in the Transitional Cluster Study.

7.2.5 Transitional Cluster LGIA.

After the Facility Study Report is published, the remaining process shall proceed according to Section 14 of this LGIP with the exception of the security required in item (b) of Section 14.4 (posting Readiness Milestone 5), which shall not apply. If the Interconnection Customer withdraws its Interconnection Request or if the Generating Facility otherwise does not reach Commercial Operation, the security is fully refundable once the final invoice for study costs and Withdrawal Penalty is settled.

All LGIA negotiations shall be completed and the LGIA executed (or filed unexecuted) within sixty (60) Calendar Days of the tender of the draft LGIA or the Interconnection Request is deemed withdrawn unless extended by mutual agreement of Transmission Provider and Interconnection Customer. A change in the Commercial Operation Date shall not delay the construction of Transmission Provider's Interconnection Facilities or Network Upgrades if such delay negatively affects lower or equal queued projects. The Withdrawal Penalty for Interconnection Customers participating in the Transitional Cluster Process that have executed an LGIA is listed in Section 7.2.6, and the collected amount shall be distributed to fund future Cluster Study costs pursuant to Section 4.7.1.2, unless the Transmission Provider determines consistent with Good Utility Practice that a Withdrawal Penalty should not be assigned pursuant to Section 4.7.1. If the Interconnection Customer withdraws its Interconnection Request or its Generating Facility or otherwise does not reach Commercial Operation, the deposit is fully refundable once the final invoice for study costs and Withdrawal Penalty is settled.

7.2.6 Transitional Cluster Withdrawal Penalty.

The Withdrawal Penalty for Interconnection Customers electing to proceed to Phase 2 of the Transitional Cluster Study is equal to nine (9) times the Interconnection Request's total study cost is imposed.

Section 8. Serial Interconnection Feasibility Study.

A Transmission Provider shall administer a Serial Interconnection Study Process under Section 8 (Feasibility Study), Section 9 (System Impact Study), and Section 11 (Facilities Study), unless and until the Transmission Provider has elected to transition to the Definitive Interconnection Study Process as described in Section 10. A Transmission Provider will provide notice on OASIS upon transitioning to the Definitive Interconnection Study Process pursuant to the process described in Section 7.

8.1 Serial Interconnection Feasibility Study Agreement.

Where a Transmission Provider administers the Serial Interconnection Study Process, Transmission Provider shall provide to Interconnection Customer an Interconnection Feasibility Study Agreement in the form of Appendix 4 simultaneously with the

acknowledgement of a valid Interconnection Request. The Interconnection Feasibility Study Agreement shall specify that Interconnection Customer is responsible for the actual cost of the Interconnection Feasibility Study. Within five (5) Business Days following the Scoping Meeting Interconnection Customer shall specify for inclusion in the attachment to the Interconnection Feasibility Study Agreement the Point(s) of Interconnection and any reasonable alternative Point(s) of Interconnection. Within five (5) Business Days following Transmission Provider's receipt of such designation, Transmission Provider shall tender to Interconnection Customer the Interconnection Feasibility Study Agreement signed by Transmission Provider, which includes a good faith estimate of the cost for completing the Interconnection Feasibility Study. Interconnection Customer shall execute and deliver to Transmission Provider the Interconnection Feasibility Study Agreement along with a $10,000 deposit no later than thirty (30) Calendar Days after its receipt.

On or before the return of the executed Interconnection Feasibility Study Agreement to Transmission Provider, Interconnection Customer shall provide the technical data called for in Appendix 4, Attachment A.

If the Interconnection Feasibility Study uncovers any unexpected result(s) not contemplated during the Scoping Meeting, a substitute Point of Interconnection identified by either Interconnection Customer or Transmission Provider, and acceptable to the other, such acceptance not to be unreasonably withheld, will be substituted for the designated Point of Interconnection specified above without loss of Queue Position, and Re-studies shall be completed pursuant to Section 8.4 as applicable. For the purpose of this Section 8.1, if Transmission Provider and Interconnection Customer cannot agree on the substituted Point of Interconnection, then Interconnection Customer may direct that one of the alternatives as specified in the Interconnection Feasibility Study Agreement, as specified pursuant to Section 4.1.1, shall be the substitute.

If Interconnection Customer and Transmission Provider agree to forgo the Serial Interconnection Feasibility Study, Transmission Provider will initiate a Serial Interconnection System Impact Study under Section 9 of this LGIP and apply the $10,000 deposit towards the Interconnection System Impact Study.

8.2 Scope of Serial Interconnection Feasibility Study.

The Interconnection Feasibility Study shall preliminarily evaluate the feasibility of the proposed interconnection to the Transmission System.

The Interconnection Feasibility Study will consider the Base Case as well as all generating facilities (and with respect to (iii), any identified Network Upgrades) that, on the date the Interconnection Feasibility Study is commenced: (i) are directly interconnected to the Transmission System; (ii) are interconnected to Affected Systems and may have an impact on the Interconnection Request; (iii) have a pending higher queued Interconnection Request to interconnect to the Transmission System; and (iv) have no Queue Position but have executed an LGIA or requested that an unexecuted LGIA be filed with FERC. The Interconnection Feasibility Study will consist of a power flow and short circuit analysis. The Interconnection Feasibility Study will provide a list of facilities and a non-binding good faith estimate of cost responsibility and a non-binding good faith estimated time to construct.

8.3 Serial Interconnection Feasibility Study Procedures.

Transmission Provider shall utilize existing studies to the extent practicable when it performs the study. Transmission Provider shall use Reasonable Efforts to complete the Interconnection Feasibility Study no later than forty-five (45) Calendar Days after Transmission Provider receives the fully executed Interconnection Feasibility Study Agreement. At the request of Interconnection Customer or at any time Transmission Provider determines that it will not meet the required time frame for completing the Interconnection Feasibility Study, Transmission Provider shall notify Interconnection Customer as to the schedule status of the Interconnection Feasibility Study. If Transmission Provider is unable to complete the Interconnection Feasibility Study within that time period, it shall notify Interconnection Customer and provide an estimated completion date with an explanation of the reasons why additional time is required. Upon request, Transmission Provider shall provide Interconnection Customer supporting documentation, workpapers and relevant power flow, short circuit and stability databases for the Interconnection Feasibility Study, subject to confidentiality arrangements consistent with Section 16.1.

Transmission Provider shall study the Interconnection Request at the level of service requested by the Interconnection Customer, unless otherwise required to study the full Generating Facility Capacity due to safety or reliability concerns.

8.3.1 Meeting with Transmission Provider.

Within ten (10) Business Days of providing an Interconnection Feasibility Study report to Interconnection Customer, Transmission Provider and Interconnection Customer shall meet to discuss the results of the Interconnection Feasibility Study.

8.4 Re-Study.

If Re-Study of the Interconnection Feasibility Study is required due to a higher queued project dropping out of the queue, or a modification of a higher queued project subject to Section 5.4, or re-designation of the Point of Interconnection pursuant to Section 8.1 Transmission Provider shall notify Interconnection Customer in writing. Such Re-Study shall take no longer than forty-five (45) Calendar Days from the date of the notice. Any cost of Re-Study shall be borne by the Interconnection Customer being re-studied.

Section 9. Serial Interconnection System Impact Study.

9.1 Serial Interconnection System Impact Study Agreement.

Unless otherwise agreed, pursuant to the Scoping Meeting provided in Section 4.4.6, simultaneously with the delivery of the Interconnection Feasibility Study to Interconnection Customer, Transmission Provider shall provide to Interconnection Customer a Serial Interconnection System Impact Study Agreement in the form of Appendix 5 to this LGIP. The Serial Interconnection System Impact Study Agreement shall provide that Interconnection Customer shall compensate Transmission Provider for the actual cost of the Serial Interconnection System Impact Study. Within three (3) Business Days following the Interconnection Feasibility Study results meeting, Transmission Provider shall provide to Interconnection Customer a non-binding good faith estimate of the cost and timeframe for completing the Interconnection System Impact Study.

9.2 Execution of Serial Interconnection System Impact Study Agreement.
Interconnection Customer shall execute the Serial Interconnection System Impact Study Agreement and deliver the executed Serial Interconnection System Impact Study Agreement to Transmission Provider no later than thirty (30) Calendar Days after its receipt along with demonstration of Site Control, and a $50,000 deposit.

If Interconnection Customer does not provide all such technical data when it delivers the Serial Interconnection System Impact Study Agreement, Transmission Provider shall notify Interconnection Customer of the deficiency within five (5) Business Days of the receipt of the executed Serial Interconnection System Impact Study Agreement and Interconnection Customer shall cure the deficiency within ten (10) Business Days of receipt of the notice, provided, however, such deficiency does not include failure to deliver the executed Serial Interconnection System Impact Study Agreement or deposit.

If the Serial Interconnection System Impact Study uncovers any unexpected result(s) not contemplated during the Scoping Meeting and the Interconnection Feasibility Study, a substitute Point of Interconnection identified by either Interconnection Customer or Transmission Provider, and acceptable to the other, such acceptance not to be unreasonably withheld, will be substituted for the designated Point of Interconnection specified above without loss of Queue Position, and restudies shall be completed pursuant to Section 9.6 as applicable. For the purpose of this Section 9.2, if Transmission Provider and Interconnection Customer cannot agree on the substituted Point of Interconnection, then Interconnection Customer may direct that one of the alternatives as specified in the Interconnection Feasibility Study Agreement, as specified pursuant to Section 4.1.1, shall be the substitute.

9.3 Scope of Serial Interconnection System Impact Study.
The Serial Interconnection System Impact Study shall evaluate the impact of the proposed interconnection on the reliability of the Transmission System. The Serial Interconnection System Impact Study will consider the Base Case as well as all generating facilities (and with respect to (iii) below, any identified Network Upgrades associated with such higher queued interconnection) that, on the date the Serial Interconnection System Impact Study is commenced: (i) are directly interconnected to the Transmission System; (ii) are interconnected to Affected Systems and may have an impact on the Interconnection Request; (iii) have a pending higher queued Interconnection Request to interconnect to the Transmission System; and (iv) have no Queue Position but have executed an LGIA or requested that an unexecuted LGIA be filed with FERC.

The Serial Interconnection System Impact Study will consist of a short circuit analysis, a stability analysis, and a power flow analysis. The Serial Interconnection System Impact Study will state the assumptions upon which it is based; state the results of the analyses; and provide the requirements or potential impediments to providing the requested interconnection service, including a preliminary indication of the cost and length of time that would be necessary to correct any problems identified in those analyses and implement the interconnection. For purposes of determining necessary Interconnection Facilities and Network Upgrades, the System Impact Study shall consider the level of Interconnection Service requested by the Interconnection Customer, unless otherwise required to study the full Generating Facility Capacity due to safety or reliability concerns. The Serial Interconnection System Impact Study will provide a list of facilities that are required as a result of the Interconnection Request and a non-binding good faith estimate of cost responsibility and a non-binding good faith estimated time to construct.

9.4 Serial Interconnection System Impact Study Procedures.

Transmission Provider shall coordinate the Serial Interconnection System Impact Study with any Affected System that is affected by the Interconnection Request pursuant to Section 4.6 above. Transmission Provider shall utilize existing studies to the extent practicable when it performs the study. Transmission Provider shall use Reasonable Efforts to complete the Serial Interconnection System Impact Study within ninety (90) Calendar Days after the receipt of the Serial Interconnection System Impact Study Agreement or notification to proceed, study payment, and technical data.

At the request of Interconnection Customer or at any time Transmission Provider determines that it will not meet the required time frame for completing the Serial Interconnection System Impact Study, Transmission Provider shall notify Interconnection Customer as to the schedule status of the Serial Interconnection System Impact Study. If Transmission Provider is unable to complete the Serial Interconnection System Impact Study within the time period, it shall notify Interconnection Customer and provide an estimated completion date with an explanation of the reasons why additional time is required. Upon request, Transmission Provider shall provide Interconnection Customer all supporting documentation, workpapers and relevant pre-Interconnection Request and post-Interconnection Request power flow, short circuit and stability databases for the Serial Interconnection System Impact Study, subject to confidentiality arrangements consistent with Section 16.1.

9.5 Meeting with Transmission Provider.

Within ten (10) Business Days of providing an Serial Interconnection System Impact Study report to Interconnection Customer, Transmission Provider and Interconnection Customer shall meet to discuss the results of the Interconnection System Impact Study.

9.6 Re-Study.

If Re-Study of the Serial Interconnection System Impact Study is required due to a higher queued project dropping out of the queue, or a modification of a higher queued project subject to Section 5.4, or re-designation of the Point of Interconnection pursuant to Section 9.2, Transmission Provider shall notify Interconnection Customer in writing. Such Re-Study shall take no longer than sixty (60) Calendar Days from the date of notice. Any cost of Re-Study shall be borne by the Interconnection Customer being re-studied.

Section 10. Definitive Interconnection Study Process.

For a Transmission Provider that has transitioned to the Definitive Interconnection Study Process under the procedure described in Section 7, the Transmission Provider shall annually administer a Definitive Interconnection System Impact Cluster Study Process as provided for in this Section. The diagram attached as Appendix 6-1 provides an overview and timeline of initiation of a Definitive Interconnection Study: the DISIS Request Window, Customer Engagement Window, and Phase 1 of the DISIS.

Interconnection Customers may initially elect to obtain an Informational Interconnection Study, as provided for under Section 3, prior to submitting an Interconnection Request and proceeding into the Definitive Interconnection Study Process. Interconnection Customers that elect to withdraw from the Definitive Interconnection Study Process may be subject to a Withdrawal Penalty, as further addressed in Section 4.7.1.

10.1 Initiation of a Definitive Interconnection System Impact Study Cluster.

The Transmission Provider shall accept Interconnection Requests during the "DISIS Request Window." A DISIS Request Window shall open annually on January 1 and shall remain open for 180 Calendar Days or the following Business Day if the 180th day falls on a weekend or NERC recognized holiday.

If one or more valid Interconnection Requests are received, for sixty (60) Calendar Days following the close of the DISIS Request Window (the "Customer Engagement Window"), the Transmission Provider shall work with applicable Interconnection Customers to build models, verify data, hold stakeholder meetings (including Scoping Meetings, as appropriate), cure any deficiencies in the Interconnection Request(s) as described in Section 4.4.5, and generally prepare for the start of the Definitive Interconnection System Impact Study. Notwithstanding the preceding sentence and upon written consent of all Interconnection Customers within a specific Cluster, the Transmission Provider may shorten the "Customer Engagement Window" in order to start the Definitive Interconnection System Impact Study earlier. Within the first ten (10) Business Days following the close of the DISIS Request Window, the Transmission Provider shall post on its OASIS site a list of Interconnection Requests for that Cluster, identifying for each Interconnection Request: (i) the location by county and state; (ii) the transmission substation or transmission line or lines where the interconnection will be made; (iii) cluster being requested; and (iv) the type of Generating Facility to be constructed including fuel type such as wind, natural gas, coal, or solar.

Prior to the close of the Customer Engagement Window, each Interconnection Customer shall i) execute a DISIS Agreement pursuant to Section 10.6; ii) provide initial security equal to 1 times the Section 4.1.2 study deposit amount to enter the DISIS; and iii) provide evidence satisfactory to the Transmission Provider of either an initial Readiness Milestone ("M1"), as described in Section 10.11.1, or additional security in the form of an irrevocable letter of credit or cash in lieu of the M1 Readiness Milestone equal to one times the Study Deposit required in Section 10.11.6.

At the end of the Customer Engagement Window, all Interconnection Requests meeting the foregoing readiness requirements and that have an executed DISIS Agreement shall be included in that DISIS Cluster. Any Interconnection Requests not deemed sufficient pursuant to Section 4.4.5 or that are undergoing dispute resolution pursuant to Section 16.6 at the close of the Customer Engagement Window shall not be included in the commencing DISIS Cluster. Immediately following the Customer Engagement Window, the Transmission Provider shall initiate the Definitive Interconnection System Impact Study process described in more detail in Section 10.

10.2 Initiation of a Resource Solicitation Cluster.

At any time, and upon request of a Resource Planning Entity, a Transmission Provider may initiate a Resource Solicitation Cluster. Within ten (10) Business Days of receipt of a request to perform a Resource Solicitation Cluster that includes valid Interconnection Requests as described in Section 4.4, Transmission Provider and Resource Planning Entity shall meet to determine a mutually agreeable scope of study and timeframe to initiate the Resource Solicitation Cluster.

The Transmission Provider may administer the Resource Solicitation Cluster either separately or as part of a Definitive Interconnection System Impact Study Cluster initiated pursuant to Section 10.2. Where the Resource Solicitation Cluster is studied separately from

the Definitive Interconnection System Impact Study Cluster, the Resource Solicitation Cluster shall respect Queue Position and shall be studied as its own Cluster based upon a Resource Planning Entity-designated Queue Number where the Resource Planning Entity acts as authorized representative for Interconnection Customer(s) in connection with a Resource Solicitation Cluster and the Transmission Provider shall Study the Cluster based upon the Queue Number of the Resource Solicitation Cluster relative to the Queue Position of all other Interconnection Requests/Clusters.

The Transmission Provider shall publicize the scope of study and timeframe to initiate the Resource Solicitation Cluster. The timeline shall indicate the close of the Customer Engagement Window for that Resource Solicitation Cluster. Where the Transmission Provider is administering the Resource Solicitation Cluster as part of a Definitive Interconnection System Impact Study Cluster the Definitive Interconnection System Impact Study shall proceed as described in Section 10.

After Transmission Provider completes the Definitive Interconnection System Impact Studies for the requested combinations, the results will be provided (Phase 1 Report, Phase 2 Report, Phase 3 Report, etc.; as applicable under Section 10.8) to the Resource Planning Entity for use in the Resource Solicitation Process. The results will be posted on Transmission Provider's OASIS consistent with the posting of other study results.

A Generating Facility that initially is associated with a Queue Position through the Resource Solicitation Process may also reserve a later Queue Position separate from the Resource Solicitation Cluster. In either case, the Interconnection Customer must meet all requirements associated with maintaining each Queue Position for the Generating Facility. In the event a Generating Facility has multiple Queue Positions, it shall not be double counted in the study models.

After receipt of the Phase 2 Report, the Resource Planning Entity must select one of the studied combinations in the Resource Solicitation Process prior to the commencement of any Facilities Study associated with Generating Facilities selected in the Resource Solicitation Process. Prior to the completion of the Facilities Study for the combination of Generating Facilities selected, the Resource Planning Entity may replace Interconnection Customers, subject to any necessary Re-Study pursuant to Sections 10.8(e.) or 10.10. While conducting the Definitive Interconnection Study Process, the Transmission Provider may suspend further action on the Interconnection Requests in the Resource Solicitation Process that are not included in the selected combination. Once a Generating Facility is rejected in a Resource Solicitation Cluster Process administered separately from a Definitive Interconnection System Impact Study Cluster, the Generating Facility shall lose the Queue Position it held as part of the Resource Solicitation Process. If a Generating Facility is selected by the Resource Planning Entity at the conclusion of the Resource Solicitation Process, the Generating Facility may no longer maintain more than one Queue Position

10.3 Definitive Interconnection Study Process Study Cost Allocation.

The administering Transmission Provider shall determine each Interconnection Customer's share of the costs of completing the DISIS Cluster Study (including general queue administration costs and overheads) by allocating: (1) ten percent (10%) of the applicable study costs to Interconnection Customers on a per capita basis based on number of Interconnection Requests included in the applicable Cluster; and (2) ninety percent (90%) of the applicable study costs to Interconnection Customers on a pro-rata basis based on

requested megawatts included in the applicable Cluster. If an Interconnection Customer exits the Cluster prior to the Transmission Provider commencing Phase 2 pursuant to Section 10.8(c.) (including where the Transmission Provider determines through Phase 1 that a distribution-level System Impact Study should be completed for one or more distribution-level Interconnection Customers in lieu of being evaluated through Phase 2), then the Transmission Provider shall determine each Interconnection Customer's costs of preparing for and completing the DISIS prior to commencing Phase 2 and shall then separately determine each remaining Interconnection Customer's costs for the remainder of the DISIS.

If a Phase 3 restudy or general restudy is required pursuant to Sections 10.8(e) or 10.10, then Transmission Provider shall allocate the costs of the restudy as provided for in this section amongst the Interconnection Customers included in the restudy. If an Interconnection Customer proposes non-material changes to its Interconnection Request requiring limited restudy, the costs of the limited restudy shall be directly assigned to the requesting Interconnection Customer. The Facilities Study for a Transmission Provider administering the Definitive Interconnection Study Process is an individual study and the costs for each Facilities Study is directly assigned to the Interconnection Customer associated with such study.

10.4 Transmission Provider's Interconnection Facilities and Network Upgrade Cost Allocation.

The Transmission Provider shall calculate each Interconnection Customer's share of Upgrades and Interconnection Facilities costs identified in Cluster Studies in the following manner:

a) Station equipment Network Upgrades, including all switching stations, shall be allocated based on the number of Generating Facilities interconnecting at an individual station on a per capita basis (i.e. on a per Interconnection Request basis). If multiple Interconnection Customers are connecting to the Transmission Provider's Transmission System through shared Interconnection Facility(ies), those Interconnection Customers shall be considered one Interconnection Customer for the per capita calculation described in the preceding sentence. Shared Interconnection Facilities shall be allocated based on the number of Generating Facilities sharing that Interconnection Facility on a per capita basis.

b) All Network Upgrades other than those identified in Section 10.8(a.) shall be allocated based on the proportional impact of each individual Generating Facility in the Cluster Studies on such Network Upgrades. The proportional impact of such Network Upgrades shall be calculated as follows. All transmission lines and transformers identified as Network Upgrades shall be allocated using distribution factor analysis. Voltage support related Network Upgrades shall be allocated using a voltage impact analysis which will identify each Generating Facility's contribution to the voltage violation. Network Upgrades associated with upgrading existing breakers due to short circuit current exceeding breaker capability shall be allocated proportionally based on the short circuit current contribution of each request.

c) Costs of Distribution Upgrades shall be allocated or assigned to each Interconnection Customer based upon the proportional impact of each individual Generating Facility in the Cluster Study based upon the need for the Distribution Upgrade. Distribution line work (e.g., reconductoring) shall be allocated to Generating Facilities contributing to the Upgrade on a per MW basis, based upon location (% of Upgrade). All other Distribution

Upgrades shall be allocated on a per capita basis (i.e. on a per Interconnection Request basis) based upon the number of projects on the feeder or substation contributing to the need for the Upgrade.

d) Costs of Transmission Provider's Interconnection Facilities are directly assigned to the Interconnection Customer(s) using such facilities.

Interconnection Customer funding of Network Upgrades are eligible for credits as provided in Article 11 of the LGIA.

10.5 Definitive Interconnection System Impact Study Agreement.

Unless otherwise agreed, pursuant to the Scoping Meeting provided for in Section 4.4.7, within thirty (30) Calendar Days of the Transmission Provider's acknowledgement of a valid Interconnection Request requesting that a Definitive Interconnection System Impact Study be performed, the Transmission Provider shall provide to the Interconnection Customer a DISIS Agreement in the form of Appendix 6-3 to this LGIP. The DISIS Agreement shall provide that Interconnection Customer shall compensate the Transmission Provider for the actual cost of the DISIS. At least seven (7) Calendar Days before the close of a Customer Engagement Window, the Transmission Provider shall provide to each Interconnection Customer proposing to enter the DISIS Cluster a non-binding updated good faith estimate of the cost and timeframe for completing the Definitive Interconnection System Impact Study.

10.6 Execution of Definitive Interconnection System Impact Study Agreement.

The Interconnection Customer shall execute the DISIS Agreement and deliver the executed DISIS Agreement to Transmission Provider no later than the close of the Customer Engagement Window or its Interconnection Request shall be deemed withdrawn by Transmission Provider.

10.7 Scope of Definitive Interconnection System Impact Study.

The Definitive Interconnection System Impact Study shall evaluate the impact of the proposed interconnection(s) within the Cluster on the reliability of the Transmission System. The Definitive Interconnection System Impact Study will consider the Transmission Provider's Base Case as well as all Generating Facilities (and with respect to (iii) below, any identified Network Upgrades associated with such higher queued requests) that, on the date the DISIS Request Window closes: (i) are existing and directly interconnected to the Transmission System; (ii) are existing and interconnected to Affected Systems and may have an impact on the Interconnection Request; (iii) have a pending Interconnection Request to interconnect to the Transmission System with a higher queue position than the DISIS Cluster, either individually under Section 5.2 or included in a higher queued Cluster Study; and (iv) have executed an LGIA or requested that an unexecuted LGIA be filed with FERC.

As set forth in more detail in Section 10.8 below, the Definitive Interconnection System Impact Study is a phased study under which the first phase (Phase 1) consists of a power flow and voltage analysis that is followed by a second phase (Phase 2) that consists of a short circuit analysis and a stability analysis. Any DISIS re-studies (Phase 3) shall consist of a power flow/voltage analysis, a short circuit analysis, and/or a stability analysis, as needed. The Definitive Interconnection System Impact Study report shall state the assumptions upon which it is based; state the results of the analyses; and provide the requirements or potential impediments to providing the requested interconnection, including a preliminary indication of the cost and length of time that would be necessary to correct any problems identified in

those analyses and implement the interconnection. The Definitive Interconnection System Impact Study shall provide a list of facilities that are required as a result of the Interconnection Request and a non-binding good faith estimate of cost responsibility and a nonbinding good faith estimated time to construct.

For purposes of clustering Interconnection Requests, the Transmission Provider may make reasonable changes to the requested Point(s) of Interconnection as part of the DISIS to facilitate the efficient and reliable interconnection of Interconnection Customers at common Points of Interconnection. The Transmission Provider shall notify Interconnection Customers in writing of any intended changes to the requested Point(s) of Interconnection and the Point(s) of Interconnection shall only change upon mutual agreement. Where the Interconnection Customer agrees to a Transmission Provider's proposal to change the Point of Interconnection and the change results in a loss of Site Control, the Interconnection Customer shall have 150 days to provide affirmation and reasonable documentation, if requested by the Transmission Provider, that Site Control to the new Point of Interconnection has been obtained or the Interconnection Customer shall be required to post the additional security required by Section 10.11.6 to continue to proceed through the Definitive Interconnection Study process.

Where an Interconnection Customer is proposing to interconnect a Generating Facility to the Distribution System and has been determined through Phase 1 not to cause or contribute to the need for Network Upgrades requiring further study in Phase 2, the Transmission Provider shall complete a Distribution level System Impact Study, as further discussed in Section 10.8(a.) below.

10.8 Definitive Interconnection System Impact Study Procedures.

Transmission Provider shall coordinate the Definitive Interconnection System Impact Study with any Affected System that is affected by the Interconnection Request pursuant to Section 4.6 above. Transmission Provider shall utilize existing studies to the extent practicable when it performs the DISIS. Interconnection Requests for DISIS may be submitted only within the DISIS Request Window and Transmission Provider shall initiate the Definitive Interconnection Study Process pursuant to Section 4.4.2 and 10.1.

The diagrams attached as Appendix 6-2 provides an overview and timeline of the Definitive Interconnection Study Process, including the Phases and milestones associated with the Definitive Interconnection System Impact Study.

a. The DISIS Cluster shall consist of all eligible Interconnection Requests that have (i) executed a DISIS Agreement pursuant to Section 10.6; (ii) provided initial security equal to 1 times the Section 4.1.2 study deposit amount to enter the DISIS in the form of an irrevocable letter of credit or cash; and (iii) provided evidence satisfactory to the Transmission Provider of either an initial Readiness Milestone ("M1"), as described in Section 10.11.1, or additional security in the form of an irrevocable letter of credit or cash in lieu of the M1 Readiness Milestone equal to one times the study deposit required in Section 10.11.6 before the close of the Customer Engagement Window pursuant to Section 10.1. The Transmission Provider shall use Reasonable Efforts to complete the first phase (Phase 1) consisting of a power flow and voltage analysis within ninety (90) Calendar Days. The Phase 1 Report shall identify the Transmission Provider's Interconnection Facilities and Transmission Provider's Network Upgrades that are expected to be required as a result of the Interconnection Request(s) and a non-binding good-faith indicative level estimate of cost responsibility and a non-binding

good-faith estimated time to construct. After issuing the Phase 1 Report, the Transmission Provider shall hold a second thirty (30) Calendar Day Customer Engagement Window and will host an open meeting ("Phase 1 Report Meeting") with Interconnection Customer(s) and identified Affected System Operators within ten (10) Business Days of publishing the DISIS Phase 1 results on the Transmission Provider's OASIS site.

Where the Transmission Provider determines through the initial Phase 1 study that a proposed distribution-level Interconnection Customer will not cause or contribute to the need for Network Upgrades, the Transmission Provider shall notify the Interconnection Customer in writing during the post-Phase 1 Customer Engagement Window that the Transmission Provider shall complete an individual Distribution-level System Impact Study for the proposed Generating Facility within fifty (50) Business Days. Upon issuance of the individual Distribution-level System Impact Study Report, the Interconnection Customer would then proceed immediately to the Section 11 Facilities Study process. Interconnection Customers that are studied for distribution level impacts only must continue to meet all Readiness Milestone requirements (or provide security in lieu of the Readiness Milestone) to proceed to Facilities Study under Section 11.

b. Within twenty (20) Calendar Days of the Phase 1 Report Meeting, all Interconnection Customers proceeding in the DISIS to Phase 2 are required to satisfy the requirements of Readiness Milestone 2 ("M2") as described in Section 10.11.2. Interconnection Customers that do not provide the Readiness Milestone (or provide additional security in lieu of the Readiness Milestone described in Section 10.11.6) by the required date shall be deemed withdrawn from the Queue and subject to a Withdrawal Penalty pursuant to Section 4.7.1.

c. Interconnection Customers who satisfy the M2 readiness requirements or provide the required security by the Transmission Provider shall continue in to the second phase ("Phase 2") of the Definitive Interconnection System Impact Study. Phase 2 consists of an updated power flow/voltage analysis (if necessary), stability analysis and short circuit analysis for the Interconnection Customers remaining in the DISIS Cluster. The Transmission Provider shall use Reasonable Efforts to complete the Phase 2 analysis within one hundred fifty (150) Calendar Days. The results of this analysis shall identify the Interconnection Facilities and Network Upgrades expected to be required to reliably interconnect the Generating Facilities in that DISIS Cluster. The Phase 2 Report shall provide non-binding estimates of the costs of required Network Upgrades and Interconnection Facilities allocated to each Interconnection Customer within the Cluster. The Transmission Provider shall hold a third thirty (30) Calendar Day Customer Engagement Window and will host an open meeting ("Phase 2 Report Meeting") with Interconnection Customer(s) and identified Affected System Operators within ten (10) Business Days of publishing the DISIS Phase 2 results on the Transmission Provider's OASIS site.

d. Within twenty (20) Calendar Days of the Phase 2 Report Meeting, each Interconnection Customer with an Interconnection Request in the Cluster is required to provide Readiness Milestone 3 ("M3") as described in Section 10.11.3. Interconnection Customers that do not provide the Readiness Milestone (or provide security *in lieu* of the Readiness Milestone described in Section 10.11.6) by the required date shall be deemed withdrawn from the Queue pursuant to Section 4.7.1.

    i. If all Interconnection Customers in the Cluster provide M3 and no Interconnection Customers withdraw from the Queue at this stage, the Definitive Interconnection

Study Process shall advance to the Facilities Study (Section 11). The Transmission Provider shall notify Interconnection Customers in the Cluster in writing that Phase 3 is not required and simultaneously provide the Facilities Study Agreement in the form of Appendix 7.

ii. If one or more Interconnection Customer(s) withdraws from the Cluster, the Transmission Provider shall determine if a full System Impact Re-study is necessary. If the Transmission Provider determines a re-study is not necessary and Phase 3 is not required, the Transmission Provider shall provide an updated Phase 2 Report within thirty (30) Calendar Days of such determination and the Definitive Interconnection Study Process advances to the Interconnection Facilities Study (Section 11). When the updated Phase 2 report is issued, the Transmission Provider shall notify Interconnection Customers in the Cluster in writing that Phase 3 is not required and simultaneously provide the Facilities Study Agreement in the form of Appendix 7.

iii. If one or more Interconnection Customers withdraws from the Cluster and the Transmission Provider determines a full System Impact Re-study is necessary, the Transmission Provider will continue with System Impact restudies ("Phase 3") until the Transmission Provider determines that no further re-studies are required. If Interconnection Customer withdraws its Interconnection Request after the Phase 3 restudy described in Section 10.8(e) or during the Facilities Study and the Transmission Provider determines system impact level studies are necessary, the Cluster shall be restudied under the terms of Phase 3. Transmission Provider shall notify Interconnection Customers in the Cluster in writing and post on OASIS that a re-study is required.

e. If required by the Transmission Provider under Section 10.8(d.) (iii.), Interconnection Requests shall continue with the third phase ("Phase 3") of the Definitive Interconnection System Impact Study. Phase 3 may consist of updated power flow/voltage analysis, stability analysis, and/or short circuit analysis if necessary for the Interconnection Requests remaining in the Cluster. The Transmission Provider shall use Reasonable Efforts to complete the Phase 3 analysis within one hundred fifty (150) Calendar Days. The results of this analysis shall identify the Transmission Provider's Interconnection Facilities and Transmission Provider's Network Upgrades expected to be required to reliably interconnect the Generating Facilities in that Cluster and shall provide non-binding estimates for the required upgrades. The Phase 3 Report shall identify each Interconnection Request's estimated allocated costs for Interconnection Facilities and Network Upgrades. The Transmission Provider shall hold a fourth thirty (30) Calendar Day Customer Engagement Window and will host an open meeting ("Phase 3 Report Meeting") with Interconnection Customer(s) and identified Affected System Operators within ten (10) Business Days of publishing the DISIS Phase 3 results on the Transmission Provider's OASIS site. The Transmission Provider shall notify Interconnection Customers in the Cluster in writing when no further re-studies are required and simultaneously provide the Interconnection Customer(s) a Facilities Study Agreement in the form of Appendix 7. If additional restudies are required before moving to Facilities Study, within twenty (20) Calendar Days of the Phase 3 Report Meeting (or Phase 3 Updated Report Meeting), all Interconnection Customers are required to provide an updated Readiness Milestone 3 ("M3") as described in Section 10.11.3 . Interconnection Customers that do not provide the Readiness Milestone (or provide security in lieu of the Readiness Milestone described in Section 10.11.6) by the required date shall be deemed withdrawn from the Queue pursuant to Section 4.7. Transmission Provider shall notify Interconnection

Customers in the Cluster in writing when no further re-studies are required and simultaneously provide the Interconnection Facilities Agreement in the form of Appendix 7.

f. Within thirty (30) Calendar Days of the notice that no System Impact restudies are needed and delivery of a Facilities Study Agreement by the Transmission Provider, each Interconnection Customer with an Interconnection Request in the Cluster that has completed the DISIS process is required to (i) return an executed Facilities Study Agreement in the form of Appendix 7 (completed and including all required data identified therein); and (ii) provide Readiness Milestone 4 ("M4") as described in Section 10.11.4 (or provide additional security in lieu of the Readiness Milestone described in Section 10.11.6). Interconnection Customers that do not provide the executed Facilities Study Agreement and Readiness Milestone 4(or provide security in lieu of the Readiness Milestone 4 described in Section 10.11.6) by the required date shall be deemed withdrawn from the Queue and subject to a Withdrawal Penalty pursuant to Section 4.7.1.

At the request of an Interconnection Customer or at any time the Transmission Provider determines that it will not meet the indicated timeframe for completing the DISIS, the Transmission Provider shall notify Interconnection Customer(s) in writing as to the schedule status of the DISIS Cluster. If the Transmission Provider is unable to complete the DISIS within the time period, it shall notify Interconnection Customer(s) and provide an estimated completion date with an explanation of the reasons why additional time is required. Upon request, Transmission Provider shall provide Interconnection Customer all supporting documentation, workpapers, and relevant pre-Interconnection Request and post-Interconnection Request power flow, short circuit and stability databases for the DISIS, subject to confidentiality arrangements consistent with Section 16.1.

10.9 Post-DISIS Report Meeting.

Within ten (10) Business Days of furnishing a final DISIS study report to Interconnection Customer(s) with an Interconnection Request in the Cluster and posting the report on OASIS, the Transmission Provider shall convene an open meeting to discuss the study results. The Transmission Provider shall, upon request, also make itself available to meet with individual Interconnection Customers after the study report is provided.

10.10 Re-Study.

If Re-Study of the Definitive Interconnection System Impact Study other than the re-study described above in 10.8(e.) is required due to a higher or equal priority queued Interconnection Request dropping out of the Queue, or a modification of a higher queued Interconnection Request subject to Section 5.4, Transmission Provider shall notify Interconnection Customer(s) in writing. The Transmission Provider shall make Reasonable Efforts to ensure such Re-Study take no longer than one hundred fifty (150) Calendar Days from the date of notice. Any cost of Re-Study shall be borne by Interconnection Customer(s) being re-studied.

10.11 Readiness Milestones.

Satisfaction of the requirements of Readiness Milestones 1, 2, 3, and 4 are required throughout the Definitive Interconnection Study Process to demonstrate the readiness of the Interconnection Customer to develop the Generating Facility. Satisfaction of the requirements of Readiness Milestones 1, 2, 3 are required during the Definitive Interconnection System Impact Study Process. Readiness Milestone 4 is required after the Definitive Interconnection System Impact Study Process has concluded, but before the

Facilities Study commences. Satisfaction of the requirements of Readiness Milestone 5 is required after the LGIA is executed as described in Section 10.11.5. An Interconnection Customer who does not satisfy the requirements of an applicable Readiness Milestone (or provide additional security in lieu thereof described in Section 10.11.6) is subject to withdrawal of its Interconnection Request from the queue and payment of a withdrawal penalty pursuant to Section 4.7.1.

10.11.1 Readiness Milestone 1 ("M1").

M1 is satisfied by the Interconnection Customer providing one of the three options below. M1 may also be satisfied by providing additional security described in Section 10.11.6 in lieu of demonstrating readiness.

a) Executed term sheet (or comparable evidence) related to a contract, binding upon the parties to the contract, for sale of (i) the constructed Generating Facility, (ii) the Generating Facility's energy, or (iii) the Generating Facility's ancillary services if the Generating Facility is an electric storage resource; where the term of sale under (ii) or (iii) is not less than five (5) years.

b) Reasonable evidence the Generating Facility has been selected by a Resource Planning Entity in a Resource Plan or is offering to sell its output through a Resource Solicitation Process; or

c) Provisional Large Generator Interconnection Agreement accepted for filing at FERC. Such an agreement shall not be suspended and shall include a commitment to construct the Generating Facility.

10.11.2 Readiness Milestone 2 ("M2").

M2 is satisfied by the Interconnection Customer providing one of the three options below. M2 may also be satisfied by providing additional security as described in Section 10.11.6 in lieu of demonstrating readiness.

a) Executed term sheet (or comparable evidence) related to a contract, binding upon the parties to the contract, for sale of (i) the constructed Generating Facility, (ii) the Generating Facility's energy, or (iii) the Generating Facility's ancillary services if the Generating Facility is an electric storage resource; where the term of sale under (ii) or (iii) is not less than five (5) years.

b) Reasonable evidence that the Project has been selected by a Resource Planning Entity in a Resource Plan or is offering to sell its output through a Resource Solicitation Process; or

c) Provisional Large Generator Interconnection Agreement accepted for filing at FERC. Such an agreement shall not be suspended and shall include a commitment to construct the Generating Facility.

10.11.3 Readiness Milestone 3 ("M3").

M3 is satisfied by the Interconnection Customer providing one of the three options below. M3 may also be satisfied by providing additional security described in Section 10.11.6 in lieu of demonstrating readiness.

a) Executed contract, binding upon the parties to the contract, for sale of (i) the constructed Generating Facility, (ii) the Generating Facility's energy, or (iii) the Generating Facility's ancillary services if the Generating Facility is an electric storage resource; where under (ii) or (iii) the term of sale is not less than five (5) years.

b) Reasonable evidence that the project has been selected by a Resource Planning Entity in a Resource Plan or is offering to sell its output through a Resource Solicitation Process; or

c) An unsuspended Provisional Large Generator Interconnection Agreement accepted for filing by FERC with reasonable evidence that the Generating Facility and Interconnection Facilities have commenced design and engineering.

10.11.4 Readiness Milestone 4 ("M4").

M4 is satisfied by the Interconnection Customer providing one of the three options below. M4 may also be satisfied by providing security as described in Section 10.11.6 in lieu of demonstrating readiness.

a) Executed contract, binding upon the parties to the contract, for sale of (i) the constructed Generating Facility, (ii) the Generating Facility's energy, or (iii) the Generating Facility's ancillary services and capacity if the Generating Facility is an electric storage resource; where under (ii) or (iii) the term of sale is not less than five (5) years;

b) Reasonable evidence that the project has been selected by a Resource Planning Entity in a Resource Plan and, if required, has filed an application for a Certificate of Public Convenience and Necessity to construct the Generating Facility or has been selected in a Resource Solicitation Process; or

c) An unsuspended Provisional Large Generator Interconnection Agreement accepted for filing by FERC with reasonable evidence that the Generating Facility and Interconnection Facilities have commenced construction.

10.11.5 Readiness Milestone 5 ("M5").

All Interconnection Customers are required to provide security in order to satisfy Readiness Milestone 5 (M5) when the LGIA is executed as described in Section 14.4. The amount of security required for M5 is equal to nine (9) times the Interconnection Customer's share of the Definitive Interconnection Study Process study costs. If this amount is not known, the Transmission Provider shall use the Section 4.4.2 study deposit amount as an estimate of study cost until such amounts are known. If initially estimated, M5 shall be updated when the final invoice for actual study costs is issued. As this M5 amount is the total security required to satisfy Readiness Milestone 5, any security previously provided pursuant to Sections 10.11.1, 10.11.2, 10.11.3, 10.11.4, or 10.11.6 shall be applied towards the Readiness Milestone 5 amount when the LGIA is executed. The Interconnection Customer shall only be responsible to provide the incremental amount of security to the Transmission Provider and any excess security provided shall be refunded to the Interconnection Customer. Transmission Provider shall refund all security provided under this section to the Interconnection Customer upon achieving Commercial Operation.

10.11.6 Security Requirements.

A table showing the security required in each milestone is provided in Appendix 6-2. The security amount is dependent on if the Interconnection Customer provided a Readiness Milestone and the study phase the Interconnection Customer is entering. All security shall be in the form of (a) cash or (b) an irrevocable letter of credit in a form reasonably acceptable to Transmission Provider. If the Interconnection Customer withdraws prior to executing an LGIA, the Transmission Provider shall be entitled to use the financial security as payment for (a) the final invoice for study costs and (b) the Withdrawal Penalty, after which any remaining amount of security shall be returned to Interconnection Customer. If the Interconnection Customer does not withdraw and executes an LGIA, the amount of security shall be increased or decreased as needed in order to reflect the cost estimate for Transmission Provider's Interconnection Facilities and Network Upgrades set forth in Appendix B to the LGIA. Once the LGIA is fully executed, the terms of the LGIA shall govern such security.

Prior to the close of the Customer Engagement Window, all Interconnection Customers must provide initial security equal to the Section 4.1.2 study deposit amount as described in Section 10.1 and 10.8(a.). The security provided in Section 10.8(a.) will be applied towards the amount of security required for M5.

An Interconnection Customer may opt to provide security *in lieu* of providing Readiness Milestones 1 through 4, as described above in Sections 10.11.1, 10.11.2, 10.11.3, and 10.11.4. The security provided is applied towards the security amount required for each successive milestone if the Interconnection Customer does not withdraw from the Definitive Interconnection Study Process. For example, the security provided for M2 is applied to the amount of security required for M3. If an Interconnection Customer is initially required to provide increased security under this Section 10.11.6 because it cannot satisfy the requirements of a Readiness Milestone, but subsequently does satisfy those requirements prior to the next Readiness Milestone, its security should be reduced accordingly.

In lieu of providing a demonstration of readiness for Milestones 1 through 4, the amount of security required is a multiple of the study deposit described in Section 4.1.2 and is in addition to the initial security required for all Interconnection Customers under Section 10.1 and 10.8(a.). The additional amount of security required for each milestone for Interconnection Customers that do not provide a demonstration of readiness is:

M1 = 1 times the Section 4.1.2 study deposit amount
M2 = 2 times the Section 4.1.2 study deposit amount
M3 = 4 times the Section 4.1.2 study deposit amount
M4 = 6 times the Section 4.1.2 study deposit amount

For clarity, the total (i.e. inclusive of the security required under Section 10.8(a.) amount of security required for each milestone for Interconnection Customers that do not provide a demonstration of readiness is:

M1 = 2 times the Section 4.1.2 study deposit amount
M2 = 3 times the Section 4.1.2 study deposit amount
M3 = 5 times the Section 4.1.2 study deposit amount
M4 = 7 times the Section 4.1.2 study deposit amount

If the Interconnection Customer withdraws prior to executing an LGIA, the Transmission Provider shall be entitled to use the security as payment for (a) the final invoice for study costs and (b) the Withdrawal Penalty, after which any remaining amount of security shall be returned to Interconnection Customer. If the Interconnection Customer does not withdraw and executes an LGIA, the amount of financial security shall be increased or decreased as needed in order to reflect the cost estimate for Transmission Provider's Interconnection Facilities and Network Upgrades set forth in Appendix B to the LGIA. Once the LGIA is fully executed, the terms of the LGIA shall govern such security.

Section 11. Interconnection Facilities Study.

11.1 Serial Interconnection Study Process – Interconnection Facilities Study Agreement. Simultaneously with the delivery of the Interconnection System Impact Study to Interconnection Customer, Transmission Provider shall provide to Interconnection Customer an Interconnection Facilities Study Agreement in the form of Appendix 7 to this LGIP. The Interconnection Facilities Study Agreement shall provide that Interconnection Customer shall compensate Transmission Provider for the actual cost of the Interconnection Facilities Study. Within three (3) Business Days following the Interconnection System Impact Study results meeting, Transmission Provider shall provide to Interconnection Customer a non-binding good faith estimate of the cost and timeframe for completing the Interconnection Facilities Study. Interconnection Customer shall execute the Interconnection Facilities Study Agreement and deliver the executed Interconnection Facilities Study Agreement to Transmission Provider within thirty (30) Calendar Days after its receipt, together with the required technical data and the greater of $100,000 or Interconnection Customer's portion of the estimated monthly cost of conducting the Interconnection Facilities Study.

11.1.1 Transmission Provider shall invoice Interconnection Customer on a monthly basis for the work to be conducted on the Interconnection Facilities Study each month. Interconnection Customer shall pay invoiced amounts within thirty (30) Calendar Days of receipt of invoice. Transmission Provider shall continue to hold the amounts on deposit until settlement of the final invoice.

11.2 Definitive Interconnection Study Process – Facilities Study Agreement. Simultaneously with the notice to Interconnection Customer(s) that Phase 3 is complete or not required, Transmission Provider shall provide to Interconnection Customer an Interconnection Facilities Study Agreement in the form of Appendix 7 to this LGIP. Within five (5) Business Days following the open DISIS results (Phase 2 or Phase 3) meeting, Transmission Provider shall provide to Interconnection Customer a non-binding good faith estimate of the cost and timeframe for completing the Interconnection Facilities Study. The Interconnection Facilities Study Agreement shall provide that Interconnection Customer shall compensate Transmission Provider for the actual cost of the Interconnection Facilities Study. Interconnection Customer shall execute the Interconnection Facilities Study Agreement and deliver the executed Interconnection Facilities Study Agreement to Transmission Provider, together with the required technical data, and Readiness Milestone 4 as described in Section 10.11.4. Interconnection Customers that do not provide the Readiness Milestone (or additional security *in lieu* of the Readiness Milestone) by the required date shall be deemed withdrawn from the Queue pursuant to Section 4.7.

11.3 Scope of Interconnection Facilities Study.

The Interconnection Facilities Study shall specify and provide a non-binding estimate of the cost of the equipment, engineering, procurement and construction work needed to implement the conclusions of the final Phase 2 or Phase 3 Report (as appropriate) in the Definitive Interconnection Study Process, the Replacement Impact Study and the Reliability Assessment Study in the Generation Replacement process, and the System Impact Study in the Serial Interconnection Study Process in accordance with Good Utility Practice to physically and electrically connect the Interconnection Facilities to the Transmission System. The Interconnection Facilities Study shall also identify the electrical switching configuration of the connection equipment, including, without limitation: the transformer, switchgear, meters, and other station equipment; the nature and estimated cost of any Transmission Provider's Interconnection Facilities and Network Upgrades necessary to accomplish the interconnection; and an estimate of the time required to complete the construction and installation of such facilities.

The Interconnection Facilities Study will also identify any potential control equipment for requests for Interconnection Service that are lower than the Generating Facility Capacity.

11.4 Interconnection Facilities Study Procedures.

a. Transmission Provider shall coordinate the Interconnection Facilities Study with any Affected System pursuant to Section 4.6 above. Transmission Provider shall utilize existing studies to the extent practicable in performing the Interconnection Facilities Study.

   Transmission Provider shall use Reasonable Efforts to complete the study and issue a draft Interconnection Facilities Study report to Interconnection Customer within ninety (90) Calendar Days where Transmission Provider is administering the Serial Interconnection Study Process or the Generation Replacement process, and within one hundred fifty (150) Calendar Days for all Interconnection Customers within the Cluster where the Transmission Provider is administering the Definitive Interconnection Study Process.

b. At the request of Interconnection Customer or at any time Transmission Provider determines that it will not meet the required time frame for completing the Interconnection Facilities Study, Transmission Provider shall notify Interconnection Customer as to the schedule status of the Interconnection Facilities Study. If Transmission Provider is unable to complete the Interconnection Facilities Study and issue a draft Interconnection Facilities Study report within the time required, it shall notify Interconnection Customer and provide an estimated completion date and an explanation of the reasons why additional time is required.

c. Interconnection Customer may, within thirty (30) Calendar Days after receipt of the draft Interconnection Facilities Study report, provide written comments to Transmission Provider, which Transmission Provider shall consider in completing the final Interconnection Facilities Study report. Transmission Provider shall issue the final Interconnection Facilities Study report within fifteen (15) Business Days of receiving Interconnection Customer's comments or promptly upon receiving Interconnection Customer's statement that it will not provide comments. Transmission Provider may reasonably extend such fifteen (15) Business Day period upon notice to Interconnection

Customer if Interconnection Customer's comments require Transmission Provider to perform additional analyses or make other significant modifications prior to the issuance of the final Interconnection Facilities Study report. Upon request, Transmission Provider shall provide Interconnection Customer supporting documentation, workpapers, and databases or data developed in the preparation of the Interconnection Facilities Study, subject to confidentiality arrangements consistent with Section 16.1.

11.5 Meeting with Transmission Provider.

Within ten (10) Business Days of providing a draft Interconnection Facilities Study report to Interconnection Customer, Transmission Provider and Interconnection Customer shall meet to discuss the results of the Interconnection Facilities Study.

11.6 Serial Interconnection Study Process Facilities Study Re-Study.

If Re-Study of the Interconnection Facilities Study is required due to a higher or equal priority queued project dropping out of the Queue or a modification of a higher queued project pursuant to Section 5.4, Transmission Provider shall so notify Interconnection Customer in writing. The Transmission Provider shall make Reasonable Efforts to ensure such Re-Study shall take no longer than sixty (60) Calendar Days from the date of notice. Re-Studies that require rerunning the system impact study analysis make take longer than sixty days. Any cost of Re-Study shall be borne by the Interconnection Customer(s) being re-studied.

11.7 Definitive Interconnection Study Process Facilities Study Re-Study.

If Re-Study of the Interconnection Facilities Study is required due to a higher or equal priority queued project dropping out of the Queue or a modification of a higher queued project pursuant to Section 5.4, Transmission Provider shall so notify Interconnection Customer in writing. The Transmission Provider shall make Reasonable Efforts to ensure such Re-Study shall take no longer than sixty (60) Calendar Days from the date of notice, unless the Transmission Provider DISIS Phase 3 re-study is required. Re-Studies that require rerunning the DISIS analysis make take longer than sixty days. Any cost of Re-Study shall be borne by the Interconnection Customer(s) being re-studied pursuant to Section 10.3.

Section 12. Engineering & Procurement ("E&P") Agreement.

Prior to executing an LGIA, an Interconnection Customer may, in order to advance the implementation of its interconnection, request and Transmission Provider shall offer the Interconnection Customer, an E&P Agreement that authorizes Transmission Provider to begin engineering and procurement of long lead-time items necessary for the establishment of the interconnection. However, Transmission Provider shall not be obligated to offer an E&P Agreement if Interconnection Customer is in Dispute Resolution as a result of an allegation that Interconnection Customer has failed to meet any milestones in the Serial Interconnection Study Process, Readiness Milestones in the Definitive Interconnection Study Process, or comply with any prerequisites specified in other parts of the LGIP. The E&P Agreement is an optional procedure and it will not alter the Interconnection Customer's Queue Position or In-Service Date. The E&P Agreement shall provide for Interconnection Customer to pay the cost of all activities authorized by Interconnection Customer and to make advance payments or provide other satisfactory security for such costs.

Interconnection Customer shall pay the cost of such authorized activities and any cancellation costs for equipment that is already ordered for its interconnection, which cannot be mitigated as hereafter described, whether or not such items or equipment later become unnecessary. If Interconnection

Customer withdraws its application for interconnection or either Party terminates the E&P Agreement, to the extent the equipment ordered can be canceled under reasonable terms, Interconnection Customer shall be obligated to pay the associated cancellation costs. To the extent that the equipment cannot be reasonably canceled, Transmission Provider may elect: (i) to take title to the equipment, in which event Transmission Provider shall refund Interconnection Customer any amounts paid by Interconnection Customer for such equipment and shall pay the cost of delivery of such equipment, or (ii) to transfer title to and deliver such equipment to Interconnection Customer, in which event Interconnection Customer shall pay any unpaid balance and cost of delivery of such equipment.

Section 13. Serial Interconnection Study Process- Optional Interconnection Study.

13.1 Optional Interconnection Study Agreement.

On or after the date when Interconnection Customer receives Interconnection System Impact Study results, Interconnection Customer may request, and Transmission Provider shall perform a reasonable number of Optional Studies. The request shall describe the assumptions that Interconnection Customer wishes Transmission Provider to study within the scope described in Section 13.2. Within five (5) Business Days after receipt of a request for an Optional Interconnection Study, Transmission Provider shall provide to Interconnection Customer an Optional Interconnection Study Agreement in the form of Appendix 9.

The Optional Interconnection Study Agreement shall: (i) specify the technical data that Interconnection Customer must provide for each phase of the Optional Interconnection Study, (ii) specify Interconnection Customer's assumptions as to which Interconnection Requests with earlier queue priority dates will be excluded from the Optional Interconnection Study case and assumptions as to the type of interconnection service for Interconnection Requests remaining in the Optional Interconnection Study case, and (iii) Transmission Provider's estimate of the cost of the Optional Interconnection Study. To the extent known by Transmission Provider, such estimate shall include any costs expected to be incurred by any Affected System whose participation is necessary to complete the Optional Interconnection Study. Notwithstanding the above, Transmission Provider shall not be required as a result of an Optional Interconnection Study request to conduct any additional Interconnection Studies with respect to any other Interconnection Request.

Interconnection Customer shall execute the Optional Interconnection Study Agreement within ten (10) Business Days of receipt and deliver the Optional Interconnection Study Agreement, the technical data and a $10,000 deposit to Transmission Provider.

13.2 Scope of Optional Interconnection Study.

The Optional Interconnection Study will consist of a sensitivity analysis based on the assumptions specified by Interconnection Customer in the Optional Interconnection Study Agreement. The Optional Interconnection Study will also identify Transmission Provider's Interconnection Facilities and the Network Upgrades, and the estimated cost thereof, that may be required to provide transmission service or Interconnection Service based upon the results of the Optional Interconnection Study. The Optional Interconnection Study shall be performed solely for informational purposes. Transmission Provider shall use Reasonable Efforts to coordinate the study with any Affected Systems that may be affected by the types of Interconnection Services that are being studied. Transmission Provider shall utilize existing studies to the extent practicable in conducting the Optional Interconnection Study.

13.3 Optional Interconnection Study Procedures.

The executed Optional Interconnection Study Agreement, the prepayment, and technical and other data called for therein must be provided to Transmission Provider within ten (10) Business Days of Interconnection Customer receipt of the Optional Interconnection Study Agreement. Transmission Provider shall use Reasonable Efforts to complete the Optional Interconnection Study within a mutually agreed upon time period specified within the Optional Interconnection Study Agreement. If Transmission Provider is unable to complete the Optional Interconnection Study within such time period, it shall notify Interconnection Customer and provide an estimated completion date and an explanation of the reasons why additional time is required. Any difference between the study payment and the actual cost of the study shall be paid to Transmission Provider or refunded to Interconnection Customer, as appropriate. Upon request, Transmission Provider shall provide Interconnection Customer supporting documentation and workpapers and databases or data developed in the preparation of the Optional Interconnection Study, subject to confidentiality arrangements consistent with Section 16.1.

Section 14. Standard Large Generator Interconnection Agreement (LGIA).

14.1 Tender.

Interconnection Customer shall tender comments on the draft Interconnection Facilities Study Report within thirty (30) Calendar Days of receipt of the report. Within thirty (30) Calendar Days after the comments are submitted or after the Interconnection Customer notifies Transmission Provider in writing that it will provide no comments, Transmission Provider shall tender a draft LGIA, together with draft appendices. The draft LGIA shall be in the form of Transmission Provider's FERC-approved standard form LGIA, which is in Appendix 10. Interconnection Customer shall return the completed draft appendices and execute the LGIA within thirty (30) Calendar Days unless the sixty (60) Calendar Day negotiation period under Section 14.2 has commenced.

14.2 Negotiation.

Notwithstanding Section 14.1, at the request of Interconnection Customer Transmission Provider shall begin negotiations with Interconnection Customer concerning the appendices to the LGIA at any time after Interconnection Customer executes the Interconnection Facilities Study Agreement. Transmission Provider and Interconnection Customer shall negotiate concerning any disputed provisions of the appendices to the draft LGIA for not more than sixty (60) Calendar Days after tender of the final Interconnection Facilities Study Report. If Interconnection Customer determines that negotiations are at an impasse, Interconnection Customer may request termination of the negotiations at any time after tender of the draft LGIA pursuant to Section 14.1 and request submission of the unexecuted LGIA with FERC or initiate Dispute Resolution procedures pursuant to Section 16.6. If Interconnection Customer requests termination of the negotiations, but within sixty (60) Calendar Days thereafter fails to request either the filing of the unexecuted LGIA or initiate Dispute Resolution, it shall be deemed to have withdrawn its Interconnection Request. Unless otherwise agreed by the Parties, if Interconnection Customer has not executed the LGIA, requested filing of an unexecuted LGIA, or initiated Dispute Resolution procedures pursuant to Section 16.6 within sixty (60) Calendar Days of tender of draft LGIA, it shall be deemed to have withdrawn its Interconnection Request. Transmission Provider shall provide

to Interconnection Customer a final LGIA within fifteen (15) Business Days after the completion of the negotiation process.

14.3 Serial Interconnection Study Process – Execution and Filing.
Within fifteen (15) Business Days after receipt of the final LGIA, Interconnection Customer shall provide Transmission Provider (A) reasonable evidence that continued Site Control or (B) posting of $250,000, non-refundable additional security, which shall be applied toward future construction costs. At the same time, Interconnection Customer also shall provide reasonable evidence that one or more of the following milestones in the development of the Large Generating Facility, at Interconnection Customer election, has been achieved: (i) the execution of a contract for the supply or transportation of fuel to the Large Generating Facility; (ii) the execution of a contract for the supply of cooling water to the Large Generating Facility; (iii) execution of a contract for the engineering for, procurement of major equipment for, or construction of, the Large Generating Facility; (iv) execution of a contract for the sale of electric energy or capacity from the Large Generating Facility; or (v) application for an air, water, or land use permit.

Interconnection Customer shall either: (i) execute two originals of the tendered LGIA and return them to Transmission Provider; or (ii) request in writing that Transmission Provider file with FERC an LGIA in unexecuted form. As soon as practicable, but not later than ten (10) Business Days after receiving either the two executed originals of the tendered LGIA (if it does not conform with a FERC-approved standard form of interconnection agreement) or the request to file an unexecuted LGIA, Transmission Provider shall file the LGIA with FERC, together with its explanation of any matters as to which Interconnection Customer and Transmission Provider disagree and support for the costs that Transmission Provider proposes to charge to Interconnection Customer under the LGIA. An unexecuted LGIA should contain terms and conditions deemed appropriate by Transmission Provider for the Interconnection Request. If the Parties agree to proceed with design, procurement, and construction of facilities and upgrades under the agreed-upon terms of the unexecuted LGIA, they may proceed pending FERC action.

14.4 Definitive Interconnection Study Process – Execution and Filing.
Within fifteen (15) Business Days after receipt of the final LGIA, Interconnection Customer shall (a) provide reasonable evidence that continued Site Control exists as defined in Section 1 and (b) post Readiness Milestone 5 (security equal to nine (9) times that Interconnection Customer's share of the Definitive Interconnection Study Process study costs as described in Section 10.11.5). If the actual study costs are not known at the time, study costs shall be estimated as the study deposit described in Section 4.1.2, and the M5 amount shall be updated when the study costs are known. If the Interconnection Customer does not reach Commercial Operation, upon payment of any final invoice, including any Withdrawal Penalty, Readiness Milestone 5 shall be refunded to the Interconnection Customer, including any accumulated interest, if applicable. If the Interconnection Customer reaches Commercial Operation, Readiness Milestone 5 is refunded to the Interconnection Customer including any accumulated interest, if applicable. Within fifteen (15) Business Days after receipt of the final LGIA, Interconnection Customer also shall provide reasonable evidence that one or more of the following milestones in the development of the Large Generating Facility, at Interconnection Customer election, has been achieved: (i) the execution of a contract for the supply or transportation of fuel to the Large Generating Facility (not applicable for wind or solar resources); (ii) the execution of a contract for the supply of cooling water to the Large Generating Facility (not applicable for wind or solar resources); (iii) execution of a contract

for the engineering for, procurement of major equipment for, or construction of, the Large Generating Facility; (iv) execution of a contract (or comparable evidence) for the sale of electric energy or capacity from the Large Generating Facility; or (v) application(s) for applicable air, water, or land use permit(s).

Interconnection Customer shall either: (i) execute two originals of the tendered LGIA and return them to Transmission Provider; or (ii) request in writing that Transmission Provider file with FERC an LGIA in unexecuted form. As soon as practicable, but not later than ten (10) Business Days after receiving either the two executed originals of the tendered LGIA (if it does not conform with a FERC-approved standard form of interconnection agreement) or the request to file an unexecuted LGIA, Transmission Provider shall file the LGIA with FERC, together with its explanation of any matters as to which Interconnection Customer and Transmission Provider disagree and support for the costs that Transmission Provider proposes to charge to Interconnection Customer under the LGIA. An unexecuted LGIA should contain terms and conditions deemed appropriate by Transmission Provider for the Interconnection Request. If the Parties agree to proceed with design, procurement, and construction of facilities and upgrades under the agreed-upon terms of the unexecuted LGIA, they may proceed pending FERC action.

14.5 Commencement of Interconnection Activities.

If Interconnection Customer executes the final LGIA, Transmission Provider and Interconnection Customer shall perform their respective obligations in accordance with the terms of the LGIA, subject to modification by FERC. Upon submission of an unexecuted LGIA, Interconnection Customer and Transmission Provider shall promptly comply with the unexecuted LGIA, subject to modification by FERC.

Section 15. Construction of Transmission Provider's Interconnection Facilities and Network Upgrades.

15.1 Schedule.

Transmission Provider and Interconnection Customer shall negotiate in good faith concerning a schedule for the construction of Transmission Provider's Interconnection Facilities and the Network Upgrades.

15.2 Construction Sequencing.

15.2.1 General.

In general, the In-Service Date of an Interconnection Customers seeking interconnection to the Transmission System will determine the sequence of construction of Network Upgrades. Construction Sequencing may also apply to shared Transmission Provider's Interconnection Facilities in a similar manner as described below for Network Upgrades.

15.2.2 Advance Construction of Network Upgrades That are an Obligation of an Entity Other Than Interconnection Customer.

An Interconnection Customer with an LGIA, in order to maintain its In-Service Date, may request that Transmission Provider advance to the extent necessary the completion of Network Upgrades that: (i) were assumed in the Interconnection Studies for such Interconnection Customer, (ii) are necessary to support such In-Service Date, and (iii) would otherwise not be completed, pursuant to a contractual obligation of an entity other than

Interconnection Customer that is seeking interconnection to the Transmission System, in time to support such In-Service Date. Upon such request, Transmission Provider will use Reasonable Efforts to advance the construction of such Network Upgrades to accommodate such request; provided that Interconnection Customer commits to pay Transmission Provider: (i)any associated expediting costs and (ii) the cost of such Network Upgrades.

Transmission Provider will refund to Interconnection Customer both the expediting costs and the cost of Network Upgrades, in accordance with Article 11.4 of the LGIA. Consequently, the entity with a contractual obligation to construct such Network Upgrades shall be obligated to pay only that portion of the costs of the Network Upgrades that Transmission Provider has not refunded to Interconnection Customer. Payment by that entity shall be due on the date that it would have been due had there been no request for advance construction. Transmission Provider shall forward to Interconnection Customer the amount paid by the entity with a contractual obligation to construct the Network Upgrades as payment in full for the outstanding balance owed to Interconnection Customer. Transmission Provider then shall refund to that entity the amount that it paid for the Network Upgrades, in accordance with Article 11.4 of the LGIA.

15.2.3 Advancing Construction of Network Upgrades That are Part of an Expansion Plan of the Transmission Provider.

An Interconnection Customer with an LGIA, in order to maintain its In-Service Date, may request that Transmission Provider advance to the extent necessary the completion of Network Upgrades that: (i) are necessary to support such In-Service Date and (ii) would otherwise not be completed, pursuant to an expansion plan of Transmission Provider, in time to support such In-Service Date. Upon such request, Transmission Provider will use Reasonable Efforts to advance the construction of such Network Upgrades to accommodate such request; provided that Interconnection Customer commits to pay Transmission Provider any associated expediting costs. Interconnection Customer shall be entitled to transmission credits, if any, for any expediting costs paid.

15.2.4 Amended Interconnection System Impact Study.

An Interconnection System Impact Study will be amended to determine the facilities necessary to support the requested In-Service Date. This amended study will include those transmission and Large Generating Facilities that are expected to be in service on or before the requested In-Service Date.

Section 16. Miscellaneous.

16.1 Confidentiality.

Confidential Information shall include, without limitation, all information relating to a Party's technology, research and development, business affairs, and pricing, and any information supplied by either of the Parties to the other prior to the execution of an LGIA.

Information is Confidential Information only if it is clearly designated or marked in writing as confidential on the face of the document, or, if the information is conveyed orally or by inspection, if the Party providing the information orally informs the Party receiving the information that the information is confidential.

If requested by either Party, the other Party shall provide in writing, the basis for asserting that the information referred to in this Article warrants confidential treatment, and the requesting Party may disclose such writing to the appropriate Governmental Authority. Each Party shall be responsible for the costs associated with affording confidential treatment to its information.

16.1.1 Scope.

Confidential Information shall not include information that the receiving Party can demonstrate: (1) is generally available to the public other than as a result of a disclosure by the receiving Party; (2) was in the lawful possession of the receiving Party on a non-confidential basis before receiving it from the disclosing Party; (3) was supplied to the receiving Party without restriction by a third party, who, to the knowledge of the receiving Party after due inquiry, was under no obligation to the disclosing Party to keep such information confidential; (4) was independently developed by the receiving Party without reference to Confidential Information of the disclosing Party; (5) is, or becomes, publicly known, through no wrongful act or omission of the receiving Party or Breach of the LGIA; or (6) is required, in accordance with Section 16.1.6, Order of Disclosure, to be disclosed by any Governmental Authority or is otherwise required to be disclosed by law or subpoena, or is necessary in any legal proceeding establishing rights and obligations under the LGIA.

Information designated as Confidential Information will no longer be deemed confidential if the Party that designated the information as confidential notifies the other Party that it no longer is confidential.

16.1.2 Release of Confidential Information.

Neither Party shall release or disclose Confidential Information to any other person, except to its Affiliates (limited by the Standards of Conduct requirements), employees, consultants, or to parties who may be or considering providing financing to or equity participation with Interconnection Customer, or to potential purchasers or assignees of Interconnection Customer, on a need-to-know basis in connection with these procedures, unless such person has first been advised of the confidentiality provisions of this Section 16.1 and has agreed to comply with such provisions. Notwithstanding the foregoing, a Party providing Confidential Information to any person shall remain primarily responsible for any release of Confidential Information in contravention of this Section 16.1.

16.1.3 Rights.

Each Party retains all rights, title, and interest in the Confidential Information that each Party discloses to the other Party. The disclosure by each Party to the other Party of Confidential Information shall not be deemed a waiver by either Party or any other person or entity of the right to protect the Confidential Information from public disclosure.

16.1.4 No Warranties.

By providing Confidential Information, neither Party makes any warranties or representations as to its accuracy or completeness. In addition, by supplying Confidential Information, neither Party obligates itself to provide any particular information or Confidential Information to the other Party nor to enter into any further agreements or proceed with any other relationship or joint venture.

16.1.5 Standard of Care.

Each Party shall use at least the same standard of care to protect Confidential Information it receives as it uses to protect its own Confidential Information from unauthorized disclosure, publication or dissemination. Each Party may use Confidential Information solely to fulfill its obligations to the other Party under these procedures or its regulatory requirements.

16.1.6 Order of Disclosure.

If a court or a Government Authority or entity with the right, power, and apparent authority to do so requests or requires either Party, by subpoena, oral deposition, interrogatories, requests for production of documents, administrative order, or otherwise, to disclose Confidential Information, that Party shall provide the other Party with prompt notice of such request(s) or requirement(s) so that the other Party may seek an appropriate protective order or waive compliance with the terms of the LGIA. Notwithstanding the absence of a protective order or waiver, the Party may disclose such Confidential Information which, in the opinion of its counsel, the Party is legally compelled to disclose. Each Party will use Reasonable Efforts to obtain reliable assurance that confidential treatment will be accorded any Confidential Information so furnished.

16.1.7 Remedies.

The Parties agree that monetary damages would be inadequate to compensate a Party for the other Party's Breach of its obligations under this Section 16.1. Each Party accordingly agrees that the other Party shall be entitled to equitable relief, by way of injunction or otherwise, if the first Party Breaches or threatens to Breach its obligations under this Section 16.1, which equitable relief shall be granted without bond or proof of damages, and the receiving Party shall not plead in defense that there would be an adequate remedy at law. Such remedy shall not be deemed an exclusive remedy for the Breach of this Section 16.1, but shall be in addition to all other remedies available at law or in equity. The Parties further acknowledge and agree that the covenants contained herein are necessary for the protection of legitimate business interests and are reasonable in scope. No Party, however, shall be liable for indirect, incidental, or consequential or punitive damages of any nature or kind resulting from or arising in connection with this Section 16.1.

16.1.8 Disclosure to FERC, its Staff, or a State.

Notwithstanding anything in this Section 16.1 to the contrary, and pursuant to 18 CFR section 1b.20, if FERC or its staff, during the course of an investigation or otherwise, requests information from one of the Parties that is otherwise required to be maintained in confidence pursuant to the LGIP, the Party shall provide the requested information to FERC or its staff, within the time provided for in the request for information. In providing the information to FERC or its staff, the Party must, consistent with 18 CFR section 388.112, request that the information be treated as confidential and non-public by FERC and its staff and that the information be withheld from public disclosure. Parties are prohibited from notifying the other Party prior to the release of the Confidential Information to FERC or its staff. The Party shall notify the other Party to the LGIA when it is notified by FERC or its staff that a request to release Confidential Information has been received by FERC, at which time either of the Parties may respond before such information would be made public, pursuant to 18 CFR section 388.112. Requests from a state regulatory body conducting a confidential investigation shall be treated in a similar manner, consistent with applicable state rules and regulations.

16.1.9 Subject to the exception in Section 16.1.8, any information that a Party claims is competitively sensitive, commercial or financial information ("Confidential Information") shall not be disclosed by the other Party to any person not employed or retained by the other Party, except to the extent disclosure is (i) required by law; (ii) reasonably deemed by the disclosing Party to be required to be disclosed in connection with a dispute between or among the Parties, or the defense of litigation or dispute; (iii) otherwise permitted by consent of the other Party, such consent not to be unreasonably withheld; or (iv) necessary to fulfill its obligations under this LGIP or as a transmission service provider or a Control Area operator including disclosing the Confidential Information to an RTO or ISO or to a subregional, regional or national reliability organization or planning group. The Party asserting confidentiality shall notify the other Party in writing of the information it claims is confidential. Prior to any disclosures of the other Party's Confidential Information under this subparagraph, or if any third party or Governmental Authority makes any request or demand for any of the information described in this subparagraph, the disclosing Party agrees to promptly notify the other Party in writing and agrees to assert confidentiality and cooperate with the other Party in seeking to protect the Confidential Information from public disclosure by confidentiality agreement, protective order or other reasonable measures.

16.1.10 This provision shall not apply to any information that was or is hereafter in the public domain (except as a result of a Breach of this provision).

16.1.11 Transmission Provider shall, at Interconnection Customer's election, destroy, in a confidential manner, or return the Confidential Information provided at the time of Confidential Information is no longer needed.

16.2 Delegation of Responsibility.

Transmission Provider may use the services of subcontractors as it deems appropriate to perform its obligations under this LGIP. Transmission Provider shall remain primarily liable to Interconnection Customer for the performance of such subcontractors and compliance with its obligations of this LGIP. The subcontractor shall keep all information provided confidential and shall use such information solely for the performance of such obligation for which it was provided and no other purpose.

16.3 Serial Interconnection Study Process – Obligation for Study Costs.

Transmission Provider shall charge and Interconnection Customer shall pay the actual costs of the Interconnection Studies. Any difference between the study deposit and the actual cost of the applicable Interconnection Study shall be paid by or refunded, except as otherwise provided herein, to Interconnection Customer or offset against the cost of any future Interconnection Studies associated with the applicable Interconnection Request prior to beginning of any such future Interconnection Studies. Any invoices for Interconnection Studies shall include a detailed and itemized accounting of the cost of each Interconnection Study. Interconnection Customer shall pay any such undisputed costs within thirty (30) Calendar Days of receipt of an invoice therefor. Transmission Provider shall not be obligated to perform or continue to perform any studies unless Interconnection Customer has paid all undisputed amounts in compliance herewith.

16.4 Definitive Interconnection Study Process – Obligation for Study Costs and Withdrawal Penalty.

Transmission Provider shall charge and Interconnection Customer shall pay the actual costs of the Interconnection Studies and the Withdrawal Penalty, as applicable. Any difference

between the study deposit and the actual cost of the applicable Interconnection Study shall be paid by or refunded, except as otherwise provided herein. Any invoices for Interconnection Studies shall include a detailed and itemized accounting of the cost of each Interconnection Study as well as the Withdrawal Penalty, if applicable. Interconnection Customer shall pay any such undisputed costs within thirty (30) Calendar Days of receipt of an invoice. Transmission Provider shall not be obligated to perform or continue to perform any studies unless Interconnection Customer has paid all undisputed amounts in compliance herewith. If invoices are not paid within thirty (30) Calendar Days of receipt of an invoice, Transmission Provider shall draw upon the security provided under this LGIP to settle all accounts, which shall include any offsets of amounts due and owing by Transmission Provider. After the final invoice is paid and all accounts are settled, Transmission Provider shall refund all remaining security.

16.5 Third Parties Conducting Studies.

If (i) at the time of the signing of an Interconnection Study Agreement there is disagreement as to the estimated time to complete an Interconnection Study, (ii) Interconnection Customer receives notice pursuant to Sections 3.3, 7.1, 7.2, 8.3, 9.4, 10.8, 11.4, or 13.3 that Transmission Provider will not complete an Interconnection Study within the applicable timeframe for such Interconnection Study, or (iii) Interconnection Customer receives neither the Interconnection Study nor a notice under Sections 3.3, 7.1, 7.2, 8.3, 9.4, 10.8, 11.4, or 13.3 within the applicable timeframe for such Interconnection Study, then Interconnection Customer may require Transmission Provider to utilize a third party consultant reasonably acceptable to Interconnection Customer and Transmission Provider to perform such Interconnection Study under the direction of Transmission Provider. At other times, Transmission Provider may also utilize a third party consultant to perform such Interconnection Study, either in response to a general request of Interconnection Customer, or on its own volition.

In all cases, use of a third party consultant shall be in accord with Article 26 of the LGIA (Subcontractors) and limited to situations where Transmission Provider determines that doing so will help maintain or accelerate the study process for Interconnection Customer's pending Interconnection Request and not interfere with Transmission Provider's progress on Interconnection Studies for other pending Interconnection Requests. In cases where Interconnection Customer requests use of a third party consultant to perform such Interconnection Study, Interconnection Customer and Transmission Provider shall negotiate all of the pertinent terms and conditions, including reimbursement arrangements and the estimated study completion date and study review deadline. Transmission Provider shall convey all workpapers, data bases, study results and all other supporting documentation prepared to date with respect to the Interconnection Request as soon as soon as practicable upon Interconnection Customer's request subject to the confidentiality provision in Section 16.1. In any case, such third party contract may be entered into with either Interconnection Customer or Transmission Provider at Transmission Provider's discretion. In the case of (iii) Interconnection Customer maintains its right to submit a claim to Dispute Resolution to recover the costs of such third party study. Such third party consultant shall be required to comply with this LGIP, Article 26 of the LGIA (Subcontractors), and the relevant Tariff procedures and protocols as would apply if Transmission Provider were to conduct the Interconnection Study and shall use the information provided to it solely for purposes of performing such services and for no other purposes. Transmission Provider shall cooperate with such third party consultant and Interconnection Customer to complete and issue the Interconnection Study in the shortest reasonable time.

16.6 Disputes.

16.6.1 Submission.

In the event either Party has a dispute, or asserts a claim, that arises out of or in connection with the LGIA, the LGIP, or their performance, such Party (the "disputing Party") shall provide the other Party with written notice of the dispute or claim ("Notice of Dispute"). Such dispute or claim shall be referred to a designated senior representative of each Party for resolution on an informal basis as promptly as practicable after receipt of the Notice of Dispute by the other Party. In the event the designated representatives are unable to resolve the claim or dispute through unassisted or assisted negotiations within thirty (30) Calendar Days of the other Party's receipt of the Notice of Dispute, such claim or dispute may, upon mutual agreement of the Parties, be submitted to arbitration and resolved in accordance with the arbitration procedures set forth below. In the event the Parties do not agree to submit such claim or dispute to arbitration, each Party may exercise whatever rights and remedies it may have in equity or at law consistent with the terms of this LGIA. Where the Transmission Provider is administering a Definitive Interconnection Study Process as prescribed in Section 10 and an Interconnection Customer initiates a dispute pursuant to this Section, the disputing Interconnection Customer shall have the option to either withdraw from the Cluster and be studied as part of the next Cluster or to continue being evaluated as part of the Cluster provided that it complies with all Readiness Milestones and other requirements of the Section 10 Definitive Interconnection System Impact Study.

16.6.2 External Arbitration Procedures.

Any arbitration initiated under these procedures shall be conducted before a single neutral arbitrator appointed by the Parties. If the Parties fail to agree upon a single arbitrator within ten (10) Calendar Days of the submission of the dispute to arbitration, each Party shall choose one arbitrator who shall sit on a three-member arbitration panel. The two arbitrators so chosen shall within twenty (20) Calendar Days select a third arbitrator to chair the arbitration panel. In either case, the arbitrators shall be knowledgeable in electric utility matters, including electric transmission and bulk power issues, and shall not have any current or past substantial business or financial relationships with any party to the arbitration (except prior arbitration). The arbitrator(s) shall provide each of the Parties an opportunity to be heard and, except as otherwise provided herein, shall conduct the arbitration in accordance with the Commercial Arbitration Rules of the American Arbitration Association ("Arbitration Rules") and any applicable FERC regulations or RTO rules; provided, however, in the event of a conflict between the Arbitration Rules and the terms of this Section 16, the terms of this Section 16 shall prevail.

16.6.3 Arbitration Decisions.

Unless otherwise agreed by the Parties, the arbitrator(s) shall render a decision within ninety (90) Calendar Days of appointment and shall notify the Parties in writing of such decision and the reasons therefor. The arbitrator(s) shall be authorized only to interpret and apply the provisions of the LGIA and LGIP and shall have no power to modify or change any provision of the LGIA and LGIP in any manner. The decision of the arbitrator(s) shall be final and binding upon the Parties, and judgment on the award may be entered in any court having jurisdiction. The decision of the arbitrator(s) may be appealed solely on the grounds that the conduct of the arbitrator(s), or the decision itself, violated the standards set forth in the Federal Arbitration Act or the Administrative Dispute Resolution Act. The final decision

of the arbitrator must also be filed with FERC if it affects jurisdictional rates, terms and conditions of service, Interconnection Facilities, or Network Upgrades.

16.6.4 Costs.
Each Party shall be responsible for its own costs incurred during the arbitration process and for the following costs, if applicable: (1) the cost of the arbitrator chosen by the Party to sit on the three member panel and one half of the cost of the third arbitrator chosen; or (2) one half the cost of the single arbitrator jointly chosen by the Parties.

16.6.5 Non-binding dispute resolution procedures. If a Party has submitted a Notice of Dispute pursuant to Section 16.6.1, and the Parties are unable to resolve the claim or dispute through unassisted or assisted negotiations within the thirty (30) Calendar Days provided in that section, and the Parties cannot reach mutual agreement to pursue the Section 16.6.2 arbitration process, a Party may request that Transmission Provider engage in Nonbinding Dispute Resolution pursuant to this section by providing written notice to Transmission Provider ("Request for Non-binding Dispute Resolution"). Conversely, either Party may file a Request for Non-binding Dispute Resolution pursuant to this section without first seeking mutual agreement to pursue the Section 16.6.2 arbitration process. The process in Section 16.6.5 shall serve as an alternative to, and not a replacement of, the Section 16.6.2 arbitration process. Pursuant to this process, a transmission provider must within 30 days of receipt of the Request for Non-binding Dispute Resolution appoint a neutral decision-maker that is an independent subcontractor that shall not have any current or past substantial business or financial relationships with either Party. Unless otherwise agreed by the Parties, the decision-maker shall render a decision within sixty (60) Calendar Days of appointment and shall notify the Parties in writing of such decision and reasons therefore. This decision-maker shall be authorized only to interpret and apply the provisions of the LGIP and LGIA and shall have no power to modify or change any provision of the LGIP and LGIA in any manner. The result reached in this process is not binding, but, unless otherwise agreed, the Parties may cite the record and decision in the non-binding dispute resolution process in future dispute resolution processes, including in a Section 16.6.2 arbitration, or in a Federal Power Act section 206 complaint. Each Party shall be responsible for its own costs incurred during the process and the cost of the decision-maker shall be divided equally among each Party to the dispute.

16.7 Local Furnishing Bonds.

16.7.1 Transmission Providers That Own Facilities Financed by Local Furnishing Bonds.
This provision is applicable only to a Transmission Provider that has financed facilities for the local furnishing of electric energy with tax-exempt bonds, as described in Section 142(f) of the Internal Revenue Code ("local furnishing bonds"). Notwithstanding any other provision of this LGIA and LGIP, Transmission Provider shall not be required to provide Interconnection Service to Interconnection Customer pursuant to this LGIA and LGIP if the provision of such Transmission Service would jeopardize the tax-exempt status of any local furnishing bond(s) used to finance Transmission Provider's facilities that would be used in providing such Interconnection Service.

16.7.2 Alternative Procedures for Requesting Interconnection Service.
If Transmission Provider determines that the provision of Interconnection Service requested by Interconnection Customer would jeopardize the tax-exempt status of any local furnishing bond(s) used to finance its facilities that would be used in providing such Interconnection

Service, it shall advise the Interconnection Customer within thirty (30) Calendar Days of receipt of the Interconnection Request.

Interconnection Customer thereafter may renew its request for interconnection using the process specified in Article 5.2(ii) of the Transmission Provider's Tariff.

APPENDIX 1 to the LGIP
INFORMATIONAL INTERCONNECTION STUDY REQUEST
[Applicable to Section 3 Informational Interconnection Study Process, applicable only to Definitive Interconnection Study Process]

1. The undersigned Interconnection Customer submits this request to evaluate the interconnection of its Generating Facility with Transmission Provider's Transmission System pursuant to the Tariff.

2. The type of interconnection service to be evaluated (check one):
_____Energy Resource Interconnection Service
_____Network Resource Interconnection Service

3. Interconnection Customer provides the following information:

a. Address or location or the proposed new Large Generating Facility site (to the extent known) or, in the case of an existing Generating Facility, the name and specific location of the existing Generating Facility;

b. Maximum summer at ____ degrees C and winter at _____ degrees C megawatt electrical output of the proposed new Large Generating Facility or the amount of megawatt increase in the generating capacity of an existing Generating Facility;

c. General description of the equipment configuration;

d. Commercial Operation Date to be studied (Day, Month, and Year);

e. Name, address, telephone number, and e-mail address of Interconnection Customer's contact person;

f. Approximate location of the proposed Point of Interconnection;

g. Interconnection Customer Data (set forth in Attachment A)

h. Primary frequency response operating range for electric storage resources.

i. Requested capacity (in MW) of Interconnection Service (if lower than the Generating Facility Capacity); and

j. A Scope of Work including any additional information that may be reasonably required.

4. $10,000 study deposit amount as specified in the LGIP.

5. For study purposes, the point of delivery to deliver within the Control Area or to adjoining Control Area if the Generating Facility is not designated a Network Resource pursuant to Section 30.2 of the Tariff.

6. This Informational Interconnection Study Request shall be submitted to the representative indicated below:

[To be completed by Transmission Provider]

7. Representative of Interconnection Customer to contact:

[To be completed by Interconnection Customer]

8. This Interconnection Request is submitted by:

Name of Interconnection Customer: _____

By (signature): _____

Name (type or print): _____

Title: _____

Date: _____

ATTACHMENT A TO APPENDIX 1
Informational Interconnection Study Request

LARGE GENERATING FACILITY DATA

UNIT RATINGS

kVA _____ **°F _____** **Voltage _____**
Power Factor _____
Speed (RPM) _____ **Connection (e.g. Wye) _____**
Short Circuit Ratio _____ **Frequency, Hertz _____**
Stator Amperes at Rated kVA **_____** **Field Volts _____**
Max Turbine MW _____ **°F _____**

Primary frequency response operating range for electric storage resources.

Minimum State of Charge: _____

Maximum State of Charge: _____

COMBINED TURBINE-GENERATOR-EXCITER INERTIA DATA

Inertia Constant, H =_____kW sec/kVA
Moment-of-Inertia, WR2 =_____lb. ft.2

REACTANCE DATA (PER UNIT-RATED KVA)

DIRECT AXIS QUADRATURE AXIS

Synchronous – saturated	Xdv__	Xqv___
Synchronous – unsaturated	Xdi___	Xqi____
Transient – saturated	X'dv__	X'qv___
Transient – unsaturated	X'di___	X'qi____
Subtransient – saturated	X”dv__	X”qv_____
Subtransient – unsaturated	X”di___	X”qi___
Negative Sequence – saturated	X2v___	
Negative Sequence – unsaturated	X2i____	
Zero Sequence – saturated	X0v___	
Zero Sequence – unsaturated	X0i___	
Leakage Reactance	Xlm___	
Open Circuit	T'do___	T'qo___
Three-Phase Short Circuit Transient	T'd3_____	T'q____
Line to Line Short Circuit Transient	T'd1___	
Short Circuit Subtransient	T”d____	T”q____
Open Circuit Subtransient	T'd2____	
Line to Neutral Short Circuit Transient	T”do___	T”qo___

FIELD TIME CONSTANT DATA (SEC)
ARMATURE TIME CONSTANT DATA (SEC)

Three Phase Short Circuit	Ta3_____
Line to Line Short Circuit	Ta2_____
Line to Neutral Short Circuit	Ta1_____

NOTE: If requested information is not applicable, indicate by marking "N/A."

MW CAPABILITY AND PLANT CONFIGURATION
LARGE GENERATING FACILITY DATA

ARMATURE WINDING RESISTANCE DATA (PER UNIT)

Positive	R1_____
Negative	R2_____
Zero	R0_____

Rotor Short Time Thermal Capacity I22t = _____
Field Current at Rated kVA, Armature Voltage and PF =_____amps
Field Current at Rated kVA and Armature Voltage, 0 PF =_____amps
Three Phase Armature Winding Capacitance =_____microfarad
Field Winding Resistance = _____ ohms _____°C
Armature Winding Resistance (Per Phase) =_____ ohms _____°C

CURVES

Provide Saturation, Vee, Reactive Capability, Capacity Temperature Correction curves. Designate normal and emergency Hydrogen Pressure operating range for multiple curves.

GENERATOR STEP-UP TRANSFORMER DATA RATINGS

Capacity Self-cooled/
Maximum Nameplate

_____/_____kVA

Voltage Ratio(Generator Side/System side/Tertiary)
_____/_____/_____kV

Winding Connections (Low V/High V/Tertiary V (Delta or Wye))
_____/_____/_____

Fixed Taps Available _____

Present Tap Setting _____

If more than one transformer stage is used to deliver the output from the proposed generator to the Transmission System, please provide the information above for each transformer or transformer type.

IMPEDANCE

Positive

Z1 (on self-cooled kVA rating) _____%_____X/R

Zero

Z0 (on self-cooled kVA rating) _____%_____X/R

EXCITATION SYSTEM DATA

Identify appropriate IEEE model block diagram of excitation system and power system stabilizer (PSS) for computer representation in power system stability simulations and the corresponding excitation system and PSS constants for use in the model.

GOVERNOR SYSTEM DATA

Identify appropriate IEEE model block diagram of governor system for computer representation in power system stability simulations and the corresponding governor system constants for use in the model.

WIND GENERATORS

Number of generators to be interconnected pursuant to this Interconnection Request: _____

Elevation: _____ Single Phase _____Three Phase _____

Inverter manufacturer, model name, number, and version:

_____

List of adjustable setpoints for the protective equipment or software:

_____

Note: A completed General Electric Company Power Systems Load Flow ("PSLF") data sheet or other compatible formats, such as IEEE and PTI power flow models, must be supplied with the Interconnection Request. If other data sheets are more appropriate to the proposed device, then they shall be provided and discussed at Scoping Meeting.

INDUCTION GENERATORS

(*) Field Volts: _____
(*) Field Amperes: _____
(*) Motoring Power (kW): _____
(*) Neutral Grounding Resistor (If Applicable: _____

(*) I22t or K (Heating Time Constant): _____
(*) Rotor Resistance: _____
(*) Stator Resistance: _____
(*) Stator Reactance: _____
(*) Rotor Reactance: _____
(*) Magnetizing Reactance: _____
(*) Short Circuit Reactance: _____
(*) Exciting Current: _____
(*) Temperature Rise: _____
(*) Frame Size: _____
(*) Design Letter: _____
(*) Reactive Power Required In Vars (No Load): _____
(*) Reactive Power Required In Vars (Full Load): _____
(*) Total Rotating Inertia, H: _____Per Unit on KVA Base

Note: Please consult Transmission Provider prior to submitting the Informational Interconnection Study Request to determine if the information designated by (*) is required.

APPENDIX 2 to the LGIP
INFORMATIONAL INTERCONNECTION STUDY AGREEMENT
[Applicable to Section 3 Informational Interconnection Study Process, applicable only to Definitive Interconnection Study Process]

THIS AGREEMENT is made and entered into this___day of _____, 20___ by and between_____, a _____ organized and existing under the laws of the State of_____, ("Interconnection Customer,") and _____a _____existing under the laws of the State of _____, ("Transmission Provider"). Interconnection Customer and Transmission Provider each may be referred to as a "Party," or collectively as the "Parties."

RECITALS

WHEREAS, Interconnection Customer is evaluating developing a Generating Facility or generating capacity addition to an existing Generating Facility; and

WHEREAS, Interconnection Customer is proposing to evaluate an interconnection with the Transmission System; and

WHEREAS, Interconnection Customer has submitted to Transmission Provider an Informational Interconnection Study Interconnection Request; and

NOW, THEREFORE, in consideration of and subject to the mutual covenants contained herein the Parties agree as follows:

1.0 When used in this Agreement, with initial capitalization, the terms specified shall have the meanings indicated in in Transmission Provider's FERC-approved LGIP.

2.0 Interconnection Customer elects and Transmission Provider shall cause an Informational Interconnection Study consistent with Section 3 of this LGIP to be performed in accordance with the Tariff.

3.0 The scope of the Informational Interconnection Study shall be subject to the assumptions set forth in Attachment A to this Agreement.

4.0 The Informational Interconnection Study shall be performed solely for informational purposes.

5.0 The Informational Interconnection Study report shall provide an analysis based on the assumptions specified by Interconnection Customer in Attachment A to this Agreement, as agreed to by the Transmission Provider. The Informational Interconnection Study shall preliminarily identify Transmission Provider's Interconnection Facilities and the Network Upgrades, and the estimated cost thereof that may be required to interconnect the proposed Generating Facility based upon the assumptions specified by Interconnection Customer in Attachment A.

6.0 Interconnection Customer shall provide a deposit of ten thousand dollars ($10,000.00) for the performance of the Informational Interconnection Study. Transmission Provider's good faith estimate for the time of completion of the Informational Interconnection Study is [insert date].

Upon receipt of the Informational Interconnection Study, Transmission Provider shall charge and Interconnection Customer shall pay the actual costs of the Informational Interconnection Study.

Any difference between the initial deposit and the actual cost of the study shall be paid by or refunded to Interconnection Customer, as appropriate.

7.0 Miscellaneous. The Informational Interconnection Study Agreement shall include standard miscellaneous terms including, but not limited to, indemnities, representations, disclaimers, warranties, governing law, amendment, execution, waiver, enforceability and assignment, that reflect best practices in the electric industry, and that are consistent with regional practices, Applicable Laws and Regulations, and the organizational nature of each Party. All of these provisions, to the extent practicable, shall be consistent with the provisions of the LGIP and the LGIA.

IN WITNESS WHEREOF, the Parties have caused this Agreement to be duly executed by their duly authorized officers or agents on the day and year first above written.

[Insert name of Transmission Provider]

By: _____
Title: _____
Date: _____

[Insert name of Interconnection Customer]

By: _____
Title: _____
Date: _____

ATTACHMENT A
Informational Interconnection Study Agreement

ASSUMPTIONS USED IN CONDUCTING THE INFORMATIONAL STUDY

[Assumptions to be completed by Interconnection Customer and Transmission Provider]

APPENDIX 3 to the LGIP
INTERCONNECTION REQUEST FOR A
LARGE GENERATING FACILITY

1. The undersigned Interconnection Customer submits this request to interconnect its Large Generating Facility with Transmission Provider's Transmission System pursuant to a Tariff.

2. This Interconnection Request is for (check one):
   _____ A proposed new Large Generating Facility.
   _____ An increase in the generating capacity or a Material Modification of an existing Generating Facility.
   ____ A Generating Facility proposed for inclusion in a Resource Solicitation Process.
   ____ Replacement of Existing Generating Facility with no increase in capacity.
   _____ Provisional Interconnection Service related to an existing Interconnection Request or Interconnection Agreement. Existing Interconnection Queue Number associated with Provisional Interconnection Service Request is _____
   _____ Surplus Interconnection Service related to an existing Large Generator Interconnection Agreement (LGIA). Existing LGIA Customer offering Surplus Interconnection Service

   _____

   Surplus Interconnection Customer

   _____

   Existing Large Generating Facility Location and Related Point of Interconnection where Surplus Interconnection Service is offered

   _____

   _____

   For Surplus Interconnection Service, also include (1) proof that existing LGIA Customer and Surplus Interconnection Customer have entered into a Surplus arrangement and (2) the System Impact Study performed for the existing Generating Facility with its application or indicate that such study is not available.

3. The type of interconnection service requested (check one):
   _____ Energy Resource Interconnection Service
   _____ Network Resource Interconnection Service

4. _____ Check here only if Interconnection Customer requesting Network Resource Interconnection Service also seeks to have its Generating Facility studied for Energy Resource Interconnection Service (For Serial Interconnection Study Process Only)

5. Interconnection Customer provides the following information for a proposed new Large Generating Facility, an increase to generating capacity or a Material Modification of an existing Generating Facility, or

for Provisional Service related to an existing Interconnection Request or Interconnection Agreement. For Surplus Interconnection Service, the applicant provides the following information for the Surplus Generator that plans to utilize the Surplus Interconnection Service offered at the existing Large Generator Interconnection Customer's Point of Interconnection.

a. Address or location or the proposed new Large Generating Facility site (to the extent known) or, in the case of an existing Generating Facility, the name and specific location of the existing Generating Facility;

b. Maximum summer at ____ degrees C and winter at _____ degrees C megawatt electrical output of the proposed new Large Generating Facility or the amount of megawatt increase in the generating capacity of an existing Generating Facility;

c. General description of the equipment configuration;

d. Commercial Operation Date (Day, Month, and Year);

e. Name, address, telephone number, and e-mail address of Interconnection Customer's contact person;

f. Approximate location of the proposed Point of Interconnection (optional);

g. Interconnection Customer Data (set forth in Attachment A, Attachment B, and Attachment C)

h. Primary frequency response operating range for electric storage resources.

i. Requested capacity (in MW) of Interconnection Service (if lower than the Generating Facility Capacity).

j. If this Interconnection Request is for Generation Replacement, Interconnection Customer must submit:
Planned or Actual date of cessation of operation for the Existing Generating Facility:_____
Expected Commercial Operation Date for the Replacement Generating Facility:_____

6. Interconnection Customer provides applicable study deposit amount as specified in the LGIP.

For the Serial Interconnection Study Process, an Interconnection Customer shall submit a refundable deposit of $10,000.

For the Definitive Interconnection Study Process, an Interconnection Customer shall submit an application fee of $5,000 and the applicable deposit amount listed below:

$20,000 plus one dollar ($1.00) per kWac for requests < 20 MW requesting NRIS, or

$35,000 plus one dollar ($1.00) per kWac for requests ≥ 20 MW < 50 MW, or

50,000 plus one dollar ($1.00) per kWac for requests ≥ 50 MW < 80MW, or

$150,000 for requests ≥ 80 MW < 200 MW; or

$250,000 for requests ≥ 200 MW.

For the Generation Replacement process, an Interconnection Customer shall submit a study deposit in the amount of $50,000.

7. For the Definitive Interconnection Study Process, Interconnection Customer shall also be responsible for providing (1) one times (1x) the applicable study deposit amount and (2) either (a.) achieving Readiness Milestone 1 (M1) or (b.) providing additional security prior to the close of the Customer Engagement Window as specified in Sections 10.1, 10.8(a.), and 10.11.6 of the LGIP.

8. If requesting NRIS: Interconnection Customer provides the expected point of delivery to deliver within the Transmission Provider's Control Area or to an adjoining Control Area if the Generating Facility is not designated a Network Resource pursuant to Section 30.2 of the Tariff.

9. Interconnection Customer provides Evidence of Site Control as specified in the LGIP and Transmission Provider's business practices posted on OASIS or a deposit *in lieu* of Site Control as described in Section 4.4.1 or 4.4.2 of the LGIP.

10. Evidence of Site Control as specified in the LGIP (check one)

____ Is attached to this Interconnection Request

____ Will be provided at a later date prior to commencement of the Serial System Impact Study or Phase I of the Definitive Interconnection System Impact Study in accordance with this LGIP

____ Interconnection Customer may provide a deposit equal to $20,000 plus $500/MW in lieu of Site Control to enter Phase 1 of the Definitive Interconnection Study Process. A deposit in lieu of Site Control is not accepted for later Phases of the study process.

11. This Interconnection Request shall be submitted to the representative indicated below:

[To be completed by Transmission Provider]

12. Representative of Interconnection Customer to contact:

[To be completed by Interconnection Customer]

13. This Interconnection Request is submitted by:

Name of Interconnection Customer: _____

By (signature): _____

Name (type or print): _____

Title: _____

Date: _____

ATTACHMENT A TO APPENDIX 3
INTERCONNECTION REQUEST

SITE CONTROL AND ADEQUACY

Total acres required to construct the Generating Facility: _____

Total acres under Site Control for the Generating Facility at the time of application: _____

Is Site Control required for Interconnection Facilities, i.e. transmission gen-tie or substation, to interconnect the Generating Facility? ___ Y ___ N

If yes, how many miles of gen-tie right-of-way are required? _____
What is the total number of acres required to build the gen-tie? _____
How many miles of gen-tie right-of-way are under Site Control at the time of this application? _____

List any local, state, or federal government permits required to construct the Generating Facility and any applicable Interconnection Facilities, i.e. transmission gen-tie:

_____
_____

ATTACHMENT B TO APPENDIX 3
INTERCONNECTION REQUEST

LARGE GENERATING FACILITY DATA (Synchronous)
See Attachment C for Inverter-Based Resources

UNIT RATINGS

kVA _____ °F _____ Voltage _____
Power Factor _____
Speed (RPM) _____ Connection (e.g. Wye) _____
Short Circuit Ratio _____ Frequency, Hertz _____
Stator Amperes at Rated kVA _____ Field Volts _____
Max Turbine MW _____ °F _____

Primary frequency response operating range for electric storage resources:

Minimum State of Charge:_____
Maximum State of Charge:_____

COMBINED TURBINE-GENERATOR-EXCITER INERTIA DATA

Inertia Constant, H = _____ kW sec/kVA
Moment-of-Inertia, WR^2 = _____ lb. $ft.^2$

REACTANCE DATA (PER UNIT-RATED KVA)

		DIRECT AXIS		**QUADRATURE AXIS**	
Synchronous – saturated	X_{dv}	_____	X_{qv}	_____
Synchronous – unsaturated	X_{di}	_____	X_{qi}	_____
Transient – saturated	X'_{dv}	_____	X'_{qv}	_____
Transient – unsaturated	X'_{di}	_____	X'_{qi}	_____
Subtransient – saturated	X''_{dv}	_____	X''_{qv}	_____
Subtransient – unsaturated	X''_{di}	_____	X''_{qi}	_____
Negative Sequence – saturated	$X2_v$	_____		
Negative Sequence – unsaturated	$X2_i$	_____		
Zero Sequence – saturated	$X0_v$	_____		
Zero Sequence – unsaturated	$X0_i$	_____		
Leakage Reactance	Xl_m	_____		

FIELD TIME CONSTANT DATA (SEC)

Open Circuit	T'_{do}	_____	T'_{qo}	_____
Three-Phase Short Circuit Transient	T'_{d3}	_____	T'_{q}	_____
Line to Line Short Circuit Transient	T'_{d2}	_____		
Line to Neutral Short Circuit Transient	T'_{d1}	_____		
Short Circuit Subtransient	T''_{d}	_____	T''_{q}	_____
Open Circuit Subtransient	T''_{do}	_____	T''_{qo}	_____

TIME CONSTANT DATA (SEC)

Three Phase Short Circuit	T_{a3}	_____
Line to Line Short Circuit	T_{a2}	_____
Line to Neutral Short Circuit	T_{a1}	_____

NOTE: If requested information is not applicable, indicate by marking "N/A."

MW CAPABILITY AND PLANT CONFIGURATION
LARGE GENERATING FACILITY DATA

ARMATURE WINDING RESISTANCE DATA (PER UNIT)

Positive	R_1	_____
Negative	R_2	_____
Zero	R_0	_____

Rotor Short Time Thermal Capacity I_2^2t = _____
Field Current at Rated kVA, Armature Voltage and PF = _____ amps
Field Current at Rated kVA and Armature Voltage, 0 PF = _____ amps
Three Phase Armature Winding Capacitance = _____ microfarad
Field Winding Resistance = _____ ohms _____ °C
Armature Winding Resistance (Per Phase) = _____ ohms _____ °C

CURVES

Provide Saturation, Vee, Reactive Capability, Capacity Temperature Correction curves. Designate normal and emergency Hydrogen Pressure operating range for multiple curves.

GENERATOR STEP-UP TRANSFORMER DATA RATINGS

Capacity (Self-cooled/Maximum Nameplate)
_____/_____kVA

Voltage Rating(High V/ Low V/ Tertiary V)
_____/_____/_____kV

Winding Connections (High V/ Low V/ Tertiary V (Delta or Wye))
_____/_____/_____

De-energized Taps Available _____

Present or Planned Tap Setting _____

Transformer Impedance

Positive Z_1 (on self-cooled kVA rating)_____ % _____ X/R

Zero Z_0 (on self-cooled kVA rating)_____ % _____ X/R

If more than one transformer stage is used to deliver the output from the proposed Generating Facility to the Transmission System, please provide the information above for each transformer

EXCITATION SYSTEM DATA

Identify appropriate IEEE model block diagram of excitation system and power system stabilizer (PSS) for computer representation in power system stability simulations and the corresponding excitation system and PSS constants for use in the model.

GOVERNOR SYSTEM DATA

Identify appropriate IEEE model block diagram of governor system for computer representation in power system stability simulations and the corresponding governor system constants for use in the model.

INDUCTION GENERATORS

(*) Field Volts: _____
(*) Field Amperes: _____
(*) Motoring Power (kW): _____
(*) Neutral Grounding Resistor (If Applicable): _____
(*) I_2^2t or K (Heating Time Constant): _____
(*) Rotor Resistance: _____
(*) Stator Resistance: _____
(*) Stator Reactance: _____
(*) Rotor Reactance: _____
(*) Magnetizing Reactance: _____
(*) Short Circuit Reactance: _____
(*) Exciting Current: _____
(*) Temperature Rise: _____
(*) Frame Size: _____
(*) Design Letter: _____
(*) Reactive Power Required In Vars (No Load): _____
(*) Reactive Power Required In Vars (Full Load): _____
(*) Total Rotating Inertia, H: _____Per Unit on KVA Base

Note: Please consult Transmission Provider prior to submitting the Interconnection Request to determine if the information designated by (*) is required.

ATTACHMENT C TO APPENDIX 3
INTERCONNECTION REQUEST

LARGE GENERATING FACILITY DATA (INVERTER-BASED RESOURCES)

1. **Requested Net MW Injection at the POI:** _____ MW

   Gross Inverter Nameplate Capability: _____ MVA (total of all inverters)
   Station Service Load: _____ MW ____ Mvar

   Additional Information for Storage (For DC-connected batteries, include the following data on the solar inverter data sheet. For AC-connected batteries, complete a separate data sheet.)
   MW Rating of Storage: _____ MW for Time: _____ Hours
   Gross Energy Rating: _____ MW-HR
   Maximum State of Charge: _____ pu
   Minimum State of Charge: _____ pu

2. **Simplified One-Line Diagram.** This should be similar to the Figure below. If different, mark the differences on the diagram below or provide a new diagram.

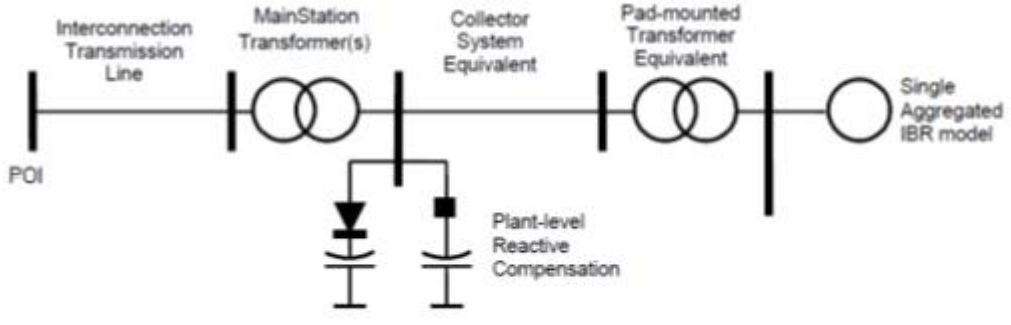

3. **Interconnection Tie Line.**
   a) Point of Interconnection (substation or line name): _____
   b) Line voltage: _____ kV, line rating at ___°F ambient: _____ MVA, line length: _____ Miles/Feet
   c) R_1 = _____ ohm or _____ pu on 100 MVA and line kV base (positive sequence)
   d) X_1 = _____ ohm or _____ pu on 100 MVA and line kV base (positive sequence)
   e) B_1 = _____ μF or _____ pu on 100 MVA and line kV base (positive sequence)
   f) R_0 = _____ ohm or _____ pu on 100 MVA and line kV base (zero sequence)
   g) X_0 = _____ ohm or _____ pu on 100 MVA and line kV base (zero sequence)

h) B_0 = _____ μF or _____ pu on 100 MVA and line kV base (zero sequence)

4. **Main Transformer.** Number of main transformers: _____

Two-Winding Main Transformer Data (as applicable):

a) Rating (ONAN/ONAF/ONAF): _____ / _____ / _____ MVA

b) Nominal Voltage for each winding (High/Low): _____ / _____ kV

c) Winding Connections (High/Low): [Delta or Wye] / [Delta or Wye]

d) Available tap positions: _____ / _____ / _____ / _____ / _____ kV **or** _____ % _____ # of taps.

e) Positive sequence impedance Z_1: _____ %, _____ X/R on self-cooled (ONAN) MVA rating above.

f) Zero sequence impedance Z_0: _____ %, _____ X/R on self-cooled (ONAN) MVA rating above.

g) For pad-mounted transformer, construction: 3 / 4 / 5 -legged

Three-Winding Main Transformer Data (as applicable)

h) Connection and winding (please attach diagram and mark to reference this form).

	H Winding Data	**X Winding Data**	**Y Winding Data**
Full load ratings (i.e. ONAN/ONAF/ONAF)	_____/_____/_____ MVA	_____/_____/_____ MVA	_____/_____/_____ MVA
Rated voltage base	_____ kV Delta or Wye connected	_____ kV Delta or Wye connected	_____ kV Delta or Wye connected
Tap positions available	_____/ _____/ _____/ _____/ _____ kV	_____/ _____/ _____/ _____/ _____ kV	_____/ _____/ _____/ _____/ _____ kV
Present Tap Setting (if applicable)	_____ kV	_____ kV	_____ kV
Neutral solidly grounded? (or) Neutral Grounding Resistor (if applicable)	_____ _____ Ohms	_____ _____ Ohms	_____ _____ Ohms
BIL rating	_____ kV	_____ kV	_____ kV

Three-Winding Main Transformer Impedance Data (as applicable)

	H-X Winding Data	**H-Y Winding Data**	**X-Y Winding Data**
Transformer base for impedances provided	_____ MVA	_____ MVA	_____ MVA
Positive sequence impedance Z_1	_____ % _____ X/R	_____ % _____ X/R	_____ % _____ X/R
Zero sequence impedance Z_0	_____ % _____ X/R	_____ % _____ X/R	_____ % _____ X/R

5. **Collector System Equivalent Model**. (Calculated as per "WECC Guide for Representation of Photovoltaic Systems in Large-Scale Load Flow Simulations", January 2011)
   a) Collector system one-line diagram attached: _____
   b) Collector system voltage = _____ kV
   c) Collector system equivalent impedance:
      i) R_1 = _____ ohm or _____ pu on 100 MVA and collector kV base (positive sequence)
      ii) X_1 = _____ ohm or _____ pu on 100 MVA and collector kV base (positive sequence)
      iii) C_1 = _____ μF or B_1 = _____ pu on 100 MVA and collector kV base (positive sequence)
      iv) R_0 = _____ ohm or _____ pu on 100 MVA and collector kV base (zero sequence)
      v) X_0 = _____ ohm or _____ pu on 100 MVA and collector kV base (zero sequence)
      vi) C_0 = _____ μF or B_0 = _____ pu on 100 MVA and collector kV base (zero sequence)

6. Must include spreadsheet of individual, detailed cable impedances _____**Inverter Step-Up Transformers.**
   a) Number of inverter step-up transformers: _____ Rating: _____/_____/_____ MVA

   Two-Winding Inverter Step-Up Transformer Data (as applicable):
   b) Nominal Voltage for each winding (High/Low): _____ / _____ kV
   c) Winding Connections: High: Delta or Wye / Low: Delta or Wye
   d) Available taps: _____ / _____ / _____ / _____ / _____ kV **or** _____ % _____ # of taps.
   e) Positive sequence impedance (Z_1) _____ %, _____ X/R on MVA rating above.
   f) Zero sequence impedance (Z_0) _____ %, _____ X/R on MVA rating above.

Three-Winding Inverter Step-Up Transformer Data (as applicable)

g) Connection and winding (attach diagram and mark to reference this form).

	H Winding Data	**X Winding Data**	**Y Winding Data**
Full load ratings (i.e. ONAN/ONAF/ONAF)	_____/_____/_____ MVA	_____/_____/_____ MVA	_____/_____/_____ MVA
Rated voltage base	_____ kV Delta or Wye connected	_____ kV Delta or Wye connected	_____ kV Delta or Wye connected
Tap positions available	_____/ _____/ _____/ _____/ _____ kV	_____/ _____/ _____/ _____/ _____ kV	_____/ _____/ _____/ _____/ _____ kV
Present Tap Setting (if applicable)	_____ kV	_____ kV	_____ kV
Neutral solidly grounded? (or) Neutral Grounding Resistor (if applicable)	_____ _____ Ohms	_____ _____ Ohms	_____ _____ Ohms
BIL rating	_____ kV	_____ kV	_____ kV

Three-Winding Inverter Step-Up Transformer Impedance Data (as applicable)

	H-X Winding Data	**H-Y Winding Data**	**X-Y Winding Data**
Transformer base for impedances provided	_____ MVA	_____ MVA	_____ MVA
Positive sequence impedance Z_1	_____ % _____ X/R	_____ % _____ X/R	_____ % _____ X/R
Zero sequence impedance Z_0	_____ % _____ X/R	_____ % _____ X/R	_____ % _____ X/R

7. **Inverter and IBR Data.**

a) Number of Inverters: _____

b) Inverter Capability at _____°F: _____ kW/ _____ kVA

c) Inverter Temperature Derating Curve attached: ____

d) Power Factor: Leading Lagging

e) IBR kW vs kvar capability curve attached: _____at ____°F

f) Inverter Manufacturer and Model #: _____

g) IBR Module (e.g. solar panel or battery) Manufacturer and Model #: _____

h) Provide with this form appropriate dynamic models for the IBR. Including a power plant control model that provides volt/var control and active power/frequency control functions, in a Siemens/PTI PSS/E format. Provide BOTH user-written models AND generic (recommended REGCAU1, REECAU1, REECC1, and REPCAU1 or similar as requested by Transmission Owner-TO) models. The user-written models shall include the model characteristics, block diagrams, values and names for all model parameters and a list of all state variables. All of the associated files for dynamic modeling should be in PSS/E version 33 and 34 formats. The generic models will be shared in the interconnection-wide based cases.[1] Check here to indicate all required files are attached: _____

8. **Plant Reactive Power Compensation** (beyond the inverters' built-in reactive capability)**.**

a) Type of reactive compensation device(s): _____

b) Individual fixed shunt reactive device type: _____

- Number and size of each: _____×_____ MVA

c) Dynamic reactive control device (e.g., SVC, STATCOM): _____

d) Control range: _____ Mvar (lead) to _____ Mvar (lag)

e) Control mode (e.g., voltage, power factor, reactive power): _____

f) Regulation point: _____

g) Describe the overall reactive power control strategy: _____

h) Provide with this form the dynamic modeling data in a Siemens/PTI PSS/E standard model. If a user-written model is submitted in place of a generic model, it must include the model characteristics, including block diagrams, values and names for all model parameters, and a list of all state variables. All of the associated files for dynamic modeling should be in the PSS/E version requested by TO and must be shareable on an interconnection-wide basis to support use in the interconnection-wide cases.[2] Check here to indicate all required files are attached: _____

9. **Short Circuit Contribution of the Facility at the Point of Interconnection.**

a) Maximum Three Phase Fault Current: _____ Amps and Duration: _____

b) Maximum Single Line to Ground Fault* Current: _____ Amps and Duration: _____

Model and parameter data required for short-circuit analysis is specific to each PV inverter make and model. All data to be provided in per-unit ohms, on the equivalent inverter MVA base.

[1] As required by NERC Reliability Standard MOD-32-1.
[2] As required by NERC Reliability Standard MOD-32-1.

- Inverter Equivalent MVA Base: _____ MVA
- Short-Circuit Equivalent Pos. Seq. Resistance (R1), valid for initial 4 to 6 cycles: _____ pu.
- Short-Circuit Equivalent Pos. Seq. Reactance (XL1), valid for initial 4 to 6 cycles: _____ pu.
- Short-Circuit Equivalent Neg. Seq. Resistance (R2), valid for initial 4 to 6 cycles: _____ pu.
- Short-Circuit Equivalent Neg. Seq. Reactance (XL2), valid for initial 4 to 6 cycles: _____ pu.
- Short-Circuit Equivalent Zero Seq. Resistance (R0), valid for initial 4 to 6 cycles: _____ pu.
- Short-Circuit Equivalent Zero Seq. Reactance (XL0), valid for initial 4 to 6 cycles: _____ pu.
- Special notes regarding short-circuit modeling assumptions:
  _____
  _____
  _____
  _____
  _____
  _____
  _____

  * Single Line to Ground Fault at the Point of Interconnection with ties to utility at the POI open.

APPENDIX 4 TO LGIP
INTERCONNECTION FEASIBILITY STUDY AGREEMENT
[Applicable to Section 8 Serial Interconnection Feasibility Study Process]

THIS AGREEMENT is made and entered into this___day of _____, 20___ by and between_____, a _____ organized and existing under the laws of the State of _____, ("Interconnection Customer,") and _____, a existing under the laws of the State of _____, ("Transmission Provider "). Interconnection Customer and Transmission Provider each may be referred to as a "Party," or collectively as the "Parties."

RECITALS

WHEREAS, Interconnection Customer is proposing to develop a Large Generating Facility or generating capacity addition to an existing Generating Facility consistent with the Interconnection Request submitted by Interconnection Customer dated _____ ; and

WHEREAS, Interconnection Customer desires to interconnect the Large Generating Facility with the Transmission System; and

WHEREAS, Interconnection Customer has requested Transmission Provider to perform an Interconnection Feasibility Study to assess the feasibility of interconnecting the proposed Large Generating Facility to the Transmission System, and of any Affected Systems;

NOW, THEREFORE, in consideration of and subject to the mutual covenants contained herein the Parties agreed as follows:

1.0 When used in this Agreement, with initial capitalization, the terms specified shall have the meanings indicated in Transmission Provider's FERC-approved LGIP.

2.0 Interconnection Customer elects and Transmission Provider shall cause to be performed an Interconnection Feasibility Study consistent with Section 8 of this LGIP in accordance with the Tariff.

3.0 The scope of the Interconnection Feasibility Study shall be subject to the assumptions set forth in Attachment A to this Agreement.

4.0 The Interconnection Feasibility Study shall be based on the technical information provided by Interconnection Customer in the Interconnection Request, as may be modified as the result of the Scoping Meeting. Transmission Provider reserves the right to request additional technical information from Interconnection Customer as may reasonably become necessary consistent with Good Utility Practice during the course of the Interconnection Feasibility Study and as designated in accordance with Section 4.4.6 of the LGIP. If, after the designation of the Point of Interconnection pursuant to Section 4.4.6 of the LGIP, Interconnection Customer modifies its Interconnection Request pursuant to Section 5.4, the time to complete the Interconnection Feasibility Study may be extended.

5.0 The Interconnection Feasibility Study report shall provide the following information:

- preliminary identification of any circuit breaker short circuit capability limits exceeded as a result of the interconnection;

- preliminary identification of any thermal overload or voltage limit violations resulting from the interconnection; and

- preliminary description and non-bonding estimated cost of facilities required to interconnect the Large Generating Facility to the Transmission System and to address the identified short circuit and power flow issues.

6.0 Interconnection Customer shall provide a deposit of $10,000 for the performance of the Interconnection Feasibility Study.

Upon receipt of the Interconnection Feasibility Study Transmission Provider shall charge and Interconnection Customer shall pay the actual costs of the Interconnection Feasibility Study.

Any difference between the deposit and the actual cost of the study shall be paid by or refunded to Interconnection Customer, as appropriate.

7.0 Miscellaneous. The Interconnection Feasibility Study Agreement shall include standard miscellaneous terms including, but not limited to, indemnities, representations, disclaimers, warranties, governing law, amendment, execution, waiver, enforceability and assignment, that reflect best practices in the electric industry, and that are consistent with regional practices, Applicable Laws and Regulations, and the organizational nature of each Party. All of these provisions, to the extent practicable, shall be consistent with the provisions of the LGIP and the LGIA.

IN WITNESS WHEREOF, the Parties have caused this Agreement to be duly executed by their duly authorized officers or agents on the day and year first above written.

[Insert name of Transmission Provider or Transmission Owner, if applicable]

By: _____ By: _____

Title: _____ Title: _____

Date: _____ Date: _____

[Insert name of Interconnection Customer]

By: _____

Title: _____

Date: _____

Attachment A to Appendix 4
Interconnection Feasibility
Study Agreement

ASSUMPTIONS USED IN CONDUCTING THE INTERCONNECTION FEASIBILITY STUDY

The Interconnection Feasibility Study will be based upon the information set forth in the Interconnection Request and agreed upon in the Scoping Meeting held on _____:

Designation of Point of Interconnection and configuration to be studied.
Designation of alternative Point(s) of Interconnection and configuration.

[Above assumptions to be completed by Interconnection Customer and other assumptions to be provided by Interconnection Customer and Transmission Provider]

APPENDIX 5 TO LGIP
SERIAL INTERCONNECTION SYSTEM IMPACT STUDY AGREEMENT
[Applicable to Section 9 Serial Interconnection System Impact Study Process]

THIS AGREEMENT is made and entered into this___day of _____, 20___ by and between_____, a_____ organized and existing under the laws of the State of_____, ("Interconnection Customer,") and _____a existing under the laws of the State of _____, ("Transmission Provider "). Interconnection Customer and Transmission Provider each may be referred to as a "Party," or collectively as the "Parties."

RECITALS

WHEREAS, Interconnection Customer is proposing to develop a Large Generating Facility or generating capacity addition to an existing Generating Facility consistent with the Interconnection Request submitted by Interconnection Customer dated _____; and

WHEREAS, Interconnection Customer desires to interconnect the Large Generating Facility with the Transmission System;

WHEREAS, Transmission Provider has completed an Interconnection Feasibility Study (the "Feasibility Study") and provided the results of said study to Interconnection Customer (This recital to be omitted if Transmission Provider does not require the Interconnection Feasibility Study.); and

WHEREAS, Interconnection Customer has requested Transmission Provider to perform a Serial Interconnection System Impact Study to assess the impact of interconnecting the Large Generating Facility to the Transmission System, and of any Affected Systems;

NOW, THEREFORE, in consideration of and subject to the mutual covenants contained herein the Parties agreed as follows:

1.0 When used in this Agreement, with initial capitalization, the terms specified shall have the meanings indicated in Transmission Provider's FERC-approved LGIP.

2.0 Interconnection Customer elects and Transmission Provider shall cause to be performed a Serial Interconnection System Impact Study consistent with Section 9 of this LGIP in accordance with the Tariff.

3.0 The scope of the Serial Interconnection System Impact Study shall be subject to the assumptions set forth in Attachment A to this Agreement.

4.0 The Serial Interconnection System Impact Study will be based upon the results of the Interconnection Feasibility Study and the technical information provided by Interconnection Customer in the Interconnection Request, subject to any modifications in accordance with Section 5.4 of the LGIP. Transmission Provider reserves the right to request additional technical information from Interconnection Customer as may reasonably become necessary consistent with Good Utility Practice during the course of the Interconnection Customer

System Impact Study. If Interconnection Customer modifies its designated Point of Interconnection, Interconnection Request, or the technical information provided therein is modified, the time to complete the Interconnection System Impact Study may be extended.

5.0 The Serial Interconnection System Impact Study report shall provide the following information:

- identification of any circuit breaker short circuit capability limits exceeded as a result of the interconnection;

- identification of any thermal overload or voltage limit violations resulting from the interconnection;

- identification of any instability or inadequately damped response to system disturbances resulting from the interconnection and

- description and non-binding, good faith estimated cost of facilities required to interconnect the Large Generating Facility to the Transmission System and to address the identified short circuit, instability, and power flow issues.

6.0 Interconnection Customer shall provide a deposit of $50,000 for the performance of the Serial Interconnection System Impact Study. Transmission Provider's good faith estimate for the time of completion of the Interconnection System Impact Study is [insert date].

Upon receipt of the Serial Interconnection System Impact Study, Transmission Provider shall charge and Interconnection Customer shall pay the actual costs of the Interconnection System Impact Study.

Any difference between the deposit and the actual cost of the study shall be paid by or refunded to Interconnection Customer, as appropriate.

7.0 Miscellaneous. The Serial Interconnection System Impact Study Agreement shall include standard miscellaneous terms including, but not limited to, indemnities, representations, disclaimers, warranties, governing law, amendment, execution, waiver, enforceability and assignment, that reflect best practices in the electric industry, that are consistent with regional practices, Applicable Laws and Regulations and the organizational nature of each Party. All of these provisions, to the extent practicable, shall be consistent with the provisions of the LGIP and the LGIA.

IN WITNESS THEREOF, the Parties have caused this Agreement to be duly executed by their duly authorized officers or agents on the day and year first above written.

[Insert name of Transmission Provider or Transmission Owner, if applicable]

By:	_____	By:	_____
Title:	_____	Title:	_____
Date:	_____	Date:	_____

[Insert name of Interconnection Customer]

By: _____

Title: _____

Date: _____

ASSUMPTIONS USED IN CONDUCTING THE INTERCONNECTION SYSTEM IMPACT STUDY

The Serial Interconnection System Impact Study will be based upon the results of the Interconnection Feasibility Study, subject to any modifications in accordance with Section 5.4 of the LGIP, and the following assumptions:

Designation of Point of Interconnection and configuration to be studied.
Designation of alternative Point(s) of Interconnection and configuration.

[Above assumptions to be completed by Interconnection Customer and other assumptions to be provided by Interconnection Customer and Transmission Provider]

APPENDIX 6-1 TO LGIP – OVERVIEW & TIMELINE OF INITIATION OF A DISIS CLUSTER: THE DISIS REQUEST WINDOW, CUSTOMER ENGAGEMENT WINDOW, & DISIS PHASE 1

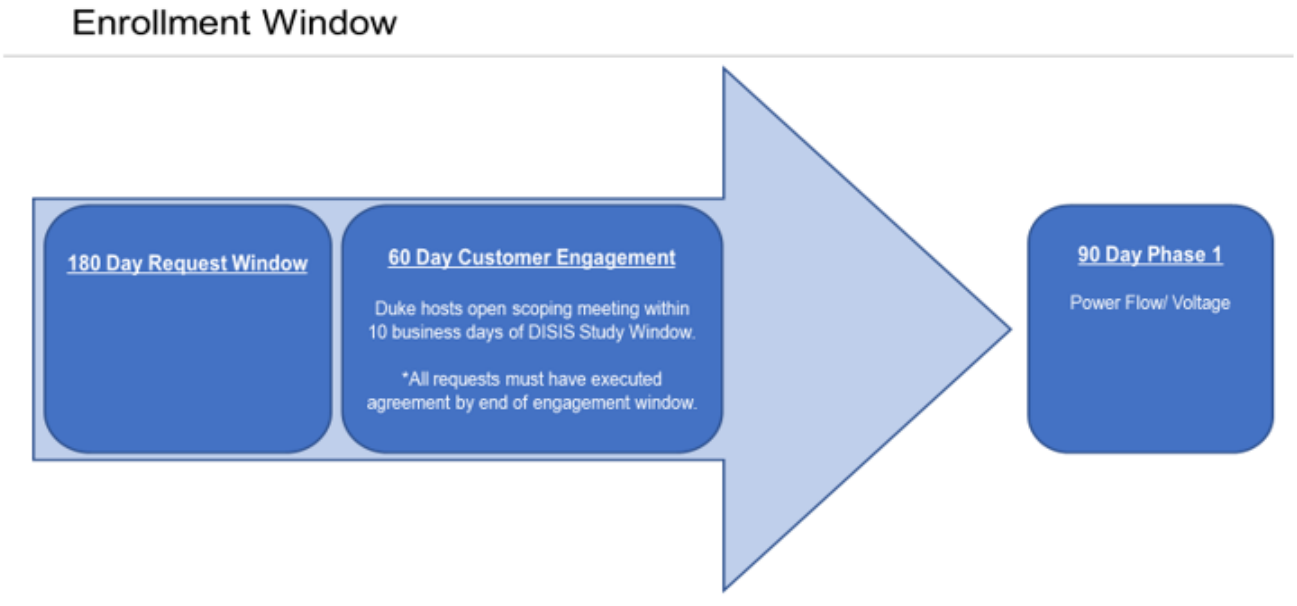

APPENDIX 6-2 TO LGIP – OVERVIEW AND TIMELINE OF DEFINITIVE INTERCONNECTION STUDY PROCESS, INCLUDING THE DISIS PROCESS

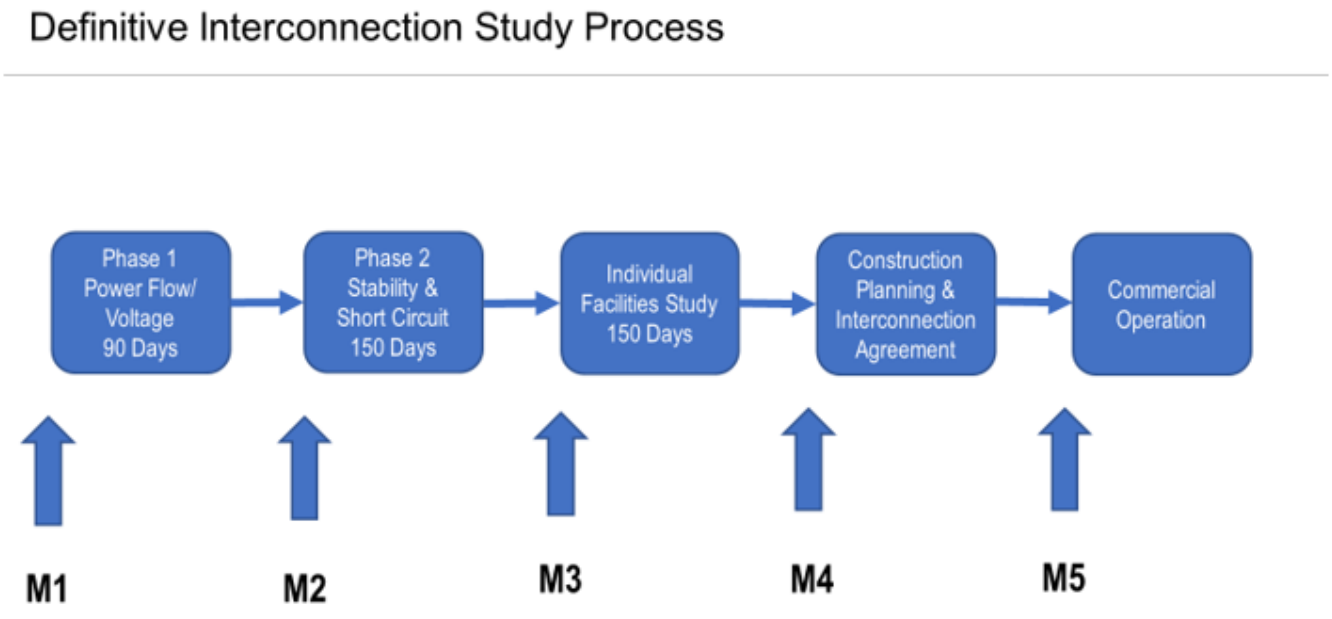

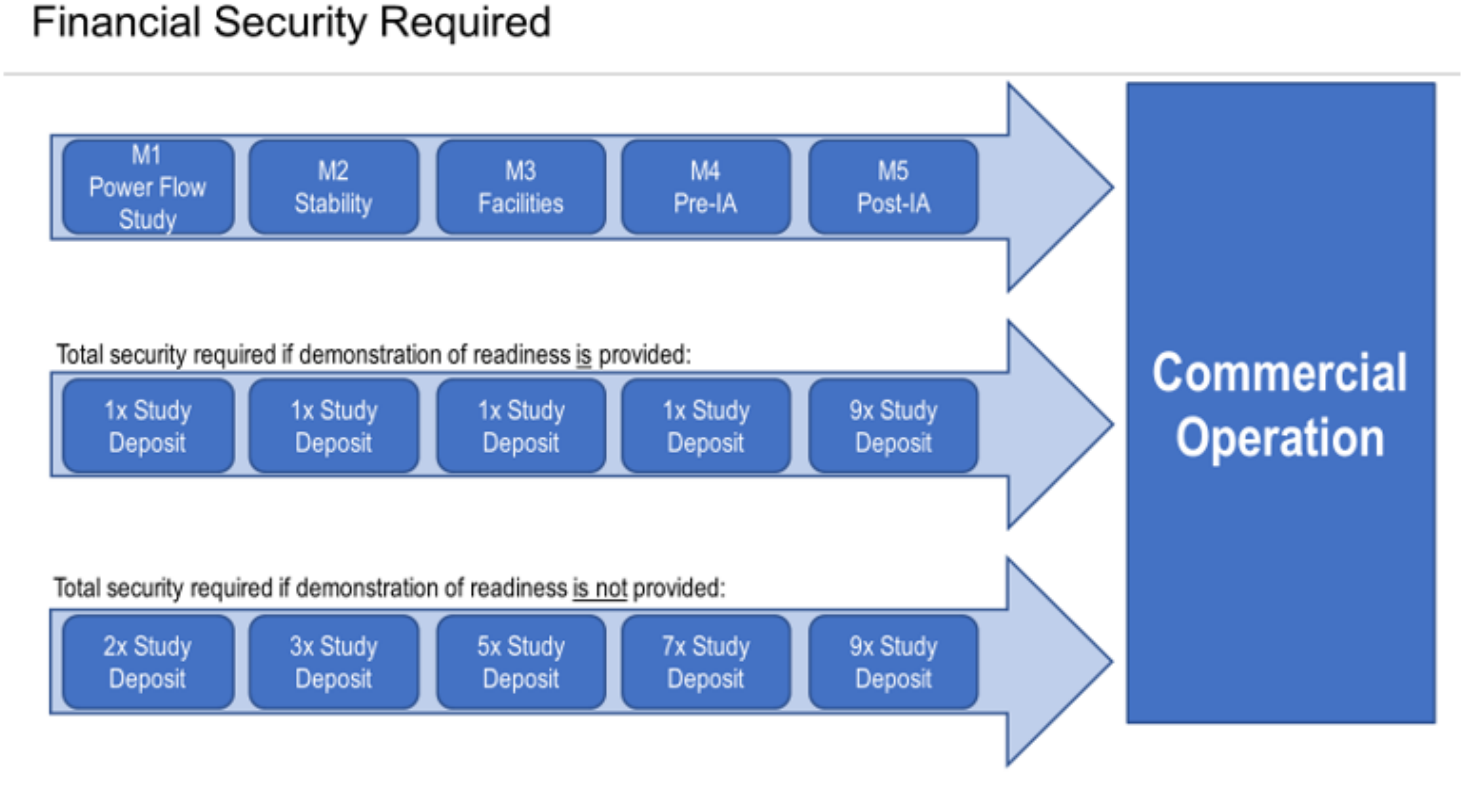

APPENDIX 6-3 TO LGIP
DEFINITIVE INTERCONNECTION SYSTEM IMPACT STUDY AGREEMENT
[Applicable to Section 10 Definitive Interconnection System Impact Study Process]

THIS AGREEMENT is made and entered into this_____ day of_____, 20___ by and between_____, a _____ organized and existing under the laws of the State of_____, ("Interconnection Customer,") and _____a _____existing under the laws of the State of _____, ("Transmission Provider"). Interconnection Customer and Transmission Provider each may be referred to as a "Party," or collectively as the "Parties."

RECITALS

WHEREAS, Interconnection Customer is proposing to develop a Large Generating Facility or generating capacity addition to an existing Generating Facility consistent with the Interconnection Request submitted by Interconnection Customer dated ; and

WHEREAS, Interconnection Customer desires to interconnect the Large Generating Facility with the Transmission System; and

WHEREAS, Interconnection Customer has requested Transmission Provider to perform a Definitive Interconnection System Impact Study to assess the impact of interconnecting the Large Generating Facility to the Transmission System, and of any Affected Systems; and

WHEREAS, Interconnection Customer commits to provide certain Readiness Milestones through the Definitive Interconnection Study process as described in Section 10.11 of the LGIP.

NOW, THEREFORE, in consideration of and subject to the mutual covenants contained herein the Parties agreed as follows:

1.0 When used in this Agreement, with initial capitalization, the terms specified shall have the meanings indicated in Transmission Provider's FERC-approved LGIP.

2.0 Interconnection Customer elects and Transmission Provider shall cause to be performed a Definitive Interconnection System Impact Study consistent with Sections 10.7 and 10.8 of this LGIP in accordance with the Tariff.

3.0 The scope of the Definitive Interconnection System Impact Study shall be subject to the assumptions set forth in Attachment A to this Agreement.

4.0 The Definitive Interconnection System Impact Study shall be based upon the technical information provided by Interconnection Customer in the Interconnection Request, subject to any modifications in accordance with Section 5.4 of the LGIP. Transmission Provider reserves the right to request additional technical information from Interconnection Customer as may reasonably become necessary consistent with Good Utility Practice during the course of the Definitive Interconnection System Impact Study. If Interconnection Customer modifies its designated Point of Interconnection, Interconnection Request, or the technical information provided therein is modified, the time to complete the Definitive Interconnection System Impact Study may be extended.

5.0 The Definitive Interconnection System Impact Study reports (Phase 1 Report or Phase 2 Report) shall provide the following information, as appropriate:

- identification of any circuit breaker short circuit capability limits exceeded as a result of the interconnection;

- identification of any thermal overload or voltage limit violations resulting from the interconnection;

- identification of any instability or inadequately damped response to system disturbances resulting from the interconnection; and

    - description and non-binding, good faith estimated cost of facilities required to interconnect the Large Generating Facility to the Transmission System and to address the identified short circuit, instability, and power flow issues.

6.0 Interconnection Customer shall comply with all Readiness Milestones and other requirements described in Section 10 of the LGIP for performance of the Definitive Interconnection System Impact Study. Interconnection Customer shall provide the deposit as specified in Section 4.1.2 of the LGIP for the performance of the Definitive Interconnection System Impact Study and the individual Interconnection Facilities Study as prescribed in Section 11. Transmission Provider's good faith estimate for the time of completion of the Definitive Interconnection System Impact Study (Phase 2) is [insert date].

Upon receipt of the Definitive Interconnection System Impact Study results or withdrawal of the Interconnection Request, Transmission Provider shall charge and Interconnection Customer shall pay the actual costs of the Definitive Interconnection System Impact Study, and the Withdrawal Penalty, as applicable, allocated according to Sections 4.7.1.1, 10.3, and the cost of the individual Interconnection Facilities Study as prescribed in Section 11.

Any difference between the study deposit and the actual cost of the study shall be paid by or refunded to Interconnection Customer, as appropriate, except as otherwise provided herein. As provided in Section 16.4 of the LGIP, Interconnection Customer has thirty (30) Calendar Days of receipt of an invoice from Transmission Provider to pay any undisputed costs. If invoices are not paid within thirty (30) Calendar Days of receipt of an invoice, Transmission Provider shall draw upon the security provided to settle all accounts, which shall include any offsets of amounts due and owing by Transmission Provider. After the final invoice is paid and all accounts are settled, Transmission Provider shall refund all remaining security.

7.0 Miscellaneous. The Definitive Interconnection System Impact Study Agreement shall include standard miscellaneous terms including, but not limited to, indemnities, representations, disclaimers, warranties, governing law, amendment, execution, waiver, enforceability and assignment, that reflect best practices in the electric industry, that are consistent with regional practices, Applicable Laws and Regulations and the organizational nature of each Party. All of these provisions, to the extent practicable, shall be consistent with the provisions of the LGIP and the LGIA.

IN WITNESS THEREOF, the Parties have caused this Agreement to be duly executed by their duly authorized officers or agents on the day and year first above written.

[Insert name of Transmission Provider or Transmission Owner, if applicable]

By: _____ By: _____

Title: _____ Title: _____

Date: _____ Date: _____

[Insert name of Interconnection Customer]

By: _____

Title: _____

Date: _____

ATTACHMENT A TO APPENDIX 6-3
DEFINITIVE INTERCONNECTION SYSTEM IMPACT STUDY AGREEMENT

ASSUMPTIONS USED IN CONDUCTING THE DEFINITIVE INTERCONNECTION SYSTEM IMPACT STUDY

The Definitive Interconnection System Impact Study shall be based upon the information set forth in the Interconnection Request(s) and results of applicable prior studies, subject to any modifications in accordance with Section 5.4 of the LGIP, and the following assumptions:

Designation of Point of Interconnection and configuration to be studied.

[Above assumptions to be completed by Interconnection Customer and other assumptions to be provided by Interconnection Customer and Transmission Provider]

APPENDIX 7 TO LGIP
INTERCONNECTION FACILITIES STUDY AGREEMENT
[Section 11 Facilities Study Process applicable to both Serial Interconnection Study Process and Definitive Interconnection Study Processes]

THIS AGREEMENT is made and entered into this___day of _____, 20___ by and between_____, a _____organized and existing under the laws of the State of _____, ("Interconnection Customer,") and _____, a existing under the laws of the State of _____, ("Transmission Provider "). Interconnection Customer and Transmission Provider each may be referred to as a "Party," or collectively as the "Parties."

RECITALS

WHEREAS, Interconnection Customer is proposing to develop a Large Generating Facility or generating capacity addition to an existing Generating Facility consistent with the Interconnection Request submitted by Interconnection Customer dated _____; and

WHEREAS, Interconnection Customer desires to interconnect the Large Generating Facility with the Transmission System;

WHEREAS, Transmission Provider has completed either the Serial Interconnection System Impact Study (the "System Impact Study") or the Definitive Interconnection System Impact Study and provided the results of said study to Interconnection Customer; and

WHEREAS, Interconnection Customer has requested Transmission Provider to perform an Interconnection Facilities Study to specify and estimate the cost of the equipment, engineering, procurement and construction work needed to implement the conclusions of either the Serial Interconnection System Impact Study or the Definitive Interconnection System Impact Study in accordance with Good Utility Practice to physically and electrically connect the Large Generating Facility to the Transmission System.

NOW, THEREFORE, in consideration of and subject to the mutual covenants contained herein the Parties agreed as follows:

1.0 When used in this Agreement, with initial capitalization, the terms specified shall have the meanings indicated in Transmission Provider's FERC-approved LGIP.

2.0 Interconnection Customer elects and Transmission Provider shall cause an Interconnection Facilities Study consistent with Section 11 of this LGIP to be performed in accordance with the Tariff.

3.0 The scope of the Interconnection Facilities Study shall be subject to the assumptions set forth in Attachment A and the data provided in Attachment B to this Agreement.

4.0 The Interconnection Facilities Study report (i) shall provide a description, estimated cost of (consistent with Attachment A), schedule for required facilities to interconnect the Large Generating Facility to the Transmission System and (ii) shall address the short circuit, instability, and power flow issues identified in either the Serial Interconnection System

Impact Study or the Definitive Interconnection System Impact Study completed by the Transmission Provider.

5.0 For the Serial Interconnection Study Process, the Interconnection Customer shall provide a deposit of $100,000 for the performance of the Interconnection Facilities Study. Transmission Provider shall invoice Interconnection Customer on a monthly basis for the work to be conducted on the Interconnection Facilities Study each month. Interconnection Customer shall pay invoiced amounts within thirty (30) Calendar Days of receipt of invoice. Transmission Provider shall continue to hold the amounts on deposit until settlement of the final invoice.

For the Definitive Interconnection Study Process, Interconnection Customer shall meet the requirements specified under Section 11.2 of the LGIP prior to the performance of the Interconnection Facilities Study.

6.0 The Transmission Provider shall use Reasonable Efforts to complete the study and issue a draft Interconnection Facilities Study report to Interconnection Customer within ninety (90) Calendar Days from receipt of executed Interconnection Facilities Study Agreement where Transmission Provider is administering a Serial Interconnection Study Process, or within one hundred fifty (150) Calendar Days where Transmission Provider is administering a Definitive Interconnection Study Process. .

7.0 This section only applies to the Definitive Interconnection Study Process. Interconnection Customer shall have provided the deposit as specified in Section 4.1.2 of the LGIP for the performance of the Definitive Interconnection System Impact Study and the Interconnection Facilities Study.

Upon receipt of the Interconnection Facilities Study results, Transmission Provider shall charge and Interconnection Customer shall pay the actual costs of the Definitive Interconnection System Impact Study which includes costs allocated according to Section 10.3 of the LGIP, the cost of the individual Interconnection Facilities Study, and the withdraw penalty calculated pursuant to Section 4.7.1.1, if applicable.

Any difference between the study deposit and the actual cost of the study shall be paid by or refunded to Interconnection Customer, as appropriate, except as otherwise provided herein. As provided in Section 16.3 of the LGIP, Interconnection Customer has thirty (30) Calendar Days of receipt of an invoice from Transmission Provider to pay any undisputed costs. If invoices are not paid within thirty (30) Calendar Days of receipt of an invoice, Transmission Provider shall draw upon the security provided to settle all accounts, which shall include any offsets of amounts due and owing by Transmission Provider. After the final invoice is paid and all accounts are settled, Transmission Provider shall refund all remaining security.

8.0 Miscellaneous. The Interconnection Facility Study Agreement shall include standard miscellaneous terms including, but not limited to, indemnities, representations, disclaimers, warranties, governing law, amendment, execution, waiver, enforceability and assignment, that reflect best practices in the electric industry, and that are consistent with regional practices, Applicable Laws and Regulations, and the organizational nature of each Party. All of these provisions, to the extent practicable, shall be consistent with the provisions of the LGIP and the LGIA.

IN WITNESS WHEREOF, the Parties have caused this Agreement to be duly executed by their duly authorized officers or agents on the day and year first above written.

[Insert name of Transmission Provider or Transmission Owner, if applicable]

By: _____ By: _____

Title: _____ Title: _____

Date: _____ Date: _____

[Insert name of Interconnection Customer]

By: _____

Title: _____

Date: _____

Attachment A to Appendix 7
Interconnection Facilities
Study Agreement

INTERCONNECTION CUSTOMER SCHEDULE ELECTION FOR CONDUCTING THE INTERCONNECTION FACILITIES STUDY
[Only applicable to Serial Interconnection Study Process]

Transmission Provider shall use Reasonable Efforts to complete the study and issue a draft Interconnection Facilities Study report to Interconnection Customer within the following number of days after of receipt of an executed copy of this Interconnection Facilities Study Agreement:

- ninety (90) Calendar Days with no more than a +/- 20 percent cost estimate contained in the report, or

- one hundred eighty (180) Calendar Days with no more than a +/- 10 percent cost estimate contained in the report.

Attachment B to Appendix 7
Interconnection Facilities
Study Agreement

DATA FORM TO BE PROVIDED BY INTERCONNECTION CUSTOMER WITH THE INTERCONNECTION FACILITIES STUDY AGREEMENT

Provide location plan and simplified one-line diagram of the plant and station facilities. For staged projects, please indicate future generation, transmission circuits, etc.

One set of metering is required for each generation connection to the new ring bus or existing Transmission Provider station. Number of generation connections:

On the one line diagram indicate the generation capacity attached at each metering location. (Maximum load on CT/PT)

On the one line diagram indicate the location of auxiliary power. (Minimum load on CT/PT) Amps

Will an alternate source of auxiliary power be available during CT/PT maintenance?
_____Yes _____ No

Will a transfer bus on the generation side of the metering require that each meter set be designed for the total plant generation? _____Yes _____No (Please indicate on one line diagram).

What type of control system or PLC will be located at Interconnection Customer's Large Generating Facility?

_____

What protocol does the control system or PLC use?

_____

Please provide a 7.5-minute quadrangle of the site. Sketch the plant, station, transmission line, and property line.

Physical dimensions of the proposed interconnection station:

_____

Bus length from generation to interconnection station:

_____

Line length from interconnection station to Transmission Provider's transmission line.

_____

Tower number observed in the field. (Painted on tower leg)* _____

Number of third party easements required for transmission lines*:

_____

* To be completed in coordination with Transmission Provider.

Is the Large Generating Facility in the Transmission Provider's service area?

_____Yes _____No Local provider: _____

Please provide proposed schedule dates:

Begin Construction	Date: _____
Generator step-up transformer receives back feed power	Date: _____
Generation Testing	Date: _____
Commercial Operation	Date: _____

APPENDIX 8-1 TO LGIP
Transitional Serial Interconnection Facilities Study Agreement
[Applicable to Section 7.1 Transitional Serial Process]

THIS AGREEMENT is made and entered into this_____ day of_____, 20___ by and between_____, a _____ organized and existing under the laws of the State of_____, ("Interconnection Customer,") and _____a _____existing under the laws of the State of _____, ("Transmission Provider"). Interconnection Customer and Transmission Provider each may be referred to as a "Party," or collectively as the "Parties."

RECITALS

WHEREAS, Interconnection Customer is proposing to develop a Large Generating Facility or generating capacity addition to an existing Generating Facility consistent with the Interconnection Request submitted by Interconnection Customer dated ; and

WHEREAS, Interconnection Customer desires to interconnect the Large Generating Facility with the Transmission System; and

WHEREAS, Interconnection Customer has requested Transmission Provider to continue processing its Interconnection Facilities Study to specify and estimate the cost of the equipment, engineering, procurement and construction work needed to implement the conclusions of the System Impact Study in accordance with Good Utility Practice to physically and electrically connect the Large Generating Facility to the Transmission System; and

WHEREAS, Transmission Provider has completed a System Impact Study and Interconnection Customer has executed and Transmission Provider has accepted an Interconnection Facilities Study Agreement; and

WHEREAS, Interconnection Customer has provided certain requirements described in Section 7.1 of the LGIP including a deposit on Transmission provider's Interconnection Facilities and Network Upgrades.

NOW, THEREFORE, in consideration of and subject to the mutual covenants contained herein the Parties agreed as follows:

1.0 When used in this Agreement, with initial capitalization, the terms specified shall have the meanings indicated in Transmission Provider's FERC-approved LGIP.

2.0 Interconnection Customer elects and Transmission Provider shall cause to be performed an Interconnection Facilities Study consistent with Sections 11 of this LGIP in accordance with the Tariff.

3.0 The scope of the Interconnection Facilities Study shall be subject to the assumptions set forth in Attachment A to this Agreement which shall be the same assumptions as the previous Interconnection Facilities Study Agreement.

4.0 The Interconnection Facilities Study report (i) shall provide a description, estimated cost of (consistent with Attachment A), schedule for required facilities to interconnect the Large Generating Facility to the Transmission System and (ii) shall address the short circuit,

instability, and power flow issues identified in the most recently published System Impact Study.

5.0 Interconnection Customer has met the requirements described in Section 7.1 of the LGIP. The time for completion of the Interconnection Facilities Study is specified in Attachment A.

6.0 Upon receipt of the Interconnection Facilities Study results, Transmission Provider shall charge and Interconnection Customer shall pay the actual costs of the Interconnection Facilities Study.

Any difference between the study deposit and the actual cost of the study shall be paid by or refunded to Interconnection Customer, as appropriate.

7.0 Miscellaneous. The Interconnection Facilities Study Agreement shall include standard miscellaneous terms including, but not limited to, indemnities, representations, disclaimers, warranties, governing law, amendment, execution, waiver, enforceability and assignment, that reflect best practices in the electric industry, and that are consistent with regional practices, Applicable Laws and Regulations, and the organizational nature of each Party. All of these provisions, to the extent practicable, shall be consistent with the provisions of the LGIP and the LGIA.

IN WITNESS WHEREOF, the Parties have caused this Agreement to be duly executed by their duly authorized officers or agents on the day and year first above written.

[Insert name of Transmission Provider or Transmission Owner, if applicable]
By: _____ By: _____

Title: _____ Title: _____
Date: _____ Date: _____

[Insert name of Interconnection Customer]
By: _____

Title: _____
Date: _____

ATTACHMENT A TO APPENDIX 8-1
TRANSITIONAL SERIAL INTERCONNECTION FACILITIES STUDY

ASSUMPTIONS USED IN CONDUCTING THE
TRANSITIONAL SERIAL INTERCONNECTION FACILITIES STUDY

[Assumptions to be completed by Interconnection Customer and Transmission Provider]

APPENDIX 8-2 to the LGIP
TRANSITIONAL CLUSTER STUDY AGREEMENT
[Applicable to Section 7.2 Transitional Cluster Process]

THIS AGREEMENT is made and entered into this_____ day of_____, 20___ by and between_____, a _____ organized and existing under the laws of the State of_____, ("Interconnection Customer,") and _____a _____existing under the laws of the State of _____, ("Transmission Provider"). Interconnection Customer and Transmission Provider each may be referred to as a "Party," or collectively as the "Parties."

RECITALS

WHEREAS, Interconnection Customer is proposing to develop a Large Generating Facility or generating capacity addition to an existing Generating Facility consistent with the Interconnection Request submitted by Interconnection Customer dated _____; and

WHEREAS, Interconnection Customer desires to interconnect the Generating Facility with the Transmission Provider's Transmission System or Distribution System pursuant to Transmission Provider's most recently approved Large Generator Interconnection Procedures ("the LGIP") ; and

WHEREAS, Interconnection Customer has requested Transmission Provider to perform such a Transitional Cluster Study as described in Section 7.2 of this LGIP, which is a Definitive Interconnection System Impact Study to specify and estimate the cost of the equipment, engineering, procurement and construction work needed to physically and electrically connect the Generating Facility as well as other proposed Generating Facilities that established Queue Numbers prior to the Commission's authorization for the Transmission Provider to transition to a Definitive Interconnection Study Process and the Cluster Study transition notice date established in Section 7.

WHEREAS, Interconnection Customer Interconnection Customer has met all requirements described in Section 7.2 of the LGIP within the 60 Calendar Day timeframe prescribed by Section 7 to enter into the Transitional Cluster Study; and

WHEREAS, the Commission has authorized the Transmission Provider to transition to a Definitive Interconnection Study Process and Interconnection Customer has a valid Queue Number as of the Cluster Study transition notice date described in Section 7 of the LGIP, and

NOW, THEREFORE, in consideration of and subject to the mutual covenants contained herein the Parties agreed as follows:

1.0 When used in this Agreement, with initial capitalization, the terms specified shall have the meanings indicated in Transmission Provider's FERC-approved LGIP. References to "Sections" shall be specified Sections of the LGIP.

2.0 Interconnection Customer elects and the Transmission Provider shall cause to be performed a Transitional Cluster Study as described in Section 7.2 of the LGIP. By execution of this Agreement, Interconnection Customer and Transmission Provider agree to rescind any previously executed System Impact Study Agreement and to complete the Transitional Cluster Study pursuant to this Agreement.

3.0 The Transitional Cluster Study shall be based upon the technical information provided by Interconnection Customer in the Interconnection Request. The Transmission Provider reserves the right to request additional technical information from Interconnection Customer as may reasonably become necessary consistent with Good Utility Practice during the course of the Transitional Cluster Study and Interconnection Customer shall provide such data.

4.0 The Transitional Cluster Study report shall provide the following information:

- identification of any circuit breaker short circuit capability limits exceeded as a result of the interconnection;

- identification of any thermal overload or voltage limit violations resulting from the interconnection;

- identification of any instability or inadequately damped response to system disturbances resulting from the interconnection, and

- shall provide a description, estimated cost of, schedule for required facilities to interconnect the Large Generating Facility to the Transmission System and shall address the short circuit, instability, and power flow issues identified in the most recently published System Impact Study.

5.0 Interconnection Customer has met all requirements described in Section 7.2.1 within the timeframe prescribed by Section 7 to enter into the Transitional Cluster Study.

6.0 In addition to meeting all requirements of Section 7.2.1 to enter and proceed through the Transitional Cluster Study, Interconnection Customer shall have previously provided a deposit for the performance of Interconnection Studies at the time of its Interconnection Request. Interconnection Customer's initial deposit shall be applied towards the Transmission Provider's cost of completing the Transitional Cluster Study, and shall be supplemented, if required, pursuant to Section 7.2(c.).

The Interconnection Customer shall be allocated the actual costs of the Transitional Cluster Study according to the method described in Section 10.3. If the Interconnection Customer withdraws the Interconnection Request at any time after Phase 2 commences, the Interconnection Customer shall be subject to the Withdrawal Penalty identified in Section 7.2.6 and the collected amount shall be distributed to fund re-studies of the Transitional Cluster Study or future Cluster Study costs pursuant to Section 4.7.1.2, unless the Transmission Provider determines consistent with Good Utility Practice that a Withdrawal Penalty should not be assigned pursuant to Section 4.7.1. If the Interconnection Customer withdraws or otherwise does not reach Commercial Operation, any deposit(s) or security required by Section 7.2 are fully refundable once the final invoice for study costs and Withdrawal Penalty is settled.

7.0 Miscellaneous. The Transitional Cluster Study Agreement shall include standard miscellaneous terms including, but not limited to, indemnities, representations, disclaimers, warranties, governing law, amendment, execution, waiver, enforceability and assignment, that reflect best practices in the electric industry, that are consistent with regional practices, Applicable Laws and Regulations and the organizational nature of each Party. All of these provisions, to the extent practicable, shall be consistent with the provisions of the LGIP and the LGIA. Interconnections Customers proceeding

through the Transitional Cluster Study process shall separately execute a Facilities Study Agreement, as provided for in Section 7.2.4

IN WITNESS WHEREOF, the Parties have caused this Agreement to be duly executed by their duly authorized officers or agents on the day and year first above written.

[Insert name of Transmission Provider or Transmission Owner, if applicable]

By: _____ By: _____

Title: _____ Title: _____

Date: _____ Date: _____

[Insert name of Interconnection Customer]

By: _____

Title: _____

Date: _____

ATTACHMENT A TO APPENDIX 8-2
Transitional Cluster Study Agreement

ASSUMPTIONS USED IN CONDUCTING THE TRANSITIONAL CLUSTER STUDY

[Assumptions to be completed by Interconnection Customer and Transmission Provider]

APPENDIX 9 TO LGIP
OPTIONAL INTERCONNECTION STUDY AGREEMENT
[Applicable to Section 13 Optional Study Process, applicable only to Serial Interconnection Study Process]

THIS AGREEMENT is made and entered into this___ day of _____, 20___ by and between_____, a _____ organized and existing under the laws of the State of _____, ("Interconnection Customer,") and _____ a_____ _____ existing under the laws of the State of _____, ("Transmission Provider"). Interconnection Customer and Transmission Provider each may be referred to as a "Party," or collectively as the "Parties."

RECITALS

WHEREAS, Interconnection Customer is proposing to develop a Large Generating Facility or generating capacity addition to an existing Generating Facility consistent with the Interconnection Request submitted by Interconnection Customer dated _____;

WHEREAS, Interconnection Customer is proposing to establish an interconnection with the Transmission System; and

WHEREAS, Interconnection Customer has submitted to Transmission Provider an Interconnection Request; and

WHEREAS, on or after the date when Interconnection Customer receives Serial Interconnection System Impact Study results, Interconnection Customer has further requested that Transmission Provider prepare an Optional Interconnection Study;

NOW, THEREFORE, in consideration of and subject to the mutual covenants contained herein the Parties agree as follows:

1.0 When used in this Agreement, with initial capitalization, the terms specified shall have the meanings indicated in Transmission Provider's FERC-approved LGIP.

2.0 Interconnection Customer elects and Transmission Provider shall cause an Optional Interconnection Study consistent with Section 13 of this LGIP to be performed in accordance with the Tariff.

3.0 The scope of the Optional Interconnection Study shall be subject to the assumptions set forth in Attachment A to this Agreement.

4.0 The Optional Interconnection Study shall be performed solely for informational purposes.

5.0 The Optional Interconnection Study report shall provide a sensitivity analysis based on the assumptions specified by Interconnection Customer in Attachment A to this Agreement. The Optional Interconnection Study will identify Transmission Provider's Interconnection Facilities and the Network Upgrades, and the estimated cost thereof, that may be required to

provide transmission service or interconnection service based upon the assumptions specified by Interconnection Customer in Attachment A.

6.0 Interconnection Customer shall provide a deposit of $10,000 for the performance of the Optional Interconnection Study. Transmission Provider's good faith estimate for the time of completion of the Optional Interconnection Study is [insert date].

Upon receipt of the Optional Interconnection Study, Transmission Provider shall charge and Interconnection Customer shall pay the actual costs of the Optional Study.

Any difference between the initial payment and the actual cost of the study shall be paid by or refunded to Interconnection Customer, as appropriate.

7.0 Miscellaneous. The Optional Interconnection Study Agreement shall include standard miscellaneous terms including, but not limited to, indemnities, representations, disclaimers, warranties, governing law, amendment, execution, waiver, enforceability and assignment, that reflect best practices in the electric industry, and that are consistent with regional practices, Applicable Laws and Regulations, and the organizational nature of each Party. All of these provisions, to the extent practicable, shall be consistent with the provisions of the LGIP and the LGIA.

IN WITNESS WHEREOF, the Parties have caused this Agreement to be duly executed by their duly authorized officers or agents on the day and year first above written.

[Insert name of Transmission Provider or Transmission Owner, if applicable]

By: _____ By: _____

Title: _____ Title: _____

Date: _____ Date: _____

[Insert name of Interconnection Customer]

By: _____

Title: _____

Date: _____

Appendix 10 to the Standard Large Generator Interconnection Procedures

STANDARD LARGE GENERATOR INTERCONNECTION AGREEMENT (LGIA) (DEC Zone and DEP Zone)

TABLE OF CONTENTS

RECITALS

ARTICLE 1. DEFINITIONS .....

ARTICLE 2. EFFECTIVE DATE, TERM, AND TERMINATION .....

2.1 Effective Date .....

2.2 Term of Agreement .....

2.3 Termination Procedures .....

2.3.1 Written Notice .....

2.3.2 Default .....

2.4 Termination Costs .....

2.5 Disconnection .....

2.6 Survival .....

ARTICLE 3. REGULATORY FILINGS .....

3.1 Filing .....

ARTICLE 4. SCOPE OF SERVICE .....

4.1 Interconnection Product Options .....

4.1.1 Energy Resource Interconnection Service .....

4.1.1.1 The Product .....

4.1.1.2 Transmission Delivery Service Implications .....

4.1.2 Network Resource Interconnection Service .....

4.1.2.1 The Product .....

4.1.2.2 Transmission Delivery Service Implications .....

4.2 Provision of Service .....

4.3 Performance Standards .....

4.4 No Transmission Delivery Service .....

4.5 Interconnection Customer Provided Services .....

ARTICLE 5. INTERCONNECTION FACILITIES ENGINEERING, PROCUREMENT, & CONSTRUCTION .....

5.1 Options
5.1.1 Standard Option.
5.1.2 Alternate Option
5.1.3 Option to Build
5.1.4 Negotiated Option
5.2 General Conditions Applicable to Option to Build
5.3 Liquidated Damages
5.4 Power System Stabilizers
5.5 Equipment Procurement
5.6 Construction Commencement
5.7 Work Progress
5.8 Information Exchange
5.9 Other Interconnection Options
5.9.1 Limited Operation
5.9.2 Provisional Interconnection Service
5.10 Interconnection Customer's Interconnection Facilities ("ICIF")
5.10.1 Interconnection Customer's Interconnection Facility Specifications
5.10.2 Transmission Provider's Review
5.10.3 ICIF Construction
5.11 Transmission Provider's Interconnection Facilities Construction
5.12 Access Rights
5.13 Lands of Other Property Owners
5.14 Permits
5.15 Early Construction of Base Case Facilities
5.16 Suspension
5.17 Taxes
5.17.1 Interconnection Customer Payments Not Taxable
5.17.2 Representations and Covenants
5.17.3 Indemnification for the Cost Consequences of Current Tax Liability Imposed Upon the Transmission Provider
5.17.4 Tax Gross-Up Amount
5.17.5 Private Letter Ruling or Change or Clarification of Law
5.17.6 Subsequent Taxable Events

5.17.7 Contests
5.17.8 Refund
5.17.9 Taxes Other Than Income Taxes
5.17.10 Transmission Owners Who Are Not Transmission Providers
5.18 Tax Status
5.19 Modification
5.19.1 General
5.19.2 Standards
5.19.3 Modification Costs
ARTICLE 6. TESTING AND INSPECTION
6.1 Pre-Commercial Operation Date Testing and Modifications
6.2 Post-Commercial Operation Date Testing and Modifications
6.3 Right to Observe Testing
6.4 Right to Inspect
ARTICLE 7. METERING
7.1 General
7.2 Check Meters
7.3 Standards
7.4 Testing of Metering Equipment
7.5 Metering Data
ARTICLE 8 COMMUNICATIONS
8.1 Interconnection Customer Obligations
8.2 Remote Terminal Unit
8.3 No Annexation
8.4 Provision of Data from a Variable Energy Resource
ARTICLE 9. OPERATIONS
9.1 GENERAL
9.2 CONTROL AREA NOTIFICATION
9.3 TRANSMISSION PROVIDER OBLIGATIONS
9.4 INTERCONNECTION CUSTOMER OBLIGATIONS
9.5 START-UP AND SYNCHRONIZATION
9.6 REACTIVE POWER AND PRIMARY FREQUENCY RESPONSE
9.6.1 Power Factor Design Criteria

9.6.1.1 Synchronous Generation
9.6.1.2 Non-Synchronous Generation
9.6.2 Voltage Schedules
9.6.2.1 Voltage Regulators
9.6.3 Payment for Reactive Power
9.6.4 Primary Frequency Response
9.6.4.1 Governor or Equivalent Controls
9.6.4.2 Timely and Sustained Response
9.6.4.3 Exemptions
9.6.4.4 Electric Storage Resources
9.7 Outages and Interruptions
9.7.1 Outages
9.7.1.1 Outage Authority and Coordination
9.7.1.2 Outage Schedules
9.7.1.3 Outage Restoration
9.7.2 Interruption of Service
9.7.3 Under-Frequency and Over Frequency Conditions
9.7.4 System Protection and Other Control Requirements
9.7.4.1 System Protection Facilities
9.7.5 Requirements for Protection
9.7.6 Power Quality
9.8 Switching and Tagging Rules
9.9 Use of Interconnection Facilities by Third Parties
9.9.1 Purpose of Interconnection Facilities
9.9.2 Third Party Users
9.10 Disturbance Analysis Data Exchange
ARTICLE 10. MAINTENANCE
10.1 Transmission Provider Obligations
10.2 Interconnection Customer Obligations
10.3 Coordination
10.4 Secondary Systems
10.5 Operating and Maintenance Expenses
ARTICLE 11. PERFORMANCE OBLIGATION

11.1 Interconnection Customer Interconnection Facilities .....
11.2 Transmission Provider's Interconnection Facilities .....
11.3 Network Upgrades and Distribution Upgrades .....
11.4 Transmission Credits .....
11.4.1 Repayment of Amounts Advanced for Network Upgrades .....
11.4.2 Special Provision for Affected Systems .....
11.5 Provision of Security .....
11.6 Interconnection Customer Compensation .....
11.6.1 Interconnection Customer Compensation for Actions During Emergency Condition .....
ARTICLE 12. INVOICE .....
12.1 General .....
12.2 Final Invoice .....
12.3 Payment .....
12.4 Disputes .....
ARTICLE 13. EMERGENCIES .....
13.1 Definition .....
13.2 Obligations .....
13.3 Notice .....
13.4 Immediate Action .....
13.5 Transmission Provider Authority .....
13.5.1 General .....
13.5.2 Reduction and Disconnection .....
13.6 Interconnection Customer Authority .....
13.7 Limited Liability .....
ARTICLE 14. REGULATORY REQUIREMENTS AND GOVERNING LAW .....
14.1 Regulatory Requirements .....
14.2 Governing Law .....
ARTICLE 15. NOTICES .....
15.1 General .....
15.2 Billings and Payments .....
15.3 Alternative Forms of Notice .....
15.4 Operations and Maintenance Notice .....

ARTICLE 16. FORCE MAJEURE
ARTICLE 17. DEFAULT
17.1 Default
17.1.1 General
17.1.2 Right to Terminate
ARTICLE 18. INDEMNITY, CONSEQUENTIAL DAMAGES AND INSURANCE
18.1 Indemnity
18.1.1 Indemnified Person
18.1.2 Indemnifying Party
18.1.3 Indemnity Procedures
18.2 Consequential Damages
18.3 Insurance
ARTICLE 19. ASSIGNMENT
ARTICLE 20. SEVERABILITY
ARTICLE 21. COMPARABILITY
ARTICLE 22. CONFIDENTIALITY
22.1 Confidentiality
22.1.1 Term
22.1.2 Scope
22.1.3 Release of Confidential Information
22.1.4 Rights
22.1.5 No Warranties
22.1.6 Standard of Care
22.1.7 Order of Disclosure
22.1.8 Termination of Agreement
22.1.9 Remedies
22.1.10 Disclosure to FERC, its Staff, or a State
ARTICLE 23. ENVIRONMENTAL RELEASES
ARTICLE 24. INFORMATION REQUIREMENTS
24.1 Information Acquisition
24.2 Information Submission by Transmission Provider
24.3 Updated Information Submission by Interconnection Customer
24.4 Information Supplementation

ARTICLE 25. INFORMATION ACCESS AND AUDIT RIGHTS .....
25.1 Information Access .....
25.2 Reporting of Non-Force Majeure Events .....
25.3 Audit Rights .....
25.4 Audit Rights Periods .....
25.4.1 Audit Rights Period for Construction-Related Accounts and Records .....
25.4.2 Audit Rights Period for All Other Accounts and Records .....
25.5 Audit Results .....
ARTICLE 26. SUBCONTRACTORS .....
26.1 General .....
26.2 Responsibility of Principal .....
26.3 No Limitation by Insurance .....
ARTICLE 27. DISPUTES .....
27.1 Submission .....
27.2 External Arbitration Procedures .....
27.3 Arbitration Decisions .....
27.4 Costs .....
ARTICLE 28. REPRESENTATIONS, WARRANTIES, AND COVENANTS .....
28.1 General .....
28.1.1 Good Standing .....
28.1.2 Authority .....
28.1.3 No Conflict .....
28.1.4 Consent and Approval .....
ARTICLE 29. JOINT OPERATING COMMITTEE .....
ARTICLE 30. MISCELLANEOUS .....
30.1 Binding Effect .....
30.2 Conflicts .....
30.3 Rules of Interpretation .....
30.4 Entire Agreement .....
30.5 No Third Party Beneficiaries .....
30.6 Waiver .....
30.7 Headings .....

30.8 Multiple Counterparts .....
30.9 Amendment .....
30.10 Modification by the Parties .....
30.11 Reservation of Rights .....
30.12 No Partnership .....

STANDARD LARGE GENERATOR INTERCONNECTION AGREEMENT

THIS STANDARD LARGE GENERATOR INTERCONNECTION AGREEMENT ("Agreement" or "LGIA") is made and entered into this ____ day of _____ 20__, by and between _____, a _____ organized and existing under the laws of the State/Commonwealth of _____ ("Interconnection Customer" with a Large Generating Facility), and _____, a _____ organized and existing under the laws of the State/Commonwealth of _____ ("Transmission Provider and/or Transmission Owner"). Interconnection Customer and Transmission Provider each may be referred to as a "Party" or collectively as the "Parties."

Recitals

WHEREAS, Transmission Provider operates the Transmission System; and

WHEREAS, Interconnection Customer intends to own, lease and/or control and operate the Generating Facility identified as a Large Generating Facility in Appendix C to this Agreement; and,

WHEREAS, Interconnection Customer and Transmission Provider have agreed to enter into this Agreement for the purpose of interconnecting the Large Generating Facility with the Transmission System;

[If Interconnection Customer and Transmission Provider are one and the same: **WHEREAS,** Interconnection Customer and Transmission Provider are one and the same, and therefore the provisions set forth in Articles 5.17.4, 11.4.1 and 11.5 of this Agreement shall not apply;]

NOW, THEREFORE, in consideration of and subject to the mutual covenants contained herein, it is agreed:

When used in this Standard Large Generator Interconnection Agreement, terms with initial capitalization that are not defined in Article 1 shall have the meanings specified in the Article in which they are used or the Open Access Transmission Tariff (Tariff).

Article 1. Definitions

Adverse System Impact shall mean the negative effects due to technical or operational limits on conductors or equipment being exceeded that may compromise the safety and reliability of the electric system.

Affected System shall mean an electric system other than the Transmission Provider's Transmission System that may be affected by the proposed interconnection.

Affected System Operator shall mean the entity that operates an Affected System.

Affiliate shall mean, with respect to a corporation, partnership or other entity, each such other corporation, partnership or other entity that directly or indirectly, through one or more intermediaries, controls, is controlled by, or is under common control with, such corporation, partnership or other entity.

Ancillary Services shall mean those services that are necessary to support the transmission of capacity and energy from resources to loads while maintaining reliable operation of the Transmission Provider's Transmission System in accordance with Good Utility Practice.

Applicable Laws and Regulations shall mean all duly promulgated applicable federal, state and local laws, regulations, rules, ordinances, codes, decrees, judgments, directives, or judicial or administrative orders, permits and other duly authorized actions of any Governmental Authority.

Applicable Reliability Council shall mean the reliability council applicable to the Transmission System to which the Generating Facility is directly interconnected.

Applicable Reliability Standards shall mean the requirements and guidelines of NERC, the Applicable Reliability Council, and the Control Area of the Transmission System to which the Generating Facility is directly interconnected.

Base Case shall mean the base case power flow, short circuit, and stability data bases used for the Interconnection Studies by the Transmission Provider or Interconnection Customer.

Breach shall mean the failure of a Party to perform or observe any material term or condition of the Standard Large Generator Interconnection Agreement.

Breaching Party shall mean a Party that is in Breach of the Standard Large Generator Interconnection Agreement.

Business Day shall mean Monday through Friday, excluding Federal Holidays.

Calendar Day shall mean any day including Saturday, Sunday or a Federal Holiday.

Cluster shall mean a group of Interconnection Requests (one or more) that are studied together for the purpose of conducting Interconnection Studies.

Cluster Study shall mean an Interconnection Study evaluating one or more Interconnection Requests.

Clustering shall mean the process whereby a group of Interconnection Requests is studied together, instead of serially, for the purpose of conducting the Interconnection Studies.

Commercial Operation shall mean the status of a Generating Facility, or Replacement Generating Facility, that has commenced generating electricity for sale, excluding electricity generated during Trial Operation.

Commercial Operation Date of a unit shall mean the date on which the Generating Facility, or Replacement Generating Facility, commences Commercial Operation as agreed to by the Parties pursuant to Appendix E to the Standard Large Generator Interconnection Agreement.

Confidential Information shall mean any confidential, proprietary or trade secret information of a plan, specification, pattern, procedure, design, device, list, concept, policy or compilation relating to the present or planned business of a Party, which is designated as confidential by the Party supplying the information, whether conveyed orally, electronically, in writing, through inspection, or otherwise.

Contingent Facilities shall mean those unbuilt Interconnection Facilities and Network Upgrades upon which the Interconnection Request's costs, timing, and study findings are dependent, and if delayed or not built, could cause a need for Re-Studies of the Interconnection Request or a reassessment of the Interconnection Facilities and/or Network Upgrades and/or costs and timing.

Control Area shall mean an electrical system or systems bounded by interconnection metering and telemetry, capable of controlling generation to maintain its interchange schedule with other Control Areas and contributing to frequency regulation of the interconnection. A Control Area must be certified by the Applicable NERC Regional Reliability Entity. Control Area shall have the same meaning as Balancing Authority Area as defined by NERC.

Customer Engagement Window shall have the meaning set forth in Section 10.1 of the LGIP.

Default shall mean the failure of a Breaching Party to cure its Breach in accordance with Article 17 of the Standard Large Generator Interconnection Agreement.

Definitive Interconnection Study Process ("Definitive Interconnection Study") shall mean an interconnection study process adopted at Transmission Provider's option for purposes of administering a Cluster Study Process inclusive of the Informational Interconnection Study Process, the Transitional Serial Study Process, the Transitional Cluster Study Process, the DISIS Request Window, Customer Engagement Window, and the Definitive Interconnection System Impact Study. Both the Resource Solicitation Cluster and the DISIS Cluster are processed under the Definitive Interconnection Study.

Definitive Interconnection System Impact Study ("DISIS") shall mean an engineering study that evaluates the impact of a Cluster of Interconnection Requests on the safety and reliability of the Transmission System and, if applicable, an Affected System.

Definitive Interconnection System Impact Study Agreement ("DISIS Agreement") shall mean the form of agreement contained in Appendix 6-3 of the LGIP for conducting the Definitive Interconnection System Impact Study.

Definitive Interconnection System Impact Study Cluster ("DISIS Cluster") shall mean an engineering study that evaluates the impact the proposed interconnection (s) on the safety and reliability of Transmission System and, if applicable, an Affected System.

DISIS Request Window shall have the meaning set forth in Section 10.1 of the LGIP.

Dispute Resolution shall mean the procedure for resolution of a dispute between the Parties in which they will first attempt to resolve the dispute on an informal basis.

Distribution System shall mean the Transmission Provider's facilities and equipment used to transmit electricity to ultimate usage points such as homes and industries directly from nearby generators or from interchanges with higher voltage transmission networks which transport bulk power over longer distances. The voltage levels at which distribution systems operate differ among areas.

Distribution Upgrades shall mean the additions, modifications, and upgrades to the Transmission Provider's Distribution System at or beyond the Point of Interconnection to facilitate interconnection of the Generating Facility and render the transmission service necessary to effect Interconnection Customer's wholesale sale of electricity in interstate commerce. Distribution Upgrades do not include Interconnection Facilities.

Effective Date shall mean the date on which the Standard Large Generator Interconnection Agreement becomes effective upon execution by the Parties subject to acceptance by FERC, or if filed unexecuted, upon the date specified by FERC.

Emergency Condition shall mean a condition or situation: (1) that in the judgment of the Party making the claim is imminently likely to endanger life or property; or (2) that, in the case of a Transmission Provider, is imminently likely (as determined in a non-discriminatory manner) to cause a material adverse effect on the security of, or damage to Transmission Provider's Transmission System, Transmission Provider's Interconnection Facilities or the electric systems of others to which the Transmission Provider's Transmission System is directly connected; or (3) that, in the case of Interconnection Customer, is imminently likely (as determined in a non-discriminatory manner) to cause a material adverse effect on the security of, or damage to, the Generating Facility or Interconnection Customer's Interconnection Facilities. System restoration and black start shall be considered Emergency Conditions; provided, that Interconnection Customer is not obligated by the Standard Large Generator Interconnection Agreement to possess black start capability.

Energy Resource Interconnection Service ("ERIS") shall mean an Interconnection Service that allows the Interconnection Customer to connect its Generating Facility to the Transmission Provider's Transmission System to be eligible to deliver the Generating Facility's electric output using the existing firm or non-firm capacity of the Transmission Provider's Transmission System on an as available basis. Energy Resource Interconnection Service in and of itself does not convey transmission service.

Engineering & Procurement ("E&P") Agreement shall mean an agreement that authorizes the Transmission Provider to begin engineering and procurement of long lead-time items necessary for the establishment of the interconnection in order to advance the implementation of the Interconnection Request.

Environmental Law shall mean Applicable Laws or Regulations relating to pollution or protection of the environment or natural resources.

Existing Generating Facility shall mean a Generating Facility that is either in service or under construction with an unsuspended interconnection agreement.

Federal Power Act shall mean the Federal Power Act, as amended, 16 U.S.C. §§ 791a et seq.

FERC shall mean the Federal Energy Regulatory Commission (Commission) or its successor.

Force Majeure shall mean any act of God, labor disturbance, act of the public enemy, war, insurrection, riot, fire, storm or flood, explosion, breakage or accident to machinery or equipment, any order, regulation or restriction imposed by governmental, military or lawfully established civilian authorities, or any other cause beyond a Party's control. A Force Majeure event does not include acts of negligence or intentional wrongdoing by the Party claiming Force Majeure.

Generating Facility shall mean Interconnection Customer's device for the production and/or storage for later injection of electricity identified in the Interconnection Request, but shall not include the Interconnection Customer's Interconnection Facilities. A Generating Facility consists of one or more generating unit(s) and/or storage device(s) which usually can operate independently and be brought online or taken offline individually.

Generating Facility Capacity shall mean the net capacity of the Generating Facility and the aggregate net capacity of the Generating Facility where it includes multiple energy production devices.

Generating Facility Modification shall mean modification to an Existing Generating Facility, including comparable replacement of only a portion of its equipment at the Existing Generating Facility.

Generation Replacement shall mean replacement of one or more generating units and/or storage devices at an Existing Generating Facility with one or more new generating units or storage devices at the same electrical Point of Interconnection as those being decommissioned and electrically disconnected.

Generator Replacement Interconnection Facilities Study shall mean a study to determine a list of facilities to grant an Interconnection Customer's request to interconnect a Replacement Generating Facility, the cost of those facilities, and the time required to

interconnect those facilities. The scope of the study is defined in Section 4.9.4 of the Standard Large Generator Interconnection Procedures.

Good Utility Practice shall mean any of the practices, methods and acts engaged in or approved by a significant portion of the electric industry during the relevant time period, or any of the practices, methods and acts which, in the exercise of reasonable judgment in light of the facts known at the time the decision was made, could have been expected to accomplish the desired result at a reasonable cost consistent with good business practices, reliability, safety and expedition. Good Utility Practice is not intended to be limited to the optimum practice, method, or act to the exclusion of all others, but rather to be acceptable practices, methods, or acts generally accepted in the region.

Governmental Authority shall mean any federal, state, local or other governmental regulatory or administrative agency, court, commission, department, board, or other governmental subdivision, legislature, rulemaking board, tribunal, or other governmental authority having jurisdiction over the Parties, their respective facilities, or the respective services they provide, and exercising or entitled to exercise any administrative, executive, police, or taxing authority or power; provided, however, that such term does not include Interconnection Customer, Transmission Provider, or any Affiliate thereof.

Hazardous Substances shall mean any chemicals, materials or substances defined as or included in the definition of "hazardous substances," "hazardous wastes," "hazardous materials," "hazardous constituents," "restricted hazardous materials," "extremely hazardous substances," "toxic substances," "radioactive substances," "contaminants," "pollutants," "toxic pollutants" or words of similar meaning and regulatory effect under any applicable Environmental Law, or any other chemical, material or substance, exposure to which is prohibited, limited or regulated by any applicable Environmental Law.

Informational Interconnection Study shall mean an analysis based on assumptions specified by Interconnection Customer in the Informational Interconnection Study Agreement.

Informational Interconnection Study Agreement shall mean the form of agreement contained in Appendix 2 of the LGIP for conducting the Informational Interconnection Study.

Initial Synchronization Date shall mean the date upon which the Generating Facility is initially synchronized and upon which Trial Operation begins.

In-Service Date shall mean the date upon which the Interconnection Customer reasonably expects it will be ready to begin use of the Transmission Provider's Interconnection Facilities to obtain back feed power.

Interconnection Customer shall mean any entity, including the Transmission Provider, Transmission Owner or any of the Affiliates or subsidiaries of either, that proposes to interconnect its Generating Facility with the Transmission Provider's Transmission System.

Interconnection Customer's Interconnection Facilities shall mean all facilities and equipment, as identified in Appendix A of the Standard Large Generator Interconnection Agreement, that are located between the Generating Facility and the Point of Change of Ownership, including any modification, addition, or upgrades to such facilities and equipment necessary to physically and electrically interconnect the Generating Facility to the Transmission Provider's Transmission System. Interconnection Customer's Interconnection Facilities are sole use facilities.

Interconnection Facilities shall mean the Transmission Provider's Interconnection Facilities and the Interconnection Customer's Interconnection Facilities. Collectively, Interconnection Facilities include all facilities and equipment between the Generating Facility and the Point of Interconnection, including any modification, additions or upgrades that are necessary to physically and electrically interconnect the Generating Facility to the Transmission Provider's Transmission System. Interconnection Facilities are sole use facilities and shall not include Distribution Upgrades, Stand Alone Network Upgrades or Network Upgrades. Interconnection Facilities may be shared by more than one Interconnection Customer.

Interconnection Facilities Study shall mean a study conducted by the Transmission Provider or a third party consultant for the Interconnection Customer to determine a list of facilities (including Transmission Provider's Interconnection Facilities and Network Upgrades as identified in either the Serial Interconnection System Impact Study or the Definitive Interconnection System Impact Study), the cost of those facilities, and the time required to interconnect the Generating Facility or Replacement Generating Facility with the Transmission Provider's Transmission System. The scope of the study is defined in Section 11 of the Standard Large Generator Interconnection Procedures.

Interconnection Facilities Study Agreement shall mean the form of agreement contained in Appendix 7 of the Standard Large Generator Interconnection Procedures for conducting the Interconnection Facilities Study.

Interconnection Feasibility Study shall mean a preliminary evaluation of the system impact and cost of interconnecting the Generating Facility to the Transmission Provider's Transmission System, the scope of which is described in Section 8 of the Standard Large Generator Interconnection Procedures.

Interconnection Feasibility Study Agreement shall mean the form of agreement contained in Appendix 4 of the Standard Large Generator Interconnection Procedures for conducting the Interconnection Feasibility Study.

Interconnection Request shall mean an Interconnection Customer's request, in the form of Appendix 3 to the Standard Large Generator Interconnection Procedures, in accordance with the Tariff, to interconnect a new Generating Facility, or to increase the capacity of, or make a Material Modification to the operating characteristics of, an existing Generating Facility that is interconnected with the Transmission Provider's Transmission System.

Interconnection Service shall mean the service provided by the Transmission Provider associated with interconnecting the Interconnection Customer's Generating Facility to the Transmission Provider's Transmission System and enabling it to receive electric energy and capacity from the Generating Facility at the Point of Interconnection, pursuant to the terms of the Standard Large Generator Interconnection Agreement and, if applicable, the Transmission Provider's Tariff.

Interconnection Study shall mean any of the following studies: the Replacement Impact Study, the Reliability Assessment Study, Generator Replacement Interconnection Facilities Study, the Interconnection Feasibility Study, the Informational Interconnection Study, the Serial Interconnection System Impact Study, the Definitive Interconnection System Impact Study, and the Interconnection Facilities Study described in the Standard Large Generator Interconnection Procedures. The Transmission Provider shall undertake Interconnection Studies pursuant to either a Serial Interconnection Study Process or a Definitive Interconnection Study Process as described in these Standard Large Generator Interconnection Procedures.

Interconnection Study Agreement shall mean any of the following agreements: the Interconnection Feasibility Study Agreement, the Serial Interconnection System Impact Study Agreement, the Definitive Interconnection System Impact Study Agreement, and the Interconnection Facilities Study Agreement described in the Standard Large Generator Interconnection Procedures.

IRS shall mean the Internal Revenue Service.

Joint Operating Committee shall be a group made up of representatives from Interconnection Customers and the Transmission Provider to coordinate operating and technical considerations of Interconnection Service.

Large Generating Facility shall mean a Generating Facility having a Generating Facility Capacity of more than 20 MW.

Loss shall mean any and all losses relating to injury to or death of any person or damage to property, demand, suits, recoveries, costs and expenses, court costs, attorney fees, and all other obligations by or to third parties, arising out of or resulting from the other Party's performance, or non-performance of its obligations under the Standard Large Generator Interconnection Agreement on behalf of the indemnifying Party, except in cases of gross negligence or intentional wrongdoing by the indemnifying Party.

Material Modification shall mean (1) those modifications that have a material impact on the cost or timing of any Interconnection Request with a later queue priority date in the Serial Interconnection Study Process, (2) those modifications that have a material impact on the cost or timing of any Interconnection Request with (a) a later Queue Position or (b) a Queue Position which is included in the same Cluster, each as in the Definitive Interconnection Study Process, and (3) planned modifications to an Existing Generating Facility that is undergoing evaluation for a Generating Facility Modification or Generation Replacement that have a material impact on

the Transmission System, as compared to the impacts of the Existing Generating Facility prior to the modification or replacement with respect to: i) steady-state thermal or voltage limits, ii) dynamic system stability and response, or iii) short-circuit capability limit.

Metering Equipment shall mean all metering equipment installed or to be installed at the Generating Facility pursuant to the Standard Large Generator Interconnection Agreement at the metering points, including but not limited to instrument transformers, MWh-meters, data acquisition equipment, transducers, remote terminal unit, communications equipment, phone lines, and fiber optics.

NERC shall mean the North American Electric Reliability Council or its successor organization.

Network Resource shall mean any designated generating resource owned, purchased, or leased by a Network Customer under the Network Integration Transmission Service Tariff. Network Resources do not include any resource, or any portion thereof, that is committed for sale to third parties or otherwise cannot be called upon to meet the Network Customer's Network Load on a non-interruptible basis.

Network Resource Interconnection Service ("NRIS") shall mean an Interconnection Service that allows the Interconnection Customer to integrate its Large Generating Facility with the Transmission Provider's Transmission System (1) in a manner comparable to that in which the Transmission Provider integrates its generating facilities to serve native load customers; or (2) in an RTO or ISO with market based congestion management, in the same manner as Network Resources. Network Resource Interconnection Service in and of itself does not convey transmission service.

Network Upgrades shall mean the additions, modifications, and upgrades to the Transmission Provider's Transmission System required at or beyond the point at which the Interconnection Facilities connect to the Transmission Provider's Transmission System to accommodate the interconnection of the Large Generating Facility to the Transmission Provider's Transmission System.

Notice of Dispute shall mean a written notice of a dispute or claim that arises out of or in connection with the Standard Large Generator Interconnection Agreement or its performance.

OASIS shall mean the Transmission Provider's Open Access Same-Time Information System.

Optional Interconnection Study shall mean a sensitivity analysis based on assumptions specified by the Interconnection Customer in the Optional Interconnection Study Agreement.

Optional Interconnection Study Agreement shall mean the form of agreement contained in Appendix 9 of the Standard Large Generator Interconnection Procedures for conducting the Optional Interconnection Study

Party or Parties shall mean Transmission Provider, Transmission Owner, Interconnection Customer or any combination of the above.

Permissible Technological Advancement shall mean modification to equipment that (1) results in electrical performance that is equal to or better than the electrical performance expected prior to the technology change, (2) does not cause any reliability concerns, (3) does not degrade the electrical characteristics of the generating equipment (e.g., the ratings, impedances, efficiencies, capabilities, and performance of the equipment under steady-state and dynamic conditions) and (4) does not have a material impact on the cost or timing of any Interconnection Request with a later queue priority date, and is therefore not a Material Modification. A Permissible Technological Advancement is a change in equipment that may achieve cost or grid performance efficiencies that may include turbines, inverters, plant supervisory controls or other devices but does not include changes in generation technology type or fuel type.

Phase ("Phase 1, Phase 2, or Phase 3") shall mean a distinct part of the Definitive Study Process as described in Section 10.8 of the LGIP.

Point of Change of Ownership shall mean the point, as set forth in Appendix A to the Standard Large Generator Interconnection Agreement, where the Interconnection Customer's Interconnection Facilities connect to the Transmission Provider's Interconnection Facilities.

Point of Interconnection shall mean the point, as set forth in Appendix A to the Standard Large Generator Interconnection Agreement, where the Interconnection Facilities connect to the Transmission Provider's Transmission System.

Provisional Interconnection Service shall mean interconnection service provided by Transmission Provider associated with interconnecting the Interconnection Customer's Generating Facility to Transmission Provider's Transmission System and enabling that Transmission System to receive electric energy and capacity from the Generating Facility at the Point of Interconnection, pursuant to the terms of the Provisional Large Generator Interconnection Agreement and, if applicable, the Tariff.

Provisional Large Generator Interconnection Agreement shall mean the interconnection agreement for Provisional Interconnection Service established between Transmission Provider and/or the Transmission Owner and the Interconnection Customer. This agreement shall take the form of the Large Generator Interconnection Agreement, modified for provisional purposes. Provisional Large Generator Interconnection Agreements are not eligible for suspension.

Queue shall mean a queue for valid Interconnection Requests for the Serial Interconnection Study Process or the Definitive Interconnection Study Process.

Queue Position shall mean the order of a valid Interconnection Request, relative to all other pending valid Interconnection Requests, in either the Serial Interconnection Study Process or the Definitive Interconnection Study Process. In the Serial Interconnection Study Process, the Queue Position is established based upon the date and time of receipt of the valid

Interconnection Request by the Transmission Provider. Where a Transmission Provider is administering a Definitive Interconnection Study Process, all Interconnection Requests studied in a single Cluster shall be considered equally queued but Clusters initiated earlier in time shall be considered to have an earlier Queue Position than clusters initiated later. The Queue Position of an Interconnection Request shall have no bearing on the allocation of the cost of the common Upgrades identified in the applicable Cluster Study (such costs will be allocated among Interconnection Requests in accordance with Section 10.4).

Readiness Milestone(s) shall have the meaning set forth in Section 10.11 of the LGIP.

Reasonable Efforts shall mean, with respect to an action required to be attempted or taken by a Party under the Standard Large Generator Interconnection Agreement, efforts that are timely and consistent with Good Utility Practice and are otherwise substantially equivalent to those a Party would use to protect its own interests.

Reliability Assessment Study shall mean an engineering study that evaluates the impact of a proposed Generation Replacement on the reliability of the Transmission System during the time period between the date that the Existing Generating Facility ceases commercial operations and the expected Commercial Operation Date of the Replacement Generating Facility.

Replacement Generating Facility shall mean a Generating Facility that replaces an Existing Generating Facility, or a portion thereof, at the same electrical Point of Interconnection pursuant to Section 4.9 of the Large Generator Interconnection Procedures.

Replacement Impact Study shall mean an engineering study that evaluates the impact of a proposed Generation Replacement on the reliability of the Transmission System

Resource Plan shall mean any process authorized or required by Applicable Laws and Regulations for, *inter alia*, the selection of Generating Facilities interconnected to the Transmission System of Transmission Provider.

Resource Planning Entity shall mean any entity required to develop a Resource Plan or conduct a Resource Solicitation Process.

Resource Solicitation Cluster shall mean a Cluster Study associated with a Resource Plan or related process.

Resource Solicitation Process shall mean any process authorized or required by Applicable Laws and Regulations for the acquisition of Network Resources by a Resource Planning Entity.

Scoping Meeting shall mean the meeting between representatives of the Interconnection Customer and Transmission Provider conducted for the purpose of discussing the proposed Interconnection Request, alternative interconnection options, to exchange information including any transmission data and earlier study evaluations that would be reasonably expected to affect

such interconnection options, to analyze such information, and to determine the potential feasible Points of Interconnection.

Serial Interconnection Study Process shall mean the process of studying interconnection requests on a serial basis inclusive of the Interconnection Feasibility Study, the Serial Interconnection System Impact Study, and the Optional Interconnection Study Process.

Serial Interconnection System Impact Study shall mean an engineering study that evaluates the impact of the proposed interconnection on the safety and reliability of Transmission Provider's Transmission System and, if applicable, an Affected System. The study shall identify and detail the system impacts that would result if the Generating Facility were interconnected without project modifications or system modifications, focusing on the adverse system impacts identified in the Interconnection Feasibility Study, or to study potential impacts, including but not limited to those identified in the Scoping Meeting as described in the LGIP.

Serial Interconnection System Impact Study Agreement shall mean the form of agreement contained in Appendix 5 of the Standard Large Generator Interconnection Procedures for conducting the Serial Interconnection System Impact Study.

Site Control shall mean the exclusive land right to develop, construct, operate, and maintain the Generating Facility over the term of the expected operation of the Generating Facility. Site Control shall include the right to develop, construct, operate, and maintain Interconnection Customer's Interconnection Facilities. Site Control may be demonstrated by documentation establishing: (1) ownership of, a leasehold interest in, or a right to develop a site of sufficient size to construct and operate the Generating Facility and associated Interconnection Customer's Interconnection Facilities; (2) an option to purchase or acquire a leasehold interest in a site of sufficient size to construct and operate the Generating Facility and associated Interconnection Facilities; or (3) any other documentation that clearly demonstrates the right of the Interconnection Customer to exclusively occupy a site of sufficient size to construct and operate the Generating Facility. Site Control for any co-located Generating Facilities is demonstrated by a contract or other agreement demonstrating shared land use for all co-located projects that meet the aforementioned provisions of this Site Control definition.

Small Generating Facility shall mean a Generating Facility that has a Generating Facility Capacity of no more than 20 MW.

Stand Alone Network Upgrades shall mean Network Upgrades that are not part of an Affected System that an Interconnection Customer may construct without affecting day-to-day operations of the Transmission System during their construction. Both the Transmission Provider and the Interconnection Customer must agree as to what constitutes Stand Alone Network Upgrades and identify them in Appendix A to the Standard Large Generator Interconnection Agreement. If the Transmission Provider and Interconnection Customer disagree about whether a particular Network Upgrade is a Stand Alone Network Upgrade, the Transmission Provider must provide the Interconnection Customer a written technical

explanation outlining why the Transmission Provider does not consider the Network Upgrade to be a Stand Alone Network Upgrade within 15 days of its determination.

Standard Large Generator Interconnection Agreement (LGIA) shall mean the form of interconnection agreement applicable to an Interconnection Request pertaining to a Large Generating Facility that is included in the Transmission Provider's Tariff.

Standard Large Generator Interconnection Procedures (LGIP) shall mean the interconnection procedures applicable to an Interconnection Request pertaining to a Large Generating Facility that are included in the Transmission Provider's Tariff.

Surplus Interconnection Service shall mean any unneeded portion of Interconnection Service established in a Large Generator Interconnection Agreement, such that if Surplus Interconnection Service is utilized the total amount of Interconnection Service at the Point of Interconnection would remain the same.

System Protection Facilities shall mean the equipment, including necessary protection signal communications equipment, required to protect (1) the Transmission Provider's Transmission System from faults or other electrical disturbances occurring at the Generating Facility and (2) the Generating Facility from faults or other electrical system disturbances occurring on the Transmission Provider's Transmission System or on other delivery systems or other generating systems to which the Transmission Provider's Transmission System is directly connected.

Tariff shall mean the Transmission Provider's Tariff through which open access transmission service and Interconnection Service are offered, as filed with FERC, and as amended or supplemented from time to time, or any successor tariff.

Transmission Owner shall mean an entity that owns, leases or otherwise possesses an interest in the portion of the Transmission System at the Point of Interconnection and may be a Party to the Standard Large Generator Interconnection Agreement to the extent necessary.

Transmission Provider shall mean the public utility (or its designated agent) that owns, controls, or operates transmission or distribution facilities used for the transmission of electricity in interstate commerce and provides transmission service under the Tariff. The term Transmission Provider should be read to include the Transmission Owner when the Transmission Owner is separate from the Transmission Provider.

Transmission Provider's Interconnection Facilities shall mean all facilities and equipment owned, controlled or operated by the Transmission Provider from the Point of Change of Ownership to the Point of Interconnection as identified in Appendix A to the Standard Large Generator Interconnection Agreement, including any modifications, additions or upgrades to such facilities and equipment. Transmission Provider's Interconnection Facilities are sole use facilities (e.g. for generator interconnection) and shall not include Distribution Upgrades, Stand Alone Network Upgrades or Network Upgrades. Transmission Provider’s Interconnection Facilities may be shared by more than one Interconnection Customer.

Transmission System shall mean the facilities owned, controlled or operated by the Transmission Provider or Transmission Owner that are used to provide transmission service under the Tariff.

Trial Operation shall mean the period during which Interconnection Customer is engaged in on-site test operations and commissioning of the Generating Facility prior to Commercial Operation.

Variable Energy Resource shall mean a device for the production of electricity that is characterized by an energy source that: (1) is renewable; (2) cannot be stored by the facility owner or operator; and (3) has variability that is beyond the control of the facility owner or operator.

Withdrawal Penalty shall have the meaning set forth in Section 4.7 of the LGIP.

Article 2. Effective Date, Term, and Termination

2.1 Effective Date. This LGIA shall become effective upon execution by the Parties subject to acceptance by FERC (if applicable), or if filed unexecuted, upon the date specified by FERC. Transmission Provider shall promptly file this LGIA with FERC upon execution in accordance with Article 3.1, if required.

2.2 Term of Agreement. Subject to the provisions of Article 2.3, this LGIA shall remain in effect for a period of ten (10) years from the Effective Date or such other longer period as Interconnection Customer may request (Term to be specified in individual agreements) and shall be automatically renewed for each successive one-year period thereafter.

2.3 Termination Procedures.

2.3.1 Written Notice. This LGIA may be terminated by Interconnection Customer after giving Transmission Provider ninety (90) Calendar Days advance written notice, or by Transmission Provider notifying FERC after the Generating Facility permanently ceases Commercial Operation. Notwithstanding the forgoing, this LGIA shall not be terminated if the Interconnection Customer has been approved for replacing or modifying its Generating Facility per Section 4.9 of the LGIP until the LGIA associated with the replacement facility is in effect.

2.3.2 Default. Either Party may terminate this LGIA in accordance with Article 17.

2.3.3 Notwithstanding Articles 2.3.1 and 2.3.2, no termination shall become effective until the Parties have complied with all Applicable Laws and Regulations applicable to such termination, including the filing with FERC of a notice of termination of this LGIA, which notice has been accepted for filing by FERC.

2.4 Termination Costs. If a Party elects to terminate this Agreement pursuant to Article 2.3 above, each Party shall pay all costs incurred (including any cancellation costs relating to orders or contracts for Interconnection Facilities and equipment) or charges assessed by the other Party, as of the date of the other Party's receipt of such notice of termination, that are the responsibility of the Terminating Party under this LGIA. In the event of termination by a Party, the Parties shall use commercially Reasonable Efforts to mitigate the costs, damages and charges arising as a consequence of termination. Upon termination of this LGIA, unless otherwise ordered or approved by FERC:

2.4.1 With respect to any portion of Transmission Provider's Interconnection Facilities that have not yet been constructed or installed, Transmission Provider shall to the extent possible and with Interconnection Customer's authorization cancel any pending orders of, or return, any materials or equipment for, or contracts for construction of, such facilities; provided that in the event Interconnection Customer elects not to authorize such cancellation, Interconnection Customer shall assume all payment obligations with respect to such materials, equipment, and contracts, and Transmission Provider shall deliver such material and equipment, and, if necessary, assign such contracts, to Interconnection Customer as soon as practicable, at Interconnection Customer's expense. To the extent that Interconnection Customer has already paid Transmission Provider for any or all such costs of materials or equipment not taken by Interconnection Customer, Transmission Provider shall promptly refund such amounts to Interconnection Customer, less any costs, including penalties incurred by Transmission Provider to cancel any pending orders of or return such materials, equipment, or contracts.

If an Interconnection Customer terminates this LGIA, it shall be responsible for all costs incurred in association with that Interconnection Customer's interconnection, including any cancellation costs relating to orders or contracts for Interconnection Facilities and equipment, and other expenses including any Network Upgrades for which Transmission Provider has incurred expenses and has not been reimbursed by Interconnection Customer.

2.4.2 Transmission Provider may, at its option, retain any portion of such materials, equipment, or facilities that Interconnection Customer chooses not to accept delivery of, in which case Transmission Provider shall be responsible for all costs associated with procuring such materials, equipment, or facilities.

2.4.3 With respect to any portion of the Interconnection Facilities, and any other facilities already installed or constructed pursuant to the terms of this LGIA, Interconnection Customer shall be responsible for all costs associated with the removal, relocation or other disposition or retirement of such materials, equipment, or facilities.

2.5 Disconnection. Upon termination of this LGIA, the Parties will take all appropriate steps to disconnect the Large Generating Facility from the Transmission System. All costs required to effectuate such disconnection shall be borne by the terminating Party, unless

such termination resulted from the non-terminating Party's Default of this LGIA or such non-terminating Party otherwise is responsible for these costs under this LGIA.

2.6 Survival. This LGIA shall continue in effect after termination to the extent necessary to provide for final billings and payments and for costs incurred hereunder, including billings and payments pursuant to this LGIA; to permit the determination and enforcement of liability and indemnification obligations arising from acts or events that occurred while this LGIA was in effect; and to permit each Party to have access to the lands of the other Party pursuant to this LGIA or other applicable agreements, to disconnect, remove or salvage its own facilities and equipment.

Article 3. Regulatory Filings

3.1 Filing. Transmission Provider shall file this LGIA (and any amendment hereto) with the appropriate Governmental Authority, if required. Interconnection Customer may request that any information so provided be subject to the confidentiality provisions of Article 22. If Interconnection Customer has executed this LGIA, or any amendment thereto, Interconnection Customer shall reasonably cooperate with Transmission Provider with respect to such filing and to provide any information reasonably requested by Transmission Provider needed to comply with applicable regulatory requirements.

Article 4. Scope of Service

4.1 Interconnection Product Options. Interconnection Customer has selected the following (checked) type of Interconnection Service:

4.1.1 Energy Resource Interconnection Service.

4.1.1.1 The Product. Energy Resource Interconnection Service allows Interconnection Customer to connect the Large Generating Facility to the Transmission System and be eligible to deliver the Large Generating Facility's output using the existing firm or non-firm capacity of the Transmission System on an "as available" basis. To the extent Interconnection Customer wants to receive Energy Resource Interconnection Service, Transmission Provider shall construct facilities identified in Attachment A.

4.1.1.2 Transmission Delivery Service Implications. Under Energy Resource Interconnection Service, Interconnection Customer will be eligible to inject power from the Large Generating Facility into and deliver power across the interconnecting Transmission Provider's Transmission System on an "as available" basis up to the amount of MWs identified in the applicable stability and steady state studies to the extent the upgrades initially required to qualify

for Energy Resource Interconnection Service have been constructed. Where eligible to do so (e.g., PJM, ISO-NE, NYISO), Interconnection Customer may place a bid to sell into the market up to the maximum identified Large Generating Facility output, subject to any conditions specified in the interconnection service approval, and the Large Generating Facility will be dispatched to the extent Interconnection Customer's bid clears. In all other instances, no transmission delivery service from the Large Generating Facility is assured, but Interconnection Customer may obtain Point-to-Point Transmission Service, Network Integration Transmission Service, or be used for secondary network transmission service, pursuant to Transmission Provider's Tariff, up to the maximum output identified in the stability and steady state studies. In those instances, in order for Interconnection Customer to obtain the right to deliver or inject energy beyond the Large Generating Facility Point of Interconnection or to improve its ability to do so, transmission delivery service must be obtained pursuant to the provisions of Transmission Provider's Tariff. The Interconnection Customer's ability to inject its Large Generating Facility output beyond the Point of Interconnection, therefore, will depend on the existing capacity of Transmission Provider's Transmission System at such time as a transmission service request is made that would accommodate such delivery. The provision of firm Point-to-Point Transmission Service or Network Integration Transmission Service may require the construction of additional Network Upgrades.

4.1.2 Network Resource Interconnection Service.

4.1.2.1 The Product. Transmission Provider must conduct the necessary studies and construct the Network Upgrades needed to integrate the Large Generating Facility (1) in a manner comparable to that in which Transmission Provider integrates its generating facilities to serve native load customers; or (2) in an ISO or RTO with market based congestion management, in the same manner as all Network Resources. To the extent Interconnection Customer wants to receive Network Resource Interconnection Service, Transmission Provider shall construct the facilities identified in Attachment A to this LGIA.

4.1.2.2 Transmission Delivery Service Implications. Network Resource Interconnection Service allows Interconnection Customer's Large Generating Facility to be designated by any Network Customer under the Tariff on Transmission Provider's Transmission System as a Network Resource, up to the Large Generating Facility's full output, on the same basis as existing Network Resources

interconnected to Transmission Provider's Transmission System, and to be studied as a Network Resource on the assumption that such a designation will occur. Although Network Resource Interconnection Service does not convey a reservation of transmission service, any Network Customer under the Tariff can utilize its network service under the Tariff to obtain delivery of energy from the interconnected Interconnection Customer's Large Generating Facility in the same manner as it accesses Network Resources. A Large Generating Facility receiving Network Resource Interconnection Service may also be used to provide Ancillary Services after technical studies and/or periodic analyses are performed with respect to the Large Generating Facility's ability to provide any applicable Ancillary Services, provided that such studies and analyses have been or would be required in connection with the provision of such Ancillary Services by any existing Network Resource. However, if an Interconnection Customer's Large Generating Facility has not been designated as a Network Resource by any load, it cannot be required to provide Ancillary Services except to the extent such requirements extend to all generating facilities that are similarly situated. The provision of Network Integration Transmission Service or firm Point-to-Point Transmission Service may require additional studies and the construction of additional upgrades. Because such studies and upgrades would be associated with a request for delivery service under the Tariff, cost responsibility for the studies and upgrades would be in accordance with FERC's policy for pricing transmission delivery services.

Network Resource Interconnection Service does not necessarily provide Interconnection Customer with the capability to physically deliver the output of its Large Generating Facility to any particular load on Transmission Provider's Transmission System without incurring congestion costs. In the event of transmission constraints on Transmission Provider's Transmission System, Interconnection Customer's Large Generating Facility shall be subject to the applicable congestion management procedures in Transmission Provider's Transmission System in the same manner as Network Resources.

There is no requirement either at the time of study or interconnection, or at any point in the future, that Interconnection Customer's Large Generating Facility be designated as a Network Resource by a Network Service Customer under the Tariff or that Interconnection Customer identify a specific buyer (or sink). To the extent a Network Customer does designate the Large

Generating Facility as a Network Resource, it must do so pursuant to Transmission Provider's Tariff.

Once an Interconnection Customer satisfies the requirements for obtaining Network Resource Interconnection Service, any future transmission service request for delivery from the Large Generating Facility within Transmission Provider's Transmission System of any amount of capacity and/or energy, up to the amount initially studied, will not require that any additional studies be performed or that any further upgrades associated with such Large Generating Facility be undertaken, regardless of whether or not such Large Generating Facility is ever designated by a Network Customer as a Network Resource and regardless of changes in ownership of the Large Generating Facility. However, the reduction or elimination of congestion or redispatch costs may require additional studies and the construction of additional upgrades.

To the extent Interconnection Customer enters into an arrangement for long term transmission service for deliveries from the Large Generating Facility outside Transmission Provider's Transmission System, such request may require additional studies and upgrades in order for Transmission Provider to grant such request.

4.2 Provision of Service. Transmission Provider shall provide Interconnection Service for the Large Generating Facility at the Point of Interconnection.

4.3 Performance Standards. Each Party shall perform all of its obligations under this LGIA in accordance with Applicable Laws and Regulations, Applicable Reliability Standards, and Good Utility Practice, and to the extent a Party is required or prevented or limited in taking any action by such regulations and standards, such Party shall not be deemed to be in Breach of this LGIA for its compliance therewith. If such Party is a Transmission Provider or Transmission Owner, then that Party shall amend the LGIA and submit the amendment to FERC for approval.

4.4 No Transmission Delivery Service. The execution of this LGIA does not constitute a request for, nor the provision of, any transmission delivery service under Transmission Provider's Tariff, and does not convey any right to deliver electricity to any specific customer or Point of Delivery.

4.5 Interconnection Customer Provided Services. The services provided by Interconnection Customer under this LGIA are set forth in Article 9.6 and Article 13.5.1. Interconnection Customer shall be paid for such services in accordance with Article 11.6.

Article 5. Interconnection Facilities Engineering, Procurement, and Construction

5.1 Options. Unless otherwise mutually agreed to between the Parties, Interconnection Customer shall select the In-Service Date, Initial Synchronization Date, and Commercial Operation Date; and either the Standard Option or Alternate Option set forth below for completion of Transmission Provider's Interconnection Facilities and Network Upgrades as set forth in Appendix A, Interconnection Facilities and Network Upgrades, and such dates and selected option shall be set forth in Appendix B, Milestones. At the same time, Interconnection Customer shall indicate whether it elects to exercise the Option to Build set forth in Article 5.1.3 below. If the dates designated by Interconnection Customer are not acceptable to Transmission Provider, Transmission Provider shall so notify Interconnection Customer within thirty (30) Calendar Days. Upon receipt of the notification that Interconnection Customer's designated dates are not acceptable to Transmission Provider, the Interconnection Customer shall notify Transmission Provider within thirty (30) Calendar Days whether it elects to exercise the Option to Build if it has not already elected to exercise the Option to Build.

5.1.1 Standard Option. Transmission Provider shall design, procure, and construct Transmission Provider's Interconnection Facilities and Network Upgrades, using Reasonable Efforts to complete Transmission Provider's Interconnection Facilities and Network Upgrades by the dates set forth in Appendix B, Milestones. Transmission Provider shall not be required to undertake any action which is inconsistent with its standard safety practices, its material and equipment specifications, its design criteria and construction procedures, its labor agreements, and Applicable Laws and Regulations. In the event Transmission Provider reasonably expects that it will not be able to complete Transmission Provider's Interconnection Facilities and Network Upgrades by the specified dates, Transmission Provider shall promptly provide written notice to Interconnection Customer and shall undertake Reasonable Efforts to meet the earliest dates thereafter.

5.1.2 Alternate Option. If the dates designated by Interconnection Customer are acceptable to Transmission Provider, Transmission Provider shall so notify Interconnection Customer within thirty (30) Calendar Days, and shall assume responsibility for the design, procurement and construction of Transmission Provider's Interconnection Facilities by the designated dates.

If Transmission Provider subsequently fails to complete Transmission Provider's Interconnection Facilities by the In-Service Date, to the extent necessary to provide back feed power; or fails to complete Network Upgrades by the Initial Synchronization Date to the extent necessary to allow for Trial Operation at full power output, unless other arrangements are made by the Parties for such Trial Operation; or fails to complete the Network Upgrades by the Commercial Operation Date, as such dates are reflected in Appendix B, Milestones; Transmission Provider shall pay Interconnection Customer liquidated damages in accordance with Article 5.3, Liquidated Damages, provided, however, the dates designated by Interconnection Customer shall be extended day for day for each

day that the applicable RTO or ISO refuses to grant clearances to install equipment.

5.1.3 Option to Build. Interconnection Customer shall have the option to assume responsibility for the design, procurement and construction of Transmission Provider's Interconnection Facilities and Stand Alone Network Upgrades on the dates specified in Article 5.1.2. Transmission Provider and Interconnection Customer must agree as to what constitutes Stand Alone Network Upgrades and identify such Stand Alone Network Upgrades in Appendix A. Except for Stand Alone Network Upgrades, Interconnection Customer shall have no right to construct Network Upgrades under this option.

5.1.4 Negotiated Option. If the dates designated by Interconnection Customer are not acceptable to Transmission Provider, the Parties shall in good faith attempt to negotiate terms and conditions (including revision of the specified dates and liquidated damages, the provision of incentives, or the procurement and construction of all facilities other than Transmission Provider's Interconnection Facilities and Stand Alone Network Upgrades if the Interconnection Customer elects to exercise the Option to Build under Article 5.1.3). If the Parties are unable to reach agreement on such terms and conditions, then, pursuant to Article 5.1.1 (Standard Option), Transmission Provider shall assume responsibility for the design, procurement and construction of all facilities other than Transmission Provider's Interconnection Facilities and Stand Alone Network Upgrades if the Interconnection Customer elects to exercise the Option to build.

5.2 General Conditions Applicable to Option to Build. If Interconnection Customer assumes responsibility for the design, procurement and construction of Transmission Provider's Interconnection Facilities and Stand Alone Network Upgrades,

(1) Interconnection Customer shall engineer, procure equipment, and construct Transmission Provider's Interconnection Facilities and Stand Alone Network Upgrades (or portions thereof) using Good Utility Practice and using standards and specifications provided in advance by Transmission Provider;

(2) Interconnection Customer's engineering, procurement and construction of Transmission Provider's Interconnection Facilities and Stand Alone Network Upgrades shall comply with all requirements of law to which Transmission Provider would be subject in the engineering, procurement or construction of Transmission Provider's Interconnection Facilities and Stand Alone Network Upgrades;

(3) Transmission Provider shall review and approve the engineering design, equipment acceptance tests, and the construction of Transmission Provider's Interconnection Facilities and Stand Alone Network Upgrades;

(4) prior to commencement of construction, Interconnection Customer shall provide to Transmission Provider a schedule for construction of Transmission Provider's Interconnection Facilities and Stand Alone Network Upgrades, and shall promptly respond to requests for information from Transmission Provider;

(5) at any time during construction, Transmission Provider shall have the right to gain unrestricted access to Transmission Provider's Interconnection Facilities and Stand Alone Network Upgrades and to conduct inspections of the same;

(6) at any time during construction, should any phase of the engineering, equipment procurement, or construction of Transmission Provider's Interconnection Facilities and Stand Alone Network Upgrades not meet the standards and specifications provided by Transmission Provider, Interconnection Customer shall be obligated to remedy deficiencies in that portion of Transmission Provider's Interconnection Facilities and Stand Alone Network Upgrades;

(7) Interconnection Customer shall indemnify Transmission Provider for claims arising from Interconnection Customer's construction of Transmission Provider's Interconnection Facilities and Stand Alone Network Upgrades under the terms and procedures applicable to Article 18.1 Indemnity;

(8) Interconnection Customer shall transfer control of Transmission Provider's Interconnection Facilities and Stand Alone Network Upgrades to Transmission Provider;

(9) Unless Parties otherwise agree, Interconnection Customer shall transfer ownership of Transmission Provider's Interconnection Facilities and Stand-Alone Network Upgrades to Transmission Provider;

(10) Transmission Provider shall approve and accept for operation and maintenance Transmission Provider's Interconnection Facilities and Stand Alone Network Upgrades to the extent engineered, procured, and constructed in accordance with this Article 5.2;

(11) Interconnection Customer shall deliver to Transmission Provider "as-built" drawings, information, and any other documents that are reasonably required by Transmission Provider to assure that the Interconnection Facilities and Stand-Alone Network Upgrades are built to the standards and specifications required by Transmission Provider; and

(12) If Interconnection Customer exercises the Option to Build pursuant to Article 5.1.3, Interconnection Customer shall pay Transmission Provider the agreed upon amount of [$ PLACEHOLDER] for Transmission Provider to execute the responsibilities enumerated to Transmission Provider under Article 5.2.

Transmission Provider shall invoice Interconnection Customer for this total amount to be divided on a monthly basis pursuant to Article 12.

5.3 Liquidated Damages. The actual damages to Interconnection Customer, in the event Transmission Provider's Interconnection Facilities or Network Upgrades are not completed by the dates designated by Interconnection Customer and accepted by Transmission Provider pursuant to subparagraphs 5.1.2 or 5.1.4, above, may include Interconnection Customer's fixed operation and maintenance costs and lost opportunity costs. Such actual damages are uncertain and impossible to determine at this time. Because of such uncertainty, any liquidated damages paid by Transmission Provider to Interconnection Customer in the event that Transmission Provider does not complete any portion of Transmission Provider's Interconnection Facilities or Network Upgrades by the applicable dates, shall be an amount equal to ½ of 1 percent per day of the actual cost of Transmission Provider's Interconnection Facilities and Network Upgrades, in the aggregate, for which Transmission Provider has assumed responsibility to design, procure and construct.

However, in no event shall the total liquidated damages exceed 20 percent of the actual cost of Transmission Provider's Interconnection Facilities and Network Upgrades for which Transmission Provider has assumed responsibility to design, procure, and construct. The foregoing payments will be made by Transmission Provider to Interconnection Customer as just compensation for the damages caused to Interconnection Customer, which actual damages are uncertain and impossible to determine at this time, and as reasonable liquidated damages, but not as a penalty or a method to secure performance of this LGIA. Liquidated damages, when the Parties agree to them, are the exclusive remedy for the Transmission Provider's failure to meet its schedule.

No liquidated damages shall be paid to Interconnection Customer if: (1) Interconnection Customer is not ready to commence use of Transmission Provider's Interconnection Facilities or Network Upgrades to take the delivery of power for the Large Generating Facility's Trial Operation or to export power from the Large Generating Facility on the specified dates, unless Interconnection Customer would have been able to commence use of Transmission Provider's Interconnection Facilities or Network Upgrades to take the delivery of power for Large Generating Facility's Trial Operation or to export power from the Large Generating Facility, but for Transmission Provider's delay; (2) Transmission Provider's failure to meet the specified dates is the result of the action or inaction of Interconnection Customer or any other Interconnection Customer who has entered into an LGIA with Transmission Provider or any cause beyond Transmission Provider's reasonable control or reasonable ability to cure; (3) the Interconnection Customer has assumed responsibility for the design, procurement and construction of Transmission Provider's Interconnection Facilities and Stand Alone Network Upgrades; or (4) the Parties have otherwise agreed.

5.4 Power System Stabilizers. The Interconnection Customer shall procure, install, maintain and operate Power System Stabilizers in accordance with the guidelines and

procedures established by the Applicable Reliability Council. Transmission Provider reserves the right to reasonably establish minimum acceptable settings for any installed Power System Stabilizers, subject to the design and operating limitations of the Large Generating Facility. If the Large Generating Facility's Power System Stabilizers are removed from service or not capable of automatic operation, Interconnection Customer shall immediately notify Transmission Provider's system operator, or its designated representative. The requirements of this paragraph shall not apply to wind generators.

5.5 Equipment Procurement. If responsibility for construction of Transmission Provider's Interconnection Facilities or Network Upgrades is to be borne by Transmission Provider, then Transmission Provider shall commence design of Transmission Provider's Interconnection Facilities or Network Upgrades and procure necessary equipment as soon as practicable after all of the following conditions are satisfied, unless the Parties otherwise agree in writing:

5.5.1 Transmission Provider has completed the Interconnection Facilities Study pursuant to the Interconnection Facilities Study Agreement;

5.5.2 Transmission Provider has received written authorization to proceed with design and procurement from Interconnection Customer by the date specified in Appendix B, Milestones; and

5.5.3 Interconnection Customer has provided security to Transmission Provider in accordance with Article 11.5 by the dates specified in Appendix B, Milestones.

5.6 Construction Commencement. Transmission Provider shall commence construction of Transmission Provider's Interconnection Facilities and Network Upgrades for which it is responsible as soon as practicable after the following additional conditions are satisfied:

5.6.1 Approval of the appropriate Governmental Authority has been obtained for any facilities requiring regulatory approval;

5.6.2 Necessary real property rights and rights-of-way have been obtained, to the extent required for the construction of a discrete aspect of Transmission Provider's Interconnection Facilities and Network Upgrades;

5.6.3 Transmission Provider has received written authorization to proceed with construction from Interconnection Customer by the date specified in Appendix B, Milestones; and

5.6.4 Interconnection Customer has provided security to Transmission Provider in accordance with Article 11.5 by the dates specified in Appendix B, Milestones.

5.7 Work Progress. The Parties will keep each other advised periodically as to the progress of their respective design, procurement and construction efforts. Either Party may, at any time, request a progress report from the other Party. If, at any time, Interconnection

Customer determines that the completion of Transmission Provider's Interconnection Facilities will not be required until after the specified In-Service Date, Interconnection Customer will provide written notice to Transmission Provider of such later date upon which the completion of Transmission Provider's Interconnection Facilities will be required.

5.8 Information Exchange. As soon as reasonably practicable after the Effective Date, the Parties shall exchange information regarding the design and compatibility of the Parties' Interconnection Facilities and compatibility of the Interconnection Facilities with Transmission Provider's Transmission System, and shall work diligently and in good faith to make any necessary design changes.

5.9 Other Interconnection Options.

5.9.1 Limited Operation.
If any of Transmission Provider's Interconnection Facilities or Network Upgrades are not reasonably expected to be completed prior to the Commercial Operation Date of the Large Generating Facility, Transmission Provider shall, upon the request and at the expense of Interconnection Customer, perform operating studies on a timely basis to determine the extent to which the Large Generating Facility and Interconnection Customer's Interconnection Facilities may operate prior to the completion of Transmission Provider's Interconnection Facilities or Network Upgrades consistent with Applicable Laws and Regulations, Applicable Reliability Standards, Good Utility Practice, and this LGIA. Transmission Provider shall permit Interconnection Customer to operate the Large Generating Facility and Interconnection Customer's Interconnection Facilities in accordance with the results of such studies.

5.9.2 Provisional Interconnection Service. Upon the request of Interconnection Customer, and prior to completion of requisite Interconnection Facilities, Network Upgrades, Distribution Upgrades, or System Protection Facilities Transmission Provider may execute a Provisional Large Generator Interconnection Agreement or Interconnection Customer may request the filing of an unexecuted Provisional Large Generator Interconnection Agreement with the Interconnection Customer for limited interconnection service at the discretion of Transmission Provider based upon an evaluation that will consider the results of available studies. Transmission Provider shall determine, through available studies or additional studies as necessary, whether stability, short circuit, thermal, and/or voltage issues would arise if Interconnection Customer interconnects without modifications to the Generating Facility or Transmission System. Transmission Provider shall determine whether any Interconnection Facilities, Network Upgrades, Distribution Upgrades, or System Protection Facilities that are necessary to meet the requirements of NERC, or any applicable Regional Entity for the interconnection of a new, modified and/or expanded Generating Facility are in place prior to the commencement of Interconnection Service from the Generating Facility. Where available studies indicate that such, Interconnection Facilities, Network Upgrades, Distribution Upgrades, and/or System Protection Facilities that are required for the interconnection of a new, modified and/or expanded Generating Facility are not currently

in place, Transmission Provider will perform a study, at the Interconnection Customer's expense, to confirm the facilities that are required for Provisional Interconnection Service. The maximum permissible output of the Generating Facility in the Provisional Large Generator Interconnection Agreement shall be studied and updated annually and at the Interconnection Customer's expense. Interconnection Customer assumes all risk and liabilities with respect to changes between the Provisional Large Generator Interconnection Agreement and the Large Generator Interconnection Agreement, including changes in output limits and Interconnection Facilities, Network Upgrades, Distribution Upgrades, and/or System Protection Facilities cost responsibilities.

5.10 Interconnection Customer's Interconnection Facilities ("ICIF"). Interconnection Customer shall, at its expense, design, procure, construct, own and install the ICIF, as set forth in Appendix A, Interconnection Facilities, Network Upgrades and Distribution Upgrades.

5.10.1 Interconnection Customer's Interconnection Facility Specifications. Interconnection Customer shall submit initial specifications for the ICIF, including System Protection Facilities, to Transmission Provider at least one hundred eighty (180) Calendar Days prior to the Initial Synchronization Date; and final specifications for review and comment at least ninety (90) Calendar Days prior to the Initial Synchronization Date. Transmission Provider shall review such specifications to ensure that the ICIF are compatible with the technical specifications, operational control, and safety requirements of Transmission Provider and comment on such specifications within thirty (30) Calendar Days of Interconnection Customer's submission. All specifications provided hereunder shall be deemed confidential.

5.10.2 Transmission Provider's Review. Transmission Provider's review of Interconnection Customer's final specifications shall not be construed as confirming, endorsing, or providing a warranty as to the design, fitness, safety, durability or reliability of the Large Generating Facility, or the ICIF. Interconnection Customer shall make such changes to the ICIF as may reasonably be required by Transmission Provider, in accordance with Good Utility Practice, to ensure that the ICIF are compatible with the technical specifications, operational control, and safety requirements of Transmission Provider.

5.10.3 ICIF Construction. The ICIF shall be designed and constructed in accordance with Good Utility Practice. Within one hundred twenty (120) Calendar Days after the Commercial Operation Date, unless the Parties agree on another mutually acceptable deadline, Interconnection Customer shall deliver to Transmission Provider "as-built" drawings, information and documents for the ICIF, such as: a one-line diagram, a site plan showing the Large Generating Facility and the ICIF, plan and elevation drawings showing the layout of the ICIF, a relay functional diagram, relaying AC and DC schematic wiring diagrams and relay settings for all facilities associated with Interconnection Customer's step-up transformers, the facilities connecting the Large Generating Facility to the step-up transformers and

the ICIF, and the impedances (determined by factory tests) for the associated step-up transformers and the Large Generating Facility. The Interconnection Customer shall provide Transmission Provider specifications for the excitation system, automatic voltage regulator, Large Generating Facility control and protection settings, transformer tap settings, and communications, if applicable.

5.11 Transmission Provider's Interconnection Facilities Construction. Transmission Provider's Interconnection Facilities shall be designed and constructed in accordance with Good Utility Practice. Upon request, within one hundred twenty (120) Calendar Days after the Commercial Operation Date, unless the Parties agree on another mutually acceptable deadline, Transmission Provider shall deliver to Interconnection Customer the following "as-built" drawings, information and documents for Transmission Provider's Interconnection Facilities [include appropriate drawings and relay diagrams].

Transmission Provider will obtain control of Transmission Provider's Interconnection Facilities and Stand Alone Network Upgrades upon completion of such facilities.

5.12 Access Rights. Upon reasonable notice and supervision by a Party, and subject to any required or necessary regulatory approvals, a Party ("Granting Party") shall furnish at no cost to the other Party ("Access Party") any rights of use, licenses, rights of way and easements with respect to lands owned or controlled by the Granting Party, its agents (if allowed under the applicable agency agreement), or any Affiliate, that are necessary to enable the Access Party to obtain ingress and egress to construct, operate, maintain, repair, test (or witness testing), inspect, replace or remove facilities and equipment to: (i) interconnect the Large Generating Facility with the Transmission System; (ii) operate and maintain the Large Generating Facility, the Interconnection Facilities and the Transmission System; and (iii) disconnect or remove the Access Party's facilities and equipment upon termination of this LGIA. In exercising such licenses, rights of way and easements, the Access Party shall not unreasonably disrupt or interfere with normal operation of the Granting Party's business and shall adhere to the safety rules and procedures established in advance, as may be changed from time to time, by the Granting Party and provided to the Access Party.

5.13 Lands of Other Property Owners. If any part of Transmission Provider or Transmission Owner's Interconnection Facilities and/or Network Upgrades is to be installed on property owned by persons other than Interconnection Customer or Transmission Provider or Transmission Owner, Transmission Provider or Transmission Owner shall at Interconnection Customer's expense use efforts, similar in nature and extent to those that it typically undertakes on its own behalf or on behalf of its Affiliates, including use of its eminent domain authority, and to the extent consistent with state law, to procure from such persons any rights of use, licenses, rights of way and easements that are necessary to construct, operate, maintain, test, inspect, replace or remove Transmission Provider or Transmission Owner's Interconnection Facilities and/or Network Upgrades upon such property.

5.14 Permits. Transmission Provider or Transmission Owner and Interconnection Customer shall cooperate with each other in good faith in obtaining all permits, licenses, and authorizations that are necessary to accomplish the interconnection in compliance with Applicable Laws and Regulations. With respect to this paragraph, Transmission Provider or Transmission Owner shall provide permitting assistance to Interconnection Customer comparable to that provided to Transmission Provider's own, or an Affiliate's generation.

5.15 Early Construction of Base Case Facilities. Interconnection Customer may request Transmission Provider to construct, and Transmission Provider shall construct, using Reasonable Efforts to accommodate Interconnection Customer's In-Service Date, all or any portion of any Network Upgrades required for Interconnection Customer to be interconnected to the Transmission System which are included in the Base Case of the Facilities Study for Interconnection Customer, and which also are required to be constructed for another Interconnection Customer, but where such construction is not scheduled to be completed in time to achieve Interconnection Customer's In-Service Date.

5.16 Suspension. Interconnection Customer reserves the right, upon written notice to Transmission Provider, to suspend at any time all work by Transmission Provider associated with the construction and installation of Transmission Provider's Interconnection Facilities and/or Network Upgrades required under this LGIA with the condition that Transmission System shall be left in a safe and reliable condition in accordance with Good Utility Practice and Transmission Provider's safety and reliability criteria. In such event, (a) all milestone dates occurring after the effective date of the suspension shall be suspended during the suspension period and (b) Interconnection Customer shall be responsible for all reasonable and necessary costs which Transmission Provider (i) has incurred pursuant to this LGIA prior to the suspension and (ii) incurs in suspending such work, including any costs incurred to perform such work as may be necessary to ensure the safety of persons and property and the integrity of the Transmission System during such suspension and, if applicable, any costs incurred in connection with the cancellation or suspension of material, equipment and labor contracts which Transmission Provider cannot reasonably avoid; provided, however, that prior to canceling or suspending any such material, equipment or labor contract, Transmission Provider shall obtain Interconnection Customer's authorization to do so. Transmission Provider shall invoice Interconnection Customer for such costs pursuant to Article 12 and shall use due diligence to minimize its costs.

In the event that Interconnection Customers suspends work by Transmission Provider required under this LGIA pursuant to this Article 5.16 and requests Transmission Provider to recommence the work required under this LGIA on or before the expiration of the three (3) years following the commencement of such suspension, then the Parties may revise Appendices A and B per Article 30.10 of this LGIA to account for revised construction sequencing and milestone dates.

In the event Interconnection Customer suspends work by Transmission Provider required under this LGIA pursuant to this Article 5.16, and has not requested Transmission

Provider to recommence the work required under this LGIA on or before the expiration of three (3) years following commencement of such suspension, this LGIA shall be deemed terminated. The three-year period shall begin on the date the suspension is requested, or the date of the written notice to Transmission Provider, if no effective date is specified.

5.17 Taxes.

5.17.1 Interconnection Customer Payments Not Taxable. The Parties intend that all payments or property transfers made by Interconnection Customer to Transmission Provider for the installation of Transmission Provider's Interconnection Facilities and the Network Upgrades shall be non-taxable, either as contributions to capital, or as an advance, in accordance with the Internal Revenue Code and any applicable state income tax laws and shall not be taxable as contributions in aid of construction or otherwise under the Internal Revenue Code and any applicable state income tax laws.

5.17.2 Representations and Covenants. In accordance with IRS Notice 2001-82 and IRS Notice 88-129, Interconnection Customer represents and covenants that (i) ownership of the electricity generated at the Large Generating Facility will pass to another party prior to the transmission of the electricity on the Transmission System, (ii) for income tax purposes, the amount of any payments and the cost of any property transferred to Transmission Provider for Transmission Provider's Interconnection Facilities will be capitalized by Interconnection Customer as an intangible asset and recovered using the straight-line method over a useful life of twenty (20) years, and (iii) any portion of Transmission Provider's Interconnection Facilities that is a "dual-use intertie," within the meaning of IRS Notice 88-129, is reasonably expected to carry only a de minimis amount of electricity in the direction of the Large Generating Facility. For this purpose, "de minimis amount" means no more than 5 percent of the total power flows in both directions, calculated in accordance with the "5 percent test" set forth in IRS Notice 88-129. This is not intended to be an exclusive list of the relevant conditions that must be met to conform to IRS requirements for non-taxable treatment.

At Transmission Provider's request, Interconnection Customer shall provide Transmission Provider with a report from an independent engineer confirming its representation in clause (iii), above. Transmission Provider represents and covenants that the cost of Transmission Provider's Interconnection Facilities paid for by Interconnection Customer will have no net effect on the base upon which rates are determined.

5.17.3 Indemnification for the Cost Consequences of Current Tax Liability Imposed Upon the Transmission Provider. Notwithstanding Article 5.17.1, Interconnection Customer shall protect, indemnify and hold harmless Transmission Provider from the cost consequences of any current tax liability

imposed against Transmission Provider as the result of payments or property transfers made by Interconnection Customer to Transmission Provider under this LGIA for Interconnection Facilities, as well as any interest and penalties, other than interest and penalties attributable to any delay caused by Transmission Provider.

Transmission Provider shall not include a gross-up for the cost consequences of any current tax liability in the amounts it charges Interconnection Customer under this LGIA unless (i) Transmission Provider has determined, in good faith, that the payments or property transfers made by Interconnection Customer to Transmission Provider should be reported as income subject to taxation or (ii) any Governmental Authority directs Transmission Provider to report payments or property as income subject to taxation; provided, however, that Transmission Provider may require Interconnection Customer to provide security for Interconnection Facilities, in a form reasonably acceptable to Transmission Provider (such as a parental guarantee or a letter of credit), in an amount equal to the cost consequences of any current tax liability under this Article 5.17. Interconnection Customer shall reimburse Transmission Provider for such costs on a fully grossed-up basis, in accordance with Article 5.17.4, within thirty (30) Calendar Days of receiving written notification from Transmission Provider of the amount due, including detail about how the amount was calculated.

The indemnification obligation shall terminate at the earlier of (1) the expiration of the ten year testing period and the applicable statute of limitation, as it may be extended by Transmission Provider upon request of the IRS, to keep these years open for audit or adjustment, or (2) the occurrence of a subsequent taxable event and the payment of any related indemnification obligations as contemplated by this Article 5.17.

5.17.4 Tax Gross-Up Amount. Interconnection Customer's liability for the cost consequences of any current tax liability under this Article 5.17 shall be calculated on a fully grossed-up basis. Except as may otherwise be agreed to by the parties, this means that Interconnection Customer will pay Transmission Provider, in addition to the amount paid for the Interconnection Facilities and Network Upgrades, an amount equal to (1) the current taxes imposed on Transmission Provider ("Current Taxes") on the excess of (a) the gross income realized by Transmission Provider as a result of payments or property transfers made by Interconnection Customer to Transmission Provider under this LGIA (without regard to any payments under this Article 5.17) (the "Gross Income Amount") over (b) the present value of future tax deductions for depreciation that will be available as a result of such payments or property transfers (the "Present Value Depreciation Amount"), plus (2) an additional amount sufficient to permit Transmission Provider to receive and retain, after the payment of all Current Taxes, an amount equal to the net amount described in clause (1).

For this purpose, (i) Current Taxes shall be computed based on Transmission Provider's composite federal and state tax rates at the time the payments or property transfers are received and Transmission Provider will be treated as being subject to tax at the highest marginal rates in effect at that time (the "Current Tax Rate"), and (ii) the Present Value Depreciation Amount shall be computed by discounting Transmission Provider's anticipated tax depreciation deductions as a result of such payments or property transfers by Transmission Provider's current weighted average cost of capital. Thus, the formula for calculating Interconnection Customer's liability to Transmission Owner pursuant to this Article 5.17.4 can be expressed as follows: (Current Tax Rate x (Gross Income Amount – Present Value of Tax Depreciation))/(1-Current Tax Rate). Interconnection Customer's estimated tax liability in the event taxes are imposed shall be stated in Appendix A, Interconnection Facilities, Network Upgrades and Distribution Upgrades.

5.17.5 Private Letter Ruling or Change or Clarification of Law. At Interconnection Customer's request and expense, Transmission Provider shall file with the IRS a request for a private letter ruling as to whether any property transferred or sums paid, or to be paid, by Interconnection Customer to Transmission Provider under this LGIA are subject to federal income taxation. Interconnection Customer will prepare the initial draft of the request for a private letter ruling, and will certify under penalties of perjury that all facts represented in such request are true and accurate to the best of Interconnection Customer's knowledge. Transmission Provider and Interconnection Customer shall cooperate in good faith with respect to the submission of such request.

Transmission Provider shall keep Interconnection Customer fully informed of the status of such request for a private letter ruling and shall execute either a privacy act waiver or a limited power of attorney, in a form acceptable to the IRS, that authorizes Interconnection Customer to participate in all discussions with the IRS regarding such request for a private letter ruling. Transmission Provider shall allow Interconnection Customer to attend all meetings with IRS officials about the request and shall permit Interconnection Customer to prepare the initial drafts of any follow-up letters in connection with the request.

5.17.6 Subsequent Taxable Events. If, within 10 years from the date on which the relevant Transmission Provider's Interconnection Facilities are placed in service, (i) Interconnection Customer Breaches the covenants contained in Article 5.17.2, (ii) a "disqualification event" occurs within the meaning of IRS Notice 88-129, or (iii) this LGIA terminates and Transmission Provider retains ownership of the Interconnection Facilities and Network Upgrades, Interconnection Customer shall pay a tax gross-up for the cost consequences of any current tax liability imposed on Transmission Provider, calculated using the methodology described in Article 5.17.4 and in accordance with IRS Notice 90-60.

5.17.7 Contests. In the event any Governmental Authority determines that Transmission Provider's receipt of payments or property constitutes income that is subject to taxation, Transmission Provider shall notify Interconnection Customer, in writing, within thirty (30) Calendar Days of receiving notification of such determination by a Governmental Authority. Upon the timely written request by Interconnection Customer and at Interconnection Customer's sole expense, Transmission Provider may appeal, protest, seek abatement of, or otherwise oppose such determination. Upon Interconnection Customer's written request and sole expense, Transmission Provider may file a claim for refund with respect to any taxes paid under this Article 5.17, whether or not it has received such a determination. Transmission Provider reserves the right to make all decisions with regard to the prosecution of such appeal, protest, abatement or other contest, including the selection of counsel and compromise or settlement of the claim, but Transmission Provider shall keep Interconnection Customer informed, shall consider in good faith suggestions from Interconnection Customer about the conduct of the contest, and shall reasonably permit Interconnection Customer or an Interconnection Customer representative to attend contest proceedings.

Interconnection Customer shall pay to Transmission Provider on a periodic basis, as invoiced by Transmission Provider, Transmission Provider's documented reasonable costs of prosecuting such appeal, protest, abatement or other contest. At any time during the contest, Transmission Provider may agree to a settlement either with Interconnection Customer's consent or after obtaining written advice from nationally-recognized tax counsel, selected by Transmission Provider, but reasonably acceptable to Interconnection Customer, that the proposed settlement represents a reasonable settlement given the hazards of litigation. Interconnection Customer's obligation shall be based on the amount of the settlement agreed to by Interconnection Customer, or if a higher amount, so much of the settlement that is supported by the written advice from nationally-recognized tax counsel selected under the terms of the preceding sentence. The settlement amount shall be calculated on a fully grossed-up basis to cover any related cost consequences of the current tax liability. Any settlement without Interconnection Customer's consent or such written advice will relieve Interconnection Customer from any obligation to indemnify Transmission Provider for the tax at issue in the contest.

5.17.8 Refund. In the event that (a) a private letter ruling is issued to Transmission Provider which holds that any amount paid or the value of any property transferred by Interconnection Customer to Transmission Provider under the terms of this LGIA is not subject to federal income taxation, (b) any legislative change or administrative announcement, notice, ruling or other determination makes it reasonably clear to Transmission Provider in good faith that any amount paid or the value of any property transferred by Interconnection Customer to Transmission Provider under the terms of this LGIA is not taxable to Transmission Provider, (c) any abatement, appeal, protest, or other contest results in a determination that any payments or transfers made by Interconnection Customer to Transmission Provider are not subject to federal income tax, or (d) if

Transmission Provider receives a refund from any taxing authority for any overpayment of tax attributable to any payment or property transfer made by Interconnection Customer to Transmission Provider pursuant to this LGIA, Transmission Provider shall promptly refund to Interconnection Customer the following:

(i) any payment made by Interconnection Customer under this Article 5.17 for taxes that is attributable to the amount determined to be non-taxable, together with interest thereon,

(ii) interest on any amount paid by Interconnection Customer to Transmission Provider for such taxes which Transmission Provider did not submit to the taxing authority, calculated in accordance with the methodology set forth in FERC's regulations at 18 CFR § 35.19a(a)(2)(iii) from the date payment was made by Interconnection Customer to the date Transmission Provider refunds such payment to Interconnection Customer, and

(iii) with respect to any such taxes paid by Transmission Provider, any refund or credit Transmission Provider receives or to which it may be entitled from any Governmental Authority, interest (or that portion thereof attributable to the payment described in clause (i), above) owed to Transmission Provider for such overpayment of taxes (including any reduction in interest otherwise payable by Transmission Provider to any Governmental Authority resulting from an offset or credit); provided, however, that Transmission Provider will remit such amount promptly to Interconnection Customer only after and to the extent that Transmission Provider has received a tax refund, credit or offset from any Governmental Authority for any applicable overpayment of income tax related to Transmission Provider's Interconnection Facilities.

The intent of this provision is to leave the Parties, to the extent practicable, in the event that no taxes are due with respect to any payment for Interconnection Facilities and Network Upgrades hereunder, in the same position they would have been in had no such tax payments been made.

5.17.9 Taxes Other Than Income Taxes. Upon the timely request by Interconnection Customer, and at Interconnection Customer's sole expense, Transmission Provider may appeal, protest, seek abatement of, or otherwise contest any tax (other than federal or state income tax) asserted or assessed against Transmission Provider for which Interconnection Customer may be required to reimburse Transmission Provider under the terms of this LGIA. Interconnection Customer shall pay to Transmission Provider on a periodic basis, as invoiced by Transmission Provider, Transmission Provider's documented reasonable costs of prosecuting such appeal, protest, abatement, or other contest. Interconnection Customer and Transmission Provider shall cooperate in good faith with respect to any such contest. Unless

the payment of such taxes is a prerequisite to an appeal or abatement or cannot be deferred, no amount shall be payable by Interconnection Customer to Transmission Provider for such taxes until they are assessed by a final, non-appealable order by any court or agency of competent jurisdiction. In the event that a tax payment is withheld and ultimately due and payable after appeal, Interconnection Customer will be responsible for all taxes, interest and penalties, other than penalties attributable to any delay caused by Transmission Provider.

5.17.10 Transmission Owners Who Are Not Transmission Providers. If Transmission Provider is not the same entity as the Transmission Owner, then (i) all references in this Article 5.17 to Transmission Provider shall be deemed also to refer to and to include the Transmission Owner, as appropriate, and (ii) this LGIA shall not become effective until such Transmission Owner shall have agreed in writing to assume all of the duties and obligations of Transmission Provider under this Article 5.17 of this LGIA.

5.18 Tax Status. Each Party shall cooperate with the other to maintain the other Party's tax status. Nothing in this LGIA is intended to adversely affect any Transmission Provider's tax exempt status with respect to the issuance of bonds including, but not limited to, Local Furnishing Bonds.

5.19 Modification.

5.19.1 General. Either Party may undertake modifications to its facilities. If a Party plans to undertake a modification that reasonably may be expected to affect the other Party's facilities, that Party shall provide to the other Party sufficient information regarding such modification so that the other Party may evaluate the potential impact of such modification prior to commencement of the work. Such information shall be deemed to be confidential hereunder and shall include information concerning the timing of such modifications and whether such modifications are expected to interrupt the flow of electricity from the Large Generating Facility. The Party desiring to perform such work shall provide the relevant drawings, plans, and specifications to the other Party at least ninety (90) Calendar Days in advance of the commencement of the work or such shorter period upon which the Parties may agree, which agreement shall not unreasonably be withheld, conditioned or delayed.

In the case of Large Generating Facility modifications that do not require Interconnection Customer to submit an Interconnection Request or a proposed modification to an Existing Generating Facility that is not a Material Modification, Transmission Provider shall provide, within thirty (30) Calendar Days (or such other time as the Parties may agree), an estimate of any additional modifications to the Transmission System, Transmission Provider's Interconnection Facilities or Network Upgrades necessitated by such Interconnection Customer modification and a good faith estimate of the costs thereof.

5.19.2 Standards. Any additions, modifications, or replacements made to a Party's facilities shall be designed, constructed and operated in accordance with this LGIA and Good Utility Practice.

5.19.3 Modification Costs. Interconnection Customer shall not be directly assigned for the costs of any additions, modifications, or replacements that Transmission Provider makes to Transmission Provider's Interconnection Facilities or the Transmission System to facilitate the interconnection of a third party to Transmission Provider's Interconnection Facilities or the Transmission System, or to provide transmission service to a third party under Transmission Provider's Tariff. Interconnection Customer shall be responsible for the costs of any additions, modifications, or replacements to Interconnection Customer's Interconnection Facilities that may be necessary to maintain or upgrade such Interconnection Customer's Interconnection Facilities consistent with Applicable Laws and Regulations, Applicable Reliability Standards or Good Utility Practice.

Article 6. Testing and Inspection

6.1 Pre-Commercial Operation Date Testing and Modifications. Prior to the Commercial Operation Date, Transmission Provider shall test Transmission Provider's Interconnection Facilities and Network Upgrades and Interconnection Customer shall test the Large Generating Facility and Interconnection Customer's Interconnection Facilities to ensure their safe and reliable operation. Similar testing may be required after initial operation. Each Party shall make any modifications to its facilities that are found to be necessary as a result of such testing. Interconnection Customer shall bear the cost of all such testing and modifications. Interconnection Customer shall generate test energy at the Large Generating Facility only if it has arranged for the delivery of such test energy.

6.2 Post-Commercial Operation Date Testing and Modifications. Each Party shall at its own expense perform routine inspection and testing of its facilities and equipment in accordance with Good Utility Practice as may be necessary to ensure the continued interconnection of the Large Generating Facility with the Transmission System in a safe and reliable manner. Each Party shall have the right, upon advance written notice, to require reasonable additional testing of the other Party's facilities, at the requesting Party's expense, as may be in accordance with Good Utility Practice.

6.3 Right to Observe Testing. Each Party shall notify the other Party in advance of its performance of tests of its Interconnection Facilities. The other Party has the right, at its own expense, to observe such testing.

6.4 Right to Inspect. Each Party shall have the right, but shall have no obligation to: (i)observe the other Party's tests and/or inspection of any of its System Protection Facilities and other protective equipment, including Power System Stabilizers; (ii) review the settings of the other Party's System Protection Facilities and other protective

equipment; and (iii) review the other Party's maintenance records relative to the Interconnection Facilities, the System Protection Facilities and other protective equipment. A Party may exercise these rights from time to time as it deems necessary upon reasonable notice to the other Party. The exercise or non-exercise by a Party of any such rights shall not be construed as an endorsement or confirmation of any element or condition of the Interconnection Facilities or the System Protection Facilities or other protective equipment or the operation thereof, or as a warranty as to the fitness, safety, desirability, or reliability of same. Any information that a Party obtains through the exercise of any of its rights under this Article 6.4 shall be deemed to be Confidential Information and treated pursuant to Article 22 of this LGIA.

Article 7. Metering

7.1 General. Each Party shall comply with the Applicable Reliability Council requirements. Unless otherwise agreed by the Parties, Transmission Provider shall install Metering Equipment at the Point of Interconnection prior to any operation of the Large Generating Facility and shall own, operate, test and maintain such Metering Equipment. Power flows to and from the Large Generating Facility shall be measured at or, at Transmission Provider's option, compensated to, the Point of Interconnection. Transmission Provider shall provide metering quantities, in analog and/or digital form, to Interconnection Customer upon request. Interconnection Customer shall bear all reasonable documented costs associated with the purchase, installation, operation, testing and maintenance of the Metering Equipment.

7.2 Check Meters. Interconnection Customer, at its option and expense, may install and operate, on its premises and on its side of the Point of Interconnection, one or more check meters to check Transmission Provider's meters. Such check meters shall be for check purposes only and shall not be used for the measurement of power flows for purposes of this LGIA, except as provided in Article 7.4 below. The check meters shall be subject at all reasonable times to inspection and examination by Transmission Provider or its designee. The installation, operation and maintenance thereof shall be performed entirely by Interconnection Customer in accordance with Good Utility Practice.

7.3 Standards. Transmission Provider shall install, calibrate, and test revenue quality Metering Equipment in accordance with applicable ANSI standards.

7.4 Testing of Metering Equipment. Transmission Provider shall inspect and test all Transmission Provider-owned Metering Equipment upon installation and at least once every two (2) years thereafter. If requested to do so by Interconnection Customer, Transmission Provider shall, at Interconnection Customer's expense, inspect or test Metering Equipment more frequently than every two (2) years. Transmission Provider shall give reasonable notice of the time when any inspection or test shall take place, and Interconnection Customer may have representatives present at the test or inspection. If at any time Metering Equipment is found to be inaccurate or defective, it shall be adjusted, repaired or replaced at Interconnection Customer's expense, in order to provide accurate

metering, unless the inaccuracy or defect is due to Transmission Provider's failure to maintain, then Transmission Provider shall pay. If Metering Equipment fails to register, or if the measurement made by Metering Equipment during a test varies by more than two percent from the measurement made by the standard meter used in the test, Transmission Provider shall adjust the measurements by correcting all measurements for the period during which Metering Equipment was in error by using Interconnection Customer's check meters, if installed. If no such check meters are installed or if the period cannot be reasonably ascertained, the adjustment shall be for the period immediately preceding the test of the Metering Equipment equal to one-half the time from the date of the last previous test of the Metering Equipment.

7.5 Metering Data. At Interconnection Customer's expense, the metered data shall be telemetered to one or more locations designated by Transmission Provider and one or more locations designated by Interconnection Customer. Such telemetered data shall be used, under normal operating conditions, as the official measurement of the amount of energy delivered from the Large Generating Facility to the Point of Interconnection.

Article 8. Communications

8.1 Interconnection Customer Obligations. Interconnection Customer shall maintain satisfactory operating communications with Transmission Provider's Transmission System dispatcher or representative designated by Transmission Provider. Interconnection Customer shall provide standard voice line, dedicated voice line and facsimile communications at its Large Generating Facility control room or central dispatch facility through use of either the public telephone system, or a voice communications system that does not rely on the public telephone system. Interconnection Customer shall also provide the dedicated data circuit(s) necessary to provide Interconnection Customer data to Transmission Provider as set forth in Appendix D, Security Arrangements Details. The data circuit(s) shall extend from the Large Generating Facility to the location(s) specified by Transmission Provider. Any required maintenance of such communications equipment shall be performed by Interconnection Customer. Operational communications shall be activated and maintained under, but not be limited to, the following events: system paralleling or separation, scheduled and unscheduled shutdowns, equipment clearances, and hourly and daily load data.

8.2 Remote Terminal Unit. Prior to the Initial Synchronization Date of the Large Generating Facility, a Remote Terminal Unit, or equivalent data collection and transfer equipment acceptable to the Parties, shall be installed by Interconnection Customer, or by Transmission Provider at Interconnection Customer's expense, to gather accumulated and instantaneous data to be telemetered to the location(s) designated by Transmission Provider through use of a dedicated point-to-point data circuit(s) as indicated in Article 8.1. The communication protocol for the data circuit(s) shall be specified by Transmission Provider. Instantaneous bi-directional analog real power and reactive

power flow information must be telemetered directly to the location(s) specified by Transmission Provider.

Each Party will promptly advise the other Party if it detects or otherwise learns of any metering, telemetry or communications equipment errors or malfunctions that require the attention and/or correction by the other Party. The Party owning such equipment shall correct such error or malfunction as soon as reasonably feasible.

8.3 No Annexation. Any and all equipment placed on the premises of a Party shall be and remain the property of the Party providing such equipment regardless of the mode and manner of annexation or attachment to real property, unless otherwise mutually agreed by the Parties.

8.4 Provision of Data from a Variable Energy Resource. The Interconnection Customer whose Generating Facility is a Variable Energy Resource shall provide meteorological and forced outage data to the Transmission Provider to the extent necessary for the Transmission Provider's development and deployment of power production forecasts for that class of Variable Energy Resources. The Interconnection Customer with a Variable Energy Resource having wind as the energy source, at a minimum, will be required to provide the Transmission Provider with site-specific meteorological data including: temperature, wind speed, wind direction, and atmospheric pressure. The Interconnection Customer with a Variable Energy Resource having solar as the energy source, at a minimum, will be required to provide the Transmission Provider with site-specific meteorological data including: temperature, atmospheric pressure, and irradiance. The Transmission Provider and Interconnection Customer whose Generating Facility is a Variable Energy Resource shall mutually agree to any additional meteorological data that are required for the development and deployment of a power production forecast. The Interconnection Customer whose Generating Facility is a Variable Energy Resource also shall submit data to the Transmission Provider regarding all forced outages to the extent necessary for the Transmission Provider's development and deployment of power production forecasts for that class of Variable Energy Resources. The exact specifications of the meteorological and forced outage data to be provided by the Interconnection Customer to the Transmission Provider, including the frequency and timing of data submittals, shall be made taking into account the size and configuration of the Variable Energy Resource, its characteristics, location, and its importance in maintaining generation resource adequacy and transmission system reliability in its area. All requirements for meteorological and forced outage data must be commensurate with the power production forecasting employed by the Transmission Provider. Such requirements for meteorological and forced outage data are set forth in Appendix C, Interconnection Details, of this LGIA, as they may change from time to time.

Article 9. Operations

9.1 General. Each Party shall comply with the Applicable Reliability Council requirements. Each Party shall provide to the other Party all information that may reasonably be

required by the other Party to comply with Applicable Laws and Regulations and Applicable Reliability Standards.

9.2 Control Area Notification. At least three months before Initial Synchronization Date, Interconnection Customer shall notify Transmission Provider in writing of the Control Area in which the Large Generating Facility will be located. If Interconnection Customer elects to locate the Large Generating Facility in a Control Area other than the Control Area in which the Large Generating Facility is physically located, and if permitted to do so by the relevant transmission tariffs, all necessary arrangements, including but not limited to those set forth in Article 7 and Article 8 of this LGIA, and remote Control Area generator interchange agreements, if applicable, and the appropriate measures under such agreements, shall be executed and implemented prior to the placement of the Large Generating Facility in the other Control Area.

9.3 Transmission Provider Obligations. Transmission Provider shall cause the Transmission System and Transmission Provider's Interconnection Facilities to be operated, maintained and controlled in a safe and reliable manner and in accordance with this LGIA. Transmission Provider may provide operating instructions to Interconnection Customer consistent with this LGIA and Transmission Provider's operating protocols and procedures as they may change from time to time. Transmission Provider will consider changes to its operating protocols and procedures proposed by Interconnection Customer.

9.4 Interconnection Customer Obligations. Interconnection Customer shall at its own expense operate, maintain and control the Large Generating Facility and Interconnection Customer's Interconnection Facilities in a safe and reliable manner and in accordance with this LGIA. Interconnection Customer shall operate the Large Generating Facility and Interconnection Customer's Interconnection Facilities in accordance with all applicable requirements of the Control Area of which it is part, as such requirements are set forth in Appendix C, Interconnection Details, of this LGIA. Appendix C, Interconnection Details, will be modified to reflect changes to the requirements as they may change from time to time. Either Party may request that the other Party provide copies of the requirements set forth in Appendix C, Interconnection Details, of this LGIA.

9.5 Start-Up and Synchronization. Consistent with the Parties' mutually acceptable procedures, Interconnection Customer is responsible for the proper synchronization of the Large Generating Facility to Transmission Provider's Transmission System.

9.6 Reactive Power and Primary Frequency Response

9.6.1 Power Factor Design Criteria.

9.6.1.1 Synchronous Generation. Interconnection Customer shall design the Large Generating Facility to maintain a composite power delivery at continuous rated power output at the Point of Interconnection at a power factor within the range of 0.95 leading

to 0.95 lagging, unless the Transmission Provider has established different requirements that apply to all synchronous generators in the Control Area on a comparable basis.

9.6.1.2 Non-Synchronous Generation. Interconnection Customer shall design the Large Generating Facility to maintain a composite power delivery at continuous rated power output at the high-side of the generator substation at a power factor within the range of 0.95 leading to 0.95 lagging, unless the Transmission Provider has established a different power factor range that applies to all non-synchronous generators in the Control Area on a comparable basis. This power factor range standard shall be dynamic and can be met using, for example, power electronics designed to supply this level of reactive capability (taking into account any limitations due to voltage level, real power output, etc.) or fixed and switched capacitors, or a combination of the two. This requirement shall only apply to newly interconnecting non-synchronous generators that have not yet executed a Facilities Study Agreement as of the effective date of the Final Rule establishing this requirement (Order No. 827).

9.6.2 Voltage Schedules. Once Interconnection Customer has synchronized the Large Generating Facility with the Transmission System, Transmission Provider shall require Interconnection Customer to operate the Large Generating Facility to produce or absorb reactive power within the design limitations of the Large Generating Facility set forth in Article 9.6.1 (Power Factor Design Criteria). Transmission Provider's voltage schedules shall treat all sources of reactive power in the Control Area in an equitable and not unduly discriminatory manner. Transmission Provider shall exercise Reasonable Efforts to provide Interconnection Customer with such schedules at least one (1) day in advance, and may make changes to such schedules as necessary to maintain the reliability of the Transmission System. Interconnection Customer shall operate the Large Generating Facility to maintain the specified output voltage or power factor at the Point of Interconnection within the design limitations of the Large Generating Facility set forth in Article 9.6.1 (Power Factor Design Criteria). If Interconnection Customer is unable to maintain the specified voltage or power factor, it shall promptly notify the System Operator.

9.6.2.1 Voltage Regulators. Whenever the Large Generating Facility is operated in parallel with the Transmission System and voltage regulators are capable of operation, Interconnection Customer shall operate the Large Generating Facility with its voltage regulators in automatic operation. If the Large Generating Facility's voltage regulators are not capable of such automatic operation, Interconnection Customer shall immediately notify Transmission Provider's system operator, or its designated representative, and ensure that such Large Generating Facility's reactive power

production or absorption (measured in MVARs) are within the design capability of the Large Generating Facility's generating unit(s) and steady state stability limits. Interconnection Customer shall not cause its Large Generating Facility to disconnect automatically or instantaneously from the Transmission System or trip any generating unit comprising the Large Generating Facility for an under or over frequency condition unless the abnormal frequency condition persists for a time period beyond the limits set forth in ANSI/IEEE Standard C37.106, or such other standard as applied to other generators in the Control Area on a comparable basis.

9.6.3 Payment for Reactive Power. Transmission Provider is required to pay Interconnection Customer for reactive power that Interconnection Customer provides or absorbs from the Large Generating Facility when Transmission Provider requests Interconnection Customer to operate its Large Generating Facility outside the range specified in Article 9.6.1, provided that if Transmission Provider pays its own or affiliated generators for reactive power service within the specified range, it must also pay Interconnection Customer. Payments shall be pursuant to Article 11.6 or such other agreement to which the Parties have otherwise agreed.

9.6.4 Primary Frequency Response. Interconnection Customer shall ensure the primary frequency response capability of its Large Generating Facility by installing, maintaining, and operating a functioning governor or equivalent controls. The term "functioning governor or equivalent controls" as used herein shall mean the required hardware and/or software that provides frequency responsive real power control with the ability to sense changes in system frequency and autonomously adjust the Large Generating Facility's real power output in accordance with the droop and deadband parameters and in the direction needed to correct frequency deviations. Interconnection Customer is required to install a governor or equivalent controls with the capability of operating: (1) with a maximum 5 percent droop and ±0.036 Hz deadband; or (2) in accordance with the relevant droop, deadband, and timely and sustained response settings from an approved NERC Reliability Standard providing for equivalent or more stringent parameters. The droop characteristic shall be: (1) based on the nameplate capacity of the Large Generating Facility, and shall be linear in the range of frequencies between 59 to 61 Hz that are outside of the deadband parameter; or (2) based on an approved NERC Reliability Standard providing for an equivalent or more stringent parameter. The deadband parameter shall be: the range of frequencies above and below nominal (60 Hz) in which the governor or equivalent controls is not expected to adjust the Large Generating Facility's real power output in response to frequency deviations. The deadband shall be implemented: (1) without a step to the droop curve, that is, once the frequency deviation exceeds the deadband parameter, the expected change in the Large Generating Facility's real power output in response to frequency deviations shall

start from zero and then increase (for under-frequency deviations) or decrease (for over-frequency deviations) linearly in proportion to the magnitude of the frequency deviation; or (2) in accordance with an approved NERC Reliability Standard providing for an equivalent or more stringent parameter. Interconnection Customer shall notify Transmission Provider that the primary frequency response capability of the Large Generating Facility has been tested and confirmed during commissioning. Once Interconnection Customer has synchronized the Large Generating Facility with the Transmission System, Interconnection Customer shall operate the Large Generating Facility consistent with the provisions specified in Articles 9.6.4.1 and 9.6.4.2 of this Agreement. The primary frequency response requirements contained herein shall apply to both synchronous and non-synchronous Large Generating Facilities.

9.6.4.1 **Governor or Equivalent Controls.** Whenever the Large Generating Facility in operated in parallel with the Transmission System, Interconnection Customer shall operate the Large Generating Facility with its governor or equivalent controls in service and responsive to frequency. Interconnection Customer shall: (1) in coordination with the Transmission Provider and/or the relevant balancing authority, set the deadband parameter to: (1) a maximum of ±0.036 Hz and set the droop parameter to a maximum of 5 percent; or (2) implement the relevant droop and deadband settings from an approved NERC Reliability Standard that provides for equivalent or more stringent parameters. Interconnection Customer shall be required to provide the status and settings of the governor or equivalent control to Transmission Provider and/or the relevant balancing authority upon request. If the Interconnection Customer needs to operate the Large Generating Facility with its governor or equivalent controls not in service, Interconnection Customer shall immediately notify Transmission Provider and the relevant balancing authority, and provide both with the following information: (1) the operating status of the governor or equivalent controls (i.e., whether it is currently out of service or when it will be taken out of service); (2) the reasons for removing the governor or equivalent controls will be returned to service; and (3) a reasonable estimate of when the governor or equivalent controls will be returned to service. Interconnection Customer shall make Reasonable Efforts to return its governor or equivalent controls into service as soon as practicable. Interconnection Customer shall make Reasonable Efforts to keep outages of the Large Generating Facility's governor or equivalent controls to minimum whenever the Large Generating Facility is operated in parallel with the Transmission System.

9.6.4.2 **Timely and Sustained Response.** Interconnection Customer shall ensure that the Large Generating Facility's real power response to

sustained frequency deviations outside of the deadband setting is automatically provided and shall begin immediately after frequency deviates outside of the deadband, and to the extent the Large Generating Facility has operating capability in the direction needed to correct the frequency deviation. Interconnection Customer shall not block or otherwise inhibit the ability of the governor or equivalent controls to respond and shall ensure that the response is not inhibited, except under certain operational constraints including, but not limited to, ambient temperature limitations, physical energy limitations, outages of mechanical equipment, or regulatory requirements. The Large Generating Facility shall sustain the real power response at least until system frequency returns to a value within the deadband setting of the governor or equivalent controls. A Commission-approved Reliability Standard with equivalent or more stringent requirements shall supersede the above requirements.

9.6.4.3 **Exemptions.** Large Generating Facilities that are regulated by the United States Nuclear Regulatory Commission shall be exempt from Articles 9.6.4, 9.6.4.1, and 9.6.4.2 of this Agreement. Large Generating Facilities that are behind the meter generation that is sized-to-load (i.e., the thermal load and the generation are near-balanced in real-time operation and the generation is primarily controlled to maintain the unique thermal, chemical, or mechanical output necessary for the operating requirements of its host facility) shall be required to install primary frequency response capability in accordance with the droop and deadband capability requirements specified in Article 9.6.4, but shall be otherwise exempt from the operating requirements in Articles 9.6.4, 9.6.4.1, 9.6.4.2, and 9.6.4.4 of this Agreement.

9.6.4.4 **Electric Storage Resources.** Interconnection Customer interconnecting an electric storage resource shall establish an operating range in Appendix C of its LGIA that specifies a minimum state of charge and a maximum state of charge between which the electric storage resource will be required to provide primary frequency response consistent with the conditions set forth in Articles 9.6.4, 9.6.4.1, 9.6.4.2 and 9.6.4.3 of this Agreement. Appendix C shall specify whether the operating range is static or dynamic, and shall consider (1) the expected magnitude of frequency deviations in the interconnection; (2) the expected duration that system frequency will remain outside of the deadband parameter in the interconnection; (3) the expected incidence of frequency deviations outside of the deadband parameter in the interconnection; (4) the physical capabilities of the electric storage resource; (5) operational limitations of the electric storage resource

due to manufacturer specifications; and (6) any other relevant factors agreed to by Transmission Provider and Interconnection Customer, and in consultation with the relevant transmission owner or balancing authority as appropriate. If the operating range is dynamic, then Appendix C must establish how frequently the operating range will be reevaluated and the factors that may be considered during its reevaluation.

Interconnection Customer's electric storage resource is required to provide timely and sustained primary frequency response consistent with Article 9.6.4.2 of this Agreement when it is online and dispatched to inject electricity to the Transmission System and/or receive electricity from the Transmission System. This excludes circumstances when the electric storage resource is not dispatched to inject electricity to the Transmission System and/or dispatched to receive electricity from the Transmission System. If Interconnection Customer's electric storage resource is charging at the time of a frequency deviation outside of its deadband parameter, it is to increase (for over-frequency deviations) or decrease (for under-frequency deviations) the rate at which it is charging in accordance with its droop parameter. Interconnection Customer's electric storage resource is not required to change from charging to discharging, or vice versa, unless the response necessitated by the droop and deadband settings requires it to do so and it is technically capable of making such a transition.

9.7 Outages and Interruptions.

9.7.1 Outages.

9.7.1.1 Outage Authority and Coordination. Each Party may in accordance with Good Utility Practice in coordination with the other Party remove from service any of its respective Interconnection Facilities or Network Upgrades that may impact the other Party's facilities as necessary to perform maintenance or testing or to install or replace equipment. Absent an Emergency Condition, the Party scheduling a removal of such facility(ies) from service will use Reasonable Efforts to schedule such removal on a date and time mutually acceptable to the Parties. In all circumstances, any Party planning to remove such facility(ies) from service shall use Reasonable Efforts to minimize the effect on the other Party of such removal.

9.7.1.2 Outage Schedules. Transmission Provider shall post scheduled outages of its transmission facilities on the OASIS. Interconnection Customer shall submit its planned maintenance

schedules for the Large Generating Facility to Transmission Provider for a minimum of a rolling twenty-four month period. Interconnection Customer shall update its planned maintenance schedules as necessary. Transmission Provider may request Interconnection Customer to reschedule its maintenance as necessary to maintain the reliability of the Transmission System; provided, however, adequacy of generation supply shall not be a criterion in determining Transmission System reliability. Transmission Provider shall compensate Interconnection Customer for any additional direct costs that Interconnection Customer incurs as a result of having to reschedule maintenance, including any additional overtime, breaking of maintenance contracts or other costs above and beyond the cost Interconnection Customer would have incurred absent Transmission Provider's request to reschedule maintenance. Interconnection Customer will not be eligible to receive compensation, if during the twelve (12) months prior to the date of the scheduled maintenance, Interconnection Customer had modified its schedule of maintenance activities.

9.7.1.3 **Outage Restoration.** If an outage on a Party's Interconnection Facilities or Network Upgrades adversely affects the other Party's operations or facilities, the Party that owns or controls the facility that is out of service shall use Reasonable Efforts to promptly restore such facility(ies) to a normal operating condition consistent with the nature of the outage. The Party that owns or controls the facility that is out of service shall provide the other Party, to the extent such information is known, information on the nature of the Emergency Condition, an estimated time of restoration, and any corrective actions required. Initial verbal notice shall be followed up as soon as practicable with written notice explaining the nature of the outage.

9.7.2 **Interruption of Service.** If required by Good Utility Practice to do so, Transmission Provider may require Interconnection Customer to interrupt or reduce deliveries of electricity if such delivery of electricity could adversely affect Transmission Provider's ability to perform such activities as are necessary to safely and reliably operate and maintain the Transmission System. The following provisions shall apply to any interruption or reduction permitted under this Article 9.7.2:

9.7.2.1 The interruption or reduction shall continue only for so long as reasonably necessary under Good Utility Practice;

9.7.2.2 Any such interruption or reduction shall be made on an equitable, non-discriminatory basis with respect to all generating facilities directly connected to the Transmission System;

9.7.2.3 When the interruption or reduction must be made under circumstances which do not allow for advance notice, Transmission Provider shall notify Interconnection Customer by telephone as soon as practicable of the reasons for the curtailment, interruption, or reduction, and, if known, its expected duration. Telephone notification shall be followed by written notification as soon as practicable;

9.7.2.4 Except during the existence of an Emergency Condition, when the interruption or reduction can be scheduled without advance notice, Transmission Provider shall notify Interconnection Customer in advance regarding the timing of such scheduling and further notify Interconnection Customer of the expected duration. Transmission Provider shall coordinate with Interconnection Customer using Good Utility Practice to schedule the interruption or reduction during periods of least impact to Interconnection Customer and Transmission Provider; and

9.7.2.5 The Parties shall cooperate and coordinate with each other to the extent necessary in order to restore the Large Generating Facility, Interconnection Facilities, and the Transmission System to their normal operating state, consistent with system conditions and Good Utility Practice.

9.7.3 Under-Frequency and Over Frequency Conditions. The Transmission System is designed to automatically activate a load-shed program as required by the Applicable Reliability Council in the event of an under-frequency system disturbance. Interconnection Customer shall implement under-frequency and over-frequency relay set points for the Large Generating Facility as required by the Applicable Reliability Council to ensure "ride through" capability of the Transmission System. Large Generating Facility response to frequency deviations of pre-determined magnitudes, both under-frequency and over-frequency deviations, shall be studied and coordinated with Transmission Provider in accordance with Good Utility Practice. The term "ride through" as used herein shall mean the ability of a Generating Facility to stay connected to and synchronized with the Transmission System during system disturbances within a range of under-frequency and over-frequency conditions, in accordance with Good Utility Practice.

9.7.4 System Protection and Other Control Requirements.

9.7.4.1 System Protection Facilities. Interconnection Customer shall, at its expense, install, operate and maintain System Protection Facilities as a part of the Large Generating Facility or Interconnection Customer's Interconnection Facilities.

Transmission Provider shall install at Interconnection Customer's expense any System Protection Facilities that may be required on Transmission Provider's Interconnection Facilities or the Transmission System as a result of the interconnection of the Large Generating Facility and Interconnection Customer's Interconnection Facilities.

9.7.4.2 Each Party's protection facilities shall be designed and coordinated with other systems in accordance with Good Utility Practice.

9.7.4.3 Each Party shall be responsible for protection of its facilities consistent with Good Utility Practice.

9.7.4.4 Each Party's protective relay design shall incorporate the necessary test switches to perform the tests required in Article 6. The required test switches will be placed such that they allow operation of lockout relays while preventing breaker failure schemes from operating and causing unnecessary breaker operations and/or the tripping of Interconnection Customer's units.

9.7.4.5 Each Party will test, operate and maintain System Protection Facilities in accordance with Good Utility Practice.

9.7.4.6 Prior to the In-Service Date, and again prior to the Commercial Operation Date, each Party or its agent shall perform a complete calibration test and functional trip test of the System Protection Facilities. At intervals suggested by Good Utility Practice and following any apparent malfunction of the System Protection Facilities, each Party shall perform both calibration and functional trip tests of its System Protection Facilities. These tests do not require the tripping of any in-service generation unit. These tests do, however, require that all protective relays and lockout contacts be activated.

9.7.5 Requirements for Protection. In compliance with Good Utility Practice, Interconnection Customer shall provide, install, own, and maintain relays, circuit breakers and all other devices necessary to remove any fault contribution of the Large Generating Facility to any short circuit occurring on the Transmission System not otherwise isolated by Transmission Provider's equipment, such that the removal of the fault contribution shall be coordinated with the protective requirements of the Transmission System. Such protective equipment shall include, without limitation, a disconnecting device or switch with load-interrupting capability located between the Large Generating Facility and the Transmission System at a site selected upon mutual agreement (not to be unreasonably withheld, conditioned or delayed) of the Parties. Interconnection Customer shall be responsible for protection of the Large Generating Facility and

Interconnection Customer's other equipment from such conditions as negative sequence currents, over- or under-frequency, sudden load rejection, over- or under-voltage, and generator loss-of-field. Interconnection Customer shall be solely responsible to disconnect the Large Generating Facility and Interconnection Customer's other equipment if conditions on the Transmission System could adversely affect the Large Generating Facility.

9.7.6 Power Quality. Neither Party's facilities shall cause excessive voltage flicker nor introduce excessive distortion to the sinusoidal voltage or current waves as defined by ANSI Standard C84.1-1989, in accordance with IEEE Standard 519, or any applicable superseding electric industry standard. In the event of a conflict between ANSI Standard C84.1-1989, or any applicable superseding electric industry standard, ANSI Standard C84.1-1989, or the applicable superseding electric industry standard, shall control.

9.8 Switching and Tagging Rules. Each Party shall provide the other Party a copy of its switching and tagging rules that are applicable to the other Party's activities. Such switching and tagging rules shall be developed on a non-discriminatory basis. The Parties shall comply with applicable switching and tagging rules, as amended from time to time, in obtaining clearances for work or for switching operations on equipment.

9.9 Use of Interconnection Facilities by Third Parties.

9.9.1 Purpose of Interconnection Facilities. Except as may be required by Applicable Laws and Regulations, or as otherwise agreed to among the Parties, the Interconnection Facilities shall be constructed for the sole purpose of interconnecting the Large Generating Facility to the Transmission System and shall be used for no other purpose.

9.9.2 Third Party Users. If required by Applicable Laws and Regulations or if the Parties mutually agree, such agreement not to be unreasonably withheld, to allow one or more third parties to use Transmission Provider's Interconnection Facilities, or any part thereof, Interconnection Customer will be entitled to compensation for the capital expenses it incurred in connection with the Interconnection Facilities based upon the pro rata use of the Interconnection Facilities by Transmission Provider, all third party users, and Interconnection Customer, in accordance with Applicable Laws and Regulations or upon some other mutually-agreed upon methodology. In addition, cost responsibility for ongoing costs, including operation and maintenance costs associated with the Interconnection Facilities, will be allocated between Interconnection Customer and any third party users based upon the pro rata use of the Interconnection Facilities by Transmission Provider, all third party users, and Interconnection Customer, in accordance with Applicable Laws and Regulations or upon some other mutually agreed upon methodology. If the issue of such compensation or allocation cannot be resolved through such negotiations, it shall be submitted to FERC for resolution.

9.10 Disturbance Analysis Data Exchange. The Parties will cooperate with one another in the analysis of disturbances to either the Large Generating Facility or Transmission Provider's Transmission System by gathering and providing access to any information relating to any disturbance, including information from oscillography, protective relay targets, breaker operations and sequence of events records, and any disturbance information required by Good Utility Practice.

Article 10. Maintenance

10.1 Transmission Provider Obligations. Transmission Provider shall maintain the Transmission System and Transmission Provider's Interconnection Facilities in a safe and reliable manner and in accordance with this LGIA.

10.2 Interconnection Customer Obligations. Interconnection Customer shall maintain the Large Generating Facility and Interconnection Customer's Interconnection Facilities in a safe and reliable manner and in accordance with this LGIA.

10.3 Coordination. The Parties shall confer regularly to coordinate the planning, scheduling and performance of preventive and corrective maintenance on the Large Generating Facility and the Interconnection Facilities.

10.4 Secondary Systems. Each Party shall cooperate with the other in the inspection, maintenance, and testing of control or power circuits that operate below 600 volts, AC or DC, including, but not limited to, any hardware, control or protective devices, cables, conductors, electric raceways, secondary equipment panels, transducers, batteries, chargers, and voltage and current transformers that directly affect the operation of a Party's facilities and equipment which may reasonably be expected to impact the other Party. Each Party shall provide advance notice to the other Party before undertaking any work on such circuits, especially on electrical circuits involving circuit breaker trip and close contacts, current transformers, or potential transformers.

10.5 Operating and Maintenance Expenses. Subject to the provisions herein addressing the use of facilities by others, and except for operations and maintenance expenses associated with modifications made for providing interconnection or transmission service to a third party and such third party pays for such expenses, Interconnection Customer shall be responsible for all reasonable expenses including overheads, associated with: (1) owning, operating, maintaining, repairing, and replacing Interconnection Customer's Interconnection Facilities; and (2) operation, maintenance, repair and replacement of Transmission Provider's Interconnection Facilities.

Article 11. Performance Obligation

11.1 Interconnection Customer Interconnection Facilities. Interconnection Customer shall design, procure, construct, install, own and/or control Interconnection Customer Interconnection Facilities described in Appendix A, Interconnection Facilities, Network Upgrades and Distribution Upgrades, at its sole expense.

11.2 Transmission Provider's Interconnection Facilities. Transmission Provider or Transmission Owner shall design, procure, construct, install, own and/or control the Transmission Provider's Interconnection Facilities described in Appendix A, Interconnection Facilities, Network Upgrades and Distribution Upgrades, at the sole expense of the Interconnection Customer.

11.3 Network Upgrades and Distribution Upgrades. Transmission Provider or Transmission Owner shall design, procure, construct, install, and own the Network Upgrades and Distribution Upgrades described in Appendix A, Interconnection Facilities, Network Upgrades and Distribution Upgrades. The Interconnection Customer shall be responsible for all costs related to Distribution Upgrades. Unless Transmission Provider or Transmission Owner elects to fund the capital for the Network Upgrades, they shall be solely funded by Interconnection Customer.

11.4 Transmission Credits.

11.4.1 Repayment of Amounts Advanced for Network Upgrades. Interconnection Customer shall be entitled to a cash repayment, equal to the total amount paid to Transmission Provider and Affected System Operator, if any, for the Network Upgrades, including any tax gross-up or other tax-related payments associated with Network Upgrades, and not refunded to Interconnection Customer pursuant to Article 5.17.8 or otherwise, to be paid to Interconnection Customer on a dollar-for-dollar basis for the non-usage sensitive portion of transmission charges, as payments are made under Transmission Provider's Tariff and Affected System's Tariff for transmission services with respect to the Large Generating Facility. Any repayment shall include interest calculated in accordance with the methodology set forth in FERC's regulations at 18 C.F.R. § 35.19a(a)(2)(iii) from the date of any payment for Network Upgrades through the date on which the Interconnection Customer receives a repayment of such payment pursuant to this subparagraph. Interconnection Customer may assign such repayment rights to any person.

Notwithstanding the foregoing, Interconnection Customer, Transmission Provider, and Affected System Operator may adopt any alternative payment schedule that is mutually agreeable so long as Transmission Provider and Affected System Operator take one of the following actions no later than five years from the Commercial Operation Date: (1) return to Interconnection Customer any amounts advanced for Network Upgrades not previously repaid, or (2) declare in writing that Transmission Provider or Affected System Operator will continue to provide payments to Interconnection Customer on a dollar-for-dollar basis for the non-usage sensitive portion of transmission charges, or

develop an alternative schedule that is mutually agreeable and provides for the return of all amounts advanced for Network Upgrades not previously repaid; however, full reimbursement shall not extend beyond twenty (20) years from the Commercial Operation Date.

If the Large Generating Facility fails to achieve Commercial Operation, but it or another Generating Facility is later constructed and makes use of the Network Upgrades, Transmission Provider and Affected System Operator shall at that time reimburse Interconnection Customer for the amounts advanced for the Network Upgrades. Before any such reimbursement can occur, the Interconnection Customer, or the entity that ultimately constructs the Generating Facility, if different, is responsible for identifying the entity to which reimbursement must be made.

11.4.2 Special Provisions for Affected Systems. Unless Transmission Provider provides, under the LGIA, for the repayment of amounts advanced to Affected System Operator for Network Upgrades, Interconnection Customer and Affected System Operator shall enter into an agreement that provides for such repayment. The agreement shall specify the terms governing payments to be made by Interconnection Customer to the Affected System Operator as well as the repayment by the Affected System Operator.

11.4.3 Notwithstanding any other provision of this LGIA, nothing herein shall be construed as relinquishing or foreclosing any rights, including but not limited to firm transmission rights, capacity rights, transmission congestion rights, or transmission credits, that Interconnection Customer, shall be entitled to, now or in the future under any other agreement or tariff as a result of, or otherwise associated with, the transmission capacity, if any, created by the Network Upgrades, including the right to obtain cash reimbursements or transmission credits for transmission service that is not associated with the Large Generating Facility.

11.5 Provision of Security. At least thirty (30) Calendar Days prior to the commencement of the procurement, installation, or construction of a discrete portion of a Transmission Provider's Interconnection Facilities, Network Upgrades, or Distribution Upgrades, Interconnection Customer shall provide Transmission Provider, at Interconnection Customer's option, a guarantee, a surety bond, letter of credit or other form of security that is reasonably acceptable to Transmission Provider and is consistent with the Uniform Commercial Code of the jurisdiction identified in Article 14.2.1. Such security for payment shall be in an amount sufficient to cover the costs for constructing, procuring and installing the applicable portion of Transmission Provider's Interconnection Facilities, Network Upgrades, or Distribution Upgrades and shall be reduced on a dollar-for-dollar basis for payments made to Transmission Provider for these purposes.

In addition:

11.5.1 The guarantee must be made by an entity that meets the creditworthiness requirements of Transmission Provider, and contain terms and conditions that guarantee payment of any amount that may be due from Interconnection Customer, up to an agreed-to maximum amount.

11.5.2 The letter of credit must be issued by a financial institution reasonably acceptable to Transmission Provider and must specify a reasonable expiration date.

11.5.3 The surety bond must be issued by an insurer reasonably acceptable to Transmission Provider and must specify a reasonable expiration date.

11.6 Interconnection Customer Compensation. If Transmission Provider requests or directs Interconnection Customer to provide a service pursuant to Articles 9.6.3 (Payment for Reactive Power), or 13.5.1 of this LGIA, Transmission Provider shall compensate Interconnection Customer in accordance with Interconnection Customer's applicable rate schedule then in effect unless the provision of such service(s) is subject to an RTO or ISO FERC-approved rate schedule. Interconnection Customer shall serve Transmission Provider or RTO or ISO with any filing of a proposed rate schedule at the time of such filing with FERC. To the extent that no rate schedule is in effect at the time the Interconnection Customer is required to provide or absorb any Reactive Power under this LGIA, Transmission Provider agrees to compensate Interconnection Customer in such amount as would have been due Interconnection Customer had the rate schedule been in effect at the time service commenced; provided, however, that such rate schedule must be filed at FERC or other appropriate Governmental Authority within sixty (60) Calendar Days of the commencement of service.

11.6.1 Interconnection Customer Compensation for Actions During Emergency Condition. Transmission Provider or RTO or ISO shall compensate Interconnection Customer for its provision of real and reactive power and other Emergency Condition services that Interconnection Customer provides to support the Transmission System during an Emergency Condition in accordance with Article 11.6.

Article 12. Invoice

12.1 General. Each Party shall submit to the other Party, on a monthly basis, invoices of amounts due for the preceding month. Each invoice shall state the month to which the invoice applies and fully describe the services and equipment provided. The Parties may discharge mutual debts and payment obligations due and owing to each other on the same date through netting, in which case all amounts a Party owes to the other Party under this LGIA, including interest payments or credits, shall be netted so that only the net amount remaining due shall be paid by the owing Party.

12.2 Final Invoice. Within six months after the first to occur of either (a) completion of the construction of Transmission Provider's Interconnection Facilities and the Network Upgrades or (b) termination of this LGIA, Transmission Provider shall provide an invoice of the final cost of the construction of Transmission Provider's Interconnection Facilities and the Network Upgrades and shall set forth such costs in sufficient detail to enable Interconnection Customer to compare the actual costs with the estimates and to ascertain deviations, if any, from the cost estimates. Transmission Provider shall refund to Interconnection Customer any amount by which the actual payment by Interconnection Customer for estimated costs exceeds the actual costs of construction within thirty (30) Calendar Days of the issuance of such final construction invoice.

12.3 Payment. Invoices shall be rendered to the paying Party at the address specified in Appendix F. The Party receiving the invoice shall pay the invoice within thirty (30) Calendar Days of receipt. All payments shall be made in immediately available funds payable to the other Party, or by wire transfer to a bank named and account designated by the invoicing Party. Payment of invoices by either Party will not constitute a waiver of any rights or claims either Party may have under this LGIA. If Interconnection Customer has not paid the final invoice within thirty (30) Calendar Days of receipt, then Transmission Provider shall be entitled to utilize the security provided by the Interconnection Customer under this LGIA as payment for the amount due under the final invoice. After Transmission Provider has received payment for the final invoice whether through timely payment or utilization of security, Transmission Provider shall refund any remaining security to Interconnection Customer.

12.4 Disputes. In the event of a billing dispute between Transmission Provider and Interconnection Customer, Transmission Provider shall continue to provide Interconnection Service under this LGIA as long as Interconnection Customer: (i) continues to make all payments not in dispute; and (ii) pays to Transmission Provider or into an independent escrow account the portion of the invoice in dispute, pending resolution of such dispute. If Interconnection Customer fails to meet these two requirements for continuation of service, then Transmission Provider may provide notice to Interconnection Customer of a Default pursuant to Article 17. Within thirty (30) Calendar Days after the resolution of the dispute, the Party that owes money to the other Party shall pay the amount due with interest calculated in accord with the methodology set forth in FERC's regulations at 18 CFR § 35.19a(a)(2)(iii).

Article 13. Emergencies

13.1 Definition. "Emergency Condition" shall mean a condition or situation: (i) that in the judgment of the Party making the claim is imminently likely to endanger life or property; or (ii) that, in the case of Transmission Provider, is imminently likely (as determined in a non-discriminatory manner) to cause a material adverse effect on the security of, or damage to the Transmission System, Transmission Provider's Interconnection Facilities or the Transmission Systems of others to which the Transmission System is directly connected; or (iii) that, in the case of Interconnection Customer, is imminently likely (as

determined in a non-discriminatory manner) to cause a material adverse effect on the security of, or damage to**,** the Large Generating Facility or Interconnection Customer's Interconnection Facilities' System restoration and black start shall be considered Emergency Conditions; provided, that Interconnection Customer is not obligated by this LGIA to possess black start capability.

13.2 Obligations. Each Party shall comply with the Emergency Condition procedures of the applicable ISO/RTO, NERC, the Applicable Reliability Council, Applicable Laws and Regulations, and any emergency procedures agreed to by the Joint Operating Committee.

13.3 Notice. Transmission Provider shall notify Interconnection Customer promptly when it becomes aware of an Emergency Condition that affects Transmission Provider's Interconnection Facilities or the Transmission System that may reasonably be expected to affect Interconnection Customer's operation of the Large Generating Facility or Interconnection Customer's Interconnection Facilities. Interconnection Customer shall notify Transmission Provider promptly when it becomes aware of an Emergency Condition that affects the Large Generating Facility or Interconnection Customer's Interconnection Facilities that may reasonably be expected to affect the Transmission System or Transmission Provider's Interconnection Facilities. To the extent information is known, the notification shall describe the Emergency Condition, the extent of the damage or deficiency, the expected effect on the operation of Interconnection Customer's or Transmission Provider's facilities and operations, its anticipated duration and the corrective action taken and/or to be taken. The initial notice shall be followed as soon as practicable with written notice.

13.4 Immediate Action. Unless, in Interconnection Customer's reasonable judgment, immediate action is required, Interconnection Customer shall obtain the consent of Transmission Provider, such consent to not be unreasonably withheld, prior to performing any manual switching operations at the Large Generating Facility or Interconnection Customer's Interconnection Facilities in response to an Emergency Condition either declared by Transmission Provider or otherwise regarding the Transmission System.

13.5 Transmission Provider Authority.

13.5.1 General. Transmission Provider may take whatever actions or inactions with regard to the Transmission System or Transmission Provider's Interconnection Facilities it deems necessary during an Emergency Condition in order to (i) preserve public health and safety, (ii) preserve the reliability of the Transmission System or Transmission Provider's Interconnection Facilities, (iii) limit or prevent damage, and (iv) expedite restoration of service.

Transmission Provider shall use Reasonable Efforts to minimize the effect of such actions or inactions on the Large Generating Facility or Interconnection Customer's Interconnection Facilities. Transmission Provider may, on the basis of technical considerations, require the Large Generating Facility to mitigate an

Emergency Condition by taking actions necessary and limited in scope to remedy the Emergency Condition, including, but not limited to, directing Interconnection Customer to shut-down, start-up, increase or decrease the real or reactive power output of the Large Generating Facility; implementing a reduction or disconnection pursuant to Article 13.5.2; directing Interconnection Customer to assist with blackstart (if available) or restoration efforts; or altering the outage schedules of the Large Generating Facility and Interconnection Customer's Interconnection Facilities. Interconnection Customer shall comply with all of Transmission Provider's operating instructions concerning Large Generating Facility real power and reactive power output within the manufacturer's design limitations of the Large Generating Facility's equipment that is in service and physically available for operation at the time, in compliance with Applicable Laws and Regulations.

13.5.2 Reduction and Disconnection. Transmission Provider may reduce Interconnection Service or disconnect the Large Generating Facility or Interconnection Customer's Interconnection Facilities, when such, reduction or disconnection is necessary under Good Utility Practice due to Emergency Conditions. These rights are separate and distinct from any right of curtailment of Transmission Provider pursuant to Transmission Provider's Tariff. When Transmission Provider can schedule the reduction or disconnection in advance, Transmission Provider shall notify Interconnection Customer of the reasons, timing and expected duration of the reduction or disconnection. Transmission Provider shall coordinate with Interconnection Customer using Good Utility Practice to schedule the reduction or disconnection during periods of least impact to Interconnection Customer and Transmission Provider. Any reduction or disconnection shall continue only for so long as reasonably necessary under Good Utility Practice. The Parties shall cooperate with each other to restore the Large Generating Facility, the Interconnection Facilities, and the Transmission System to their normal operating state as soon as practicable consistent with Good Utility Practice.

13.6 Interconnection Customer Authority. Consistent with Good Utility Practice and the LGIA and the LGIP, Interconnection Customer may take actions or inactions with regard to the Large Generating Facility or Interconnection Customer's Interconnection Facilities during an Emergency Condition in order to (i) preserve public health and safety, (ii) preserve the reliability of the Large Generating Facility or Interconnection Customer's Interconnection Facilities, (iii) limit or prevent damage, and (iv) expedite restoration of service. Interconnection Customer shall use Reasonable Efforts to minimize the effect of such actions or inactions on the Transmission System and Transmission Provider's Interconnection Facilities. Transmission Provider shall use Reasonable Efforts to assist Interconnection Customer in such actions.

13.7 Limited Liability. Except as otherwise provided in Article 11.6.1 of this LGIA, neither Party shall be liable to the other for any action it takes in responding to an Emergency

Condition so long as such action is made in good faith and is consistent with Good Utility Practice.

Article 14. Regulatory Requirements and Governing Law

14.1 Regulatory Requirements. Each Party's obligations under this LGIA shall be subject to its receipt of any required approval or certificate from one or more Governmental Authorities in the form and substance satisfactory to the applying Party, or the Party making any required filings with, or providing notice to, such Governmental Authorities, and the expiration of any time period associated therewith. Each Party shall in good faith seek and use its Reasonable Efforts to obtain such other approvals. Nothing in this LGIA shall require Interconnection Customer to take any action that could result in its inability to obtain, or its loss of, status or exemption under the Federal Power Act, the Public Utility Holding Company Act of 1935, as amended, or the Public Utility Regulatory Policies Act of 1978.

14.2 Governing Law.

14.2.1 The validity, interpretation and performance of this LGIA and each of its provisions shall be governed by the laws of the state where the Point of Interconnection is located, without regard to its conflicts of law principles.

14.2.2 This LGIA is subject to all Applicable Laws and Regulations.

14.2.3 Each Party expressly reserves the right to seek changes in, appeal, or otherwise contest any laws, orders, rules, or regulations of a Governmental Authority.

Article 15. Notices.

15.1 General. Unless otherwise provided in this LGIA, any notice, demand or request required or permitted to be given by either Party to the other and any instrument required or permitted to be tendered or delivered by either Party in writing to the other shall be effective when delivered and may be so given, tendered or delivered, by recognized national courier, or by depositing the same with the United States Postal Service with postage prepaid, for delivery by certified or registered mail, addressed to the Party, or personally delivered to the Party, at the address set out in Appendix F, Addresses for Delivery of Notices and Billings.

Either Party may change the notice information in this LGIA by giving five (5) Business Days written notice prior to the effective date of the change.

15.2 Billings and Payments. Billings and payments shall be sent to the addresses set out in Appendix F.

15.3 Alternative Forms of Notice. Any notice or request required or permitted to be given by a Party to the other and not required by this Agreement to be given in writing may be so given by telephone, facsimile or email to the telephone numbers and email addresses set out in Appendix F.

15.4 Operations and Maintenance Notice. Each Party shall notify the other Party in writing of the identity of the person(s) that it designates as the point(s) of contact with respect to the implementation of Articles 9 and 10.

Article 16. Force Majeure

16.1 Force Majeure.

16.1.1 Economic hardship is not considered a Force Majeure event.

16.1.2 Neither Party shall be considered to be in Default with respect to any obligation hereunder, (including obligations under Article 4), other than the obligation to pay money when due, if prevented from fulfilling such obligation by Force Majeure. A Party unable to fulfill any obligation hereunder (other than an obligation to pay money when due) by reason of Force Majeure shall give notice and the full particulars of such Force Majeure to the other Party in writing or by telephone as soon as reasonably possible after the occurrence of the cause relied upon. Telephone notices given pursuant to this article shall be confirmed in writing as soon as reasonably possible and shall specifically state full particulars of the Force Majeure, the time and date when the Force Majeure occurred and when the Force Majeure is reasonably expected to cease. The Party affected shall exercise due diligence to remove such disability with reasonable dispatch, but shall not be required to accede or agree to any provision not satisfactory to it in order to settle and terminate a strike or other labor disturbance.

Article 17. Default

17.1 Default

17.1.1 General. No Default shall exist where such failure to discharge an obligation (other than the payment of money) is the result of Force Majeure as defined in this LGIA or the result of an act of omission of the other Party. Upon a Breach, the non-breaching Party shall give written notice of such Breach to the breaching Party. Except as provided in Article 17.1.2, the breaching Party shall have thirty (30) Calendar Days from receipt of the Default notice within which to cure such Breach; provided however, if such Breach is not capable of cure within thirty (30) Calendar Days, the breaching Party shall commence such cure within thirty (30) Calendar Days after notice and continuously and diligently complete such cure

within ninety (90) Calendar Days from receipt of the Default notice; and, if cured within such time, the Breach specified in such notice shall cease to exist.

17.1.2 Right to Terminate. If a Breach is not cured as provided in this article, or if a Breach is not capable of being cured within the period provided for herein, the non-breaching Party shall have the right to declare a Default and terminate this LGIA by written notice at any time until cure occurs, and be relieved of any further obligation hereunder and, whether or not that Party terminates this LGIA, to recover from the breaching Party all amounts due hereunder, plus all other damages and remedies to which it is entitled at law or in equity. The provisions of this article will survive termination of this LGIA.

Article 18. Indemnity, Consequential Damages and Insurance

18.1 Indemnity. The Parties shall at all times indemnify, defend, and hold the other Party harmless from, any and all damages, losses, claims, including claims and actions relating to injury to or death of any person or damage to property, demand, suits, recoveries, costs and expenses, court costs, attorney fees, and all other obligations by or to third parties, arising out of or resulting from the other Party's action or inactions of its obligations under this LGIA on behalf of the Indemnifying Party, except in cases of gross negligence or intentional wrongdoing by the Indemnified Party.

18.1.1 Indemnified Person. If an Indemnified Person is entitled to indemnification under this Article 18 as a result of a claim by a third party, and the Indemnifying Party fails, after notice and reasonable opportunity to proceed under Article 18.1, to assume the defense of such claim, such Indemnified Person may at the expense of the Indemnifying Party contest, settle or consent to the entry of any judgment with respect to, or pay in full, such claim.

18.1.2 Indemnifying Party. If an Indemnifying Party is obligated to indemnify and hold any Indemnified Person harmless under this Article 18, the amount owing to the Indemnified Person shall be the amount of such Indemnified Person's actual Loss, net of any insurance or other recovery.

18.1.3 Indemnity Procedures. Promptly after receipt by an Indemnified Person of any claim or notice of the commencement of any action or administrative or legal proceeding or investigation as to which the indemnity provided for in Article 18.1 may apply, the Indemnified Person shall notify the Indemnifying Party of such fact. Any failure of or delay in such notification shall not affect a Party's indemnification obligation unless such failure or delay is materially prejudicial to the Indemnifying Party.

The Indemnifying Party shall have the right to assume the defense thereof with counsel designated by such Indemnifying Party and reasonably satisfactory to the Indemnified Person. If the defendants in any such action include one or more

Indemnified Persons and the Indemnifying Party and if the Indemnified Person reasonably concludes that there may be legal defenses available to it and/or other Indemnified Persons which are different from or additional to those available to the Indemnifying Party, the Indemnified Person shall have the right to select separate counsel to assert such legal defenses and to otherwise participate in the defense of such action on its own behalf. In such instances, the Indemnifying Party shall only be required to pay the fees and expenses of one additional attorney to represent an Indemnified Person or Indemnified Persons having such differing or additional legal defenses.

The Indemnified Person shall be entitled, at its expense, to participate in any such action, suit or proceeding, the defense of which has been assumed by the Indemnifying Party. Notwithstanding the foregoing, the Indemnifying Party (i) shall not be entitled to assume and control the defense of any such action, suit or proceedings if and to the extent that, in the opinion of the Indemnified Person and its counsel, such action, suit or proceeding involves the potential imposition of criminal liability on the Indemnified Person, or there exists a conflict or adversity of interest between the Indemnified Person and the Indemnifying Party, in such event the Indemnifying Party shall pay the reasonable expenses of the Indemnified Person, and (ii) shall not settle or consent to the entry of any judgment in any action, suit or proceeding without the consent of the Indemnified Person, which shall not be reasonably withheld, conditioned or delayed.

18.2 Consequential Damages. Other than the Liquidated Damages heretofore described, in no event shall either Party be liable under any provision of this LGIA for any losses, damages, costs or expenses for any special, indirect, incidental, consequential, or punitive damages, including but not limited to loss of profit or revenue, loss of the use of equipment, cost of capital, cost of temporary equipment or services, whether based in whole or in part in contract, in tort, including negligence, strict liability, or any other theory of liability; provided, however, that damages for which a Party may be liable to the other Party under another agreement will not be considered to be special, indirect, incidental, or consequential damages hereunder.

18.3 Insurance. Each party shall, at its own expense, maintain in force throughout the period of this LGIA, and until released by the other Party, the following minimum insurance coverages, with insurers authorized to do business in the state where the Point of Interconnection is located:

18.3.1 Employers' Liability and Workers' Compensation Insurance providing statutory benefits in accordance with the laws and regulations of the state in which the Point of Interconnection is located.

18.3.2 Commercial General Liability Insurance including premises and operations, personal injury, broad form property damage, broad form blanket contractual liability coverage (including coverage for the contractual indemnification)

products and completed operations coverage, coverage for explosion, collapse and underground hazards, independent contractors coverage, coverage for pollution to the extent normally available and punitive damages to the extent normally available and a cross liability endorsement, with minimum limits of One Million Dollars ($1,000,000) per occurrence/One Million Dollars ($1,000,000) aggregate combined single limit for personal injury, bodily injury, including death and property damage.

18.3.3 Comprehensive Automobile Liability Insurance for coverage of owned and non-owned and hired vehicles, trailers or semi-trailers designed for travel on public roads, with a minimum, combined single limit of One Million Dollars ($1,000,000) per occurrence for bodily injury, including death, and property damage.

18.3.4 Excess Public Liability Insurance over and above the Employers' Liability Commercial General Liability and Comprehensive Automobile Liability Insurance coverage, with a minimum combined single limit of Twenty Million Dollars ($20,000,000) per occurrence/Twenty Million Dollars ($20,000,000) aggregate.

18.3.5 The Commercial General Liability Insurance, Comprehensive Automobile Insurance and Excess Public Liability Insurance policies shall name the other Party, its parent, associated and Affiliate companies and their respective directors, officers, agents, servants and employees ("Other Party Group") as additional insured. All policies shall contain provisions whereby the insurers waive all rights of subrogation in accordance with the provisions of this LGIA against the Other Party Group and provide thirty (30) Calendar Days advance written notice to the Other Party Group prior to anniversary date of cancellation or any material change in coverage or condition.

18.3.6 The Commercial General Liability Insurance, Comprehensive Automobile Liability Insurance and Excess Public Liability Insurance policies shall contain provisions that specify that the policies are primary and shall apply to such extent without consideration for other policies separately carried and shall state that each insured is provided coverage as though a separate policy had been issued to each, except the insurer's liability shall not be increased beyond the amount for which the insurer would have been liable had only one insured been covered. Each Party shall be responsible for its respective deductibles or retentions.

18.3.7 The Commercial General Liability Insurance, Comprehensive Automobile Liability Insurance and Excess Public Liability Insurance policies, if written on a Claims First Made Basis, shall be maintained in full force and effect for two (2) years after termination of this LGIA, which coverage may be in the form of tail coverage or extended reporting period coverage if agreed by the Parties.

18.3.8 The requirements contained herein as to the types and limits of all insurance to be maintained by the Parties are not intended to and shall not in any manner, limit or qualify the liabilities and obligations assumed by the Parties under this LGIA.

18.3.9 Within ten (10) Calendar Days following execution of this LGIA, and as soon as practicable after the end of each fiscal year or at the renewal of the insurance policy and in any event within ninety (90) Calendar Days thereafter, each Party shall provide certification of all insurance required in this LGIA, executed by each insurer or by an authorized representative of each insurer.

18.3.10 Notwithstanding the foregoing, each Party may self-insure to meet the minimum insurance requirements of Articles 18.3.2 through 18.3.8 to the extent it maintains a self-insurance program; provided that, such Party's senior secured debt is rated at investment grade or better by Standard & Poor's and that its self-insurance program meets the minimum insurance requirements of Articles 18.3.2 through 18.3.8. For any period of time that a Party's senior secured debt is unrated by Standard & Poor's or is rated at less than investment grade by Standard & Poor's, such Party shall comply with the insurance requirements applicable to it under Articles 18.3.2 through 18.3.9. In the event that a Party is permitted to self-insure pursuant to this article, it shall notify the other Party that it meets the requirements to self-insure and that its self-insurance program meets the minimum insurance requirements in a manner consistent with that specified in Article 18.3.9.

18.3.11 The Parties agree to report to each other in writing as soon as practical all accidents or occurrences resulting in injuries to any person, including death, and any property damage arising out of this LGIA.

Article 19. Assignment

19.1 Assignment. This LGIA may be assigned by either Party only with the written consent of the other; provided that either Party may assign this LGIA without the consent of the other Party to any Affiliate of the assigning Party with an equal or greater credit rating and with the legal authority and operational ability to satisfy the obligations of the assigning Party under this LGIA; and provided further that Interconnection Customer shall have the right to assign this LGIA, without the consent of Transmission Provider, for collateral security purposes to aid in providing financing for the Large Generating Facility, provided that Interconnection Customer will promptly notify Transmission Provider of any such assignment. Any financing arrangement entered into by Interconnection Customer pursuant to this article will provide that prior to or upon the exercise of the secured Party's, trustee's or mortgagee's assignment rights pursuant to said arrangement, the secured creditor, the trustee or mortgagee will notify Transmission Provider of the date and particulars of any such exercise of assignment right(s), including providing the Transmission Provider with proof that it meets the requirements of Articles 11.5 and 18.3. Any attempted assignment that violates this article is void and ineffective. Any assignment under this LGIA shall not relieve a Party of its obligations, nor shall a

Party's obligations be enlarged, in whole or in part, by reason thereof. Where required, consent to assignment will not be unreasonably withheld, conditioned or delayed.

Article 20. Severability

20.1 Severability. If any provision in this LGIA is finally determined to be invalid, void or unenforceable by any court or other Governmental Authority having jurisdiction, such determination shall not invalidate, void or make unenforceable any other provision, agreement or covenant of this LGIA; provided that if Interconnection Customer (or any third party, but only if such third party is not acting at the direction of Transmission Provider) seeks and obtains such a final determination with respect to any provision of the Alternate Option (Article 5.1.2), or the Negotiated Option (Article 5.1.4), then none of these provisions shall thereafter have any force or effect and the Parties' rights and obligations shall be governed solely by the Standard Option (Article 5.1.1).

Article 21. Comparability

21.1 Comparability. The Parties will comply with all applicable comparability and code of conduct laws, rules and regulations, as amended from time to time.

Article 22. Confidentiality

22.1 Confidentiality. Confidential Information shall include, without limitation, all information relating to a Party's technology, research and development, business affairs, and pricing, and any information supplied by either of the Parties to the other prior to the execution of this LGIA.

Information is Confidential Information only if it is clearly designated or marked in writing as confidential on the face of the document, or, if the information is conveyed orally or by inspection, if the Party providing the information orally informs the Party receiving the information that the information is confidential.

If requested by either Party, the other Party shall provide in writing, the basis for asserting that the information referred to in this Article 22 warrants confidential treatment, and the requesting Party may disclose such writing to the appropriate Governmental Authority. Each Party shall be responsible for the costs associated with affording confidential treatment to its information.

22.1.1 Term. During the term of this LGIA, and for a period of three (3) years after the expiration or termination of this LGIA, except as otherwise provided in this Article 22, each Party shall hold in confidence and shall not disclose to any person Confidential Information.

22.1.2 Scope. Confidential Information shall not include information that the receiving Party can demonstrate: (1) is generally available to the public other than as a result of a disclosure by the receiving Party; (2) was in the lawful possession of the receiving Party on a non-confidential basis before receiving it from the disclosing Party; (3) was supplied to the receiving Party without restriction by a third party, who, to the knowledge of the receiving Party after due inquiry, was under no obligation to the disclosing Party to keep such information confidential; (4) was independently developed by the receiving Party without reference to Confidential Information of the disclosing Party; (5) is, or becomes, publicly known, through no wrongful act or omission of the receiving Party or Breach of this LGIA; or (6) is required, in accordance with Article 22.1.7 of the LGIA, Order of Disclosure, to be disclosed by any Governmental Authority or is otherwise required to be disclosed by law or subpoena, or is necessary in any legal proceeding establishing rights and obligations under this LGIA. Information designated as Confidential Information will no longer be deemed confidential if the Party that designated the information as confidential notifies the other Party that it no longer is confidential.

22.1.3 Release of Confidential Information. Neither Party shall release or disclose Confidential Information to any other person, except to its Affiliates (limited by the Standards of Conduct requirements), subcontractors, employees, consultants, or to parties who may be or considering providing financing to or equity participation with Interconnection Customer, or to potential purchasers or assignees of Interconnection Customer, on a need-to-know basis in connection with this LGIA, unless such person has first been advised of the confidentiality provisions of this Article 22 and has agreed to comply with such provisions. Notwithstanding the foregoing, a Party providing Confidential Information to any person shall remain primarily responsible for any release of Confidential Information in contravention of this Article 22.

22.1.4 Rights. Each Party retains all rights, title, and interest in the Confidential Information that each Party discloses to the other Party. The disclosure by each Party to the other Party of Confidential Information shall not be deemed a waiver by either Party or any other person or entity of the right to protect the Confidential Information from public disclosure.

22.1.5 No Warranties. By providing Confidential Information, neither Party makes any warranties or representations as to its accuracy or completeness. In addition, by supplying Confidential Information, neither Party obligates itself to provide any particular information or Confidential Information to the other Party nor to enter into any further agreements or proceed with any other relationship or joint venture.

22.1.6 Standard of Care. Each Party shall use at least the same standard of care to protect Confidential Information it receives as it uses to protect its own Confidential Information from unauthorized disclosure, publication or

dissemination. Each Party may use Confidential Information solely to fulfill its obligations to the other Party under this LGIA or its regulatory requirements.

22.1.7 Order of Disclosure. If a court or a Government Authority or entity with the right, power, and apparent authority to do so requests or requires either Party, by subpoena, oral deposition, interrogatories, requests for production of documents, administrative order, or otherwise, to disclose Confidential Information, that Party shall provide the other Party with prompt notice of such request(s) or requirement(s) so that the other Party may seek an appropriate protective order or waive compliance with the terms of this LGIA. Notwithstanding the absence of a protective order or waiver, the Party may disclose such Confidential Information which, in the opinion of its counsel, the Party is legally compelled to disclose. Each Party will use Reasonable Efforts to obtain reliable assurance that confidential treatment will be accorded any Confidential Information so furnished.

22.1.8 Termination of Agreement. Upon termination of this LGIA for any reason, each Party shall, within ten (10) Calendar Days of receipt of a written request from the other Party, use Reasonable Efforts to destroy, erase, or delete (with such destruction, erasure, and deletion certified in writing to the other Party) or return to the other Party, without retaining copies thereof, any and all written or electronic Confidential Information received from the other Party.

22.1.9 Remedies. The Parties agree that monetary damages would be inadequate to compensate a Party for the other Party's Breach of its obligations under this Article 22. Each Party accordingly agrees that the other Party shall be entitled to equitable relief, by way of injunction or otherwise, if the first Party Breaches or threatens to Breach its obligations under this Article 22, which equitable relief shall be granted without bond or proof of damages, and the receiving Party shall not plead in defense that there would be an adequate remedy at law. Such remedy shall not be deemed an exclusive remedy for the Breach of this Article 22, but shall be in addition to all other remedies available at law or in equity. The Parties further acknowledge and agree that the covenants contained herein are necessary for the protection of legitimate business interests and are reasonable in scope. No Party, however, shall be liable for indirect, incidental, or consequential or punitive damages of any nature or kind resulting from or arising in connection with this Article 22.

22.1.10 Disclosure to FERC, its Staff, or a State. Notwithstanding anything in this Article 22 to the contrary, and pursuant to 18 CFR section 1b.20, if FERC or its staff, during the course of an investigation or otherwise, requests information from one of the Parties that is otherwise required to be maintained in confidence pursuant to this LGIA, the Party shall provide the requested information to FERC or its staff, within the time provided for in the request for information. In providing the information to FERC or its staff, the Party must, consistent with 18 CFR section 388.112, request that the information be treated as confidential and

non-public by FERC and its staff and that the information be withheld from public disclosure. Parties are prohibited from notifying the other Party to this LGIA prior to the release of the Confidential Information to FERC or its staff. The Party shall notify the other Party to the LGIA when it is notified by FERC or its staff that a request to release Confidential Information has been received by FERC, at which time either of the Parties may respond before such information would be made public, pursuant to 18 CFR section 388.112. Requests from a state regulatory body conducting a confidential investigation shall be treated in a similar manner if consistent with the applicable state rules and regulations.

22.1.11 Subject to the exception in Article 22.1.10, any information that a Party claims is competitively sensitive, commercial or financial information under this LGIA ("Confidential Information") shall not be disclosed by the other Party to any person not employed or retained by the other Party, except to the extent disclosure is (i) required by law; (ii) reasonably deemed by the disclosing Party to be required to be disclosed in connection with a dispute between or among the Parties, or the defense of litigation or dispute; (iii) otherwise permitted by consent of the other Party, such consent not to be unreasonably withheld; or (iv) necessary to fulfill its obligations under this LGIA or as a transmission service provider or a Control Area operator including disclosing the Confidential Information to an RTO or ISO or to a regional or national reliability organization. The Party asserting confidentiality shall notify the other Party in writing of the information it claims is confidential. Prior to any disclosures of the other Party's Confidential Information under this subparagraph, or if any third party or Governmental Authority makes any request or demand for any of the information described in this subparagraph, the disclosing Party agrees to promptly notify the other Party in writing and agrees to assert confidentiality and cooperate with the other Party in seeking to protect the Confidential Information from public disclosure by confidentiality agreement, protective order or other reasonable measures.

Article 23. Environmental Releases

23.1 Each Party shall notify the other Party, first orally and then in writing, of the release of any Hazardous Substances, any asbestos or lead abatement activities, or any type of remediation activities related to the Large Generating Facility or the Interconnection Facilities, each of which may reasonably be expected to affect the other Party. The notifying Party shall: (i) provide the notice as soon as practicable, provided such Party makes a good faith effort to provide the notice no later than twenty-four hours after such Party becomes aware of the occurrence; and (ii) promptly furnish to the other Party copies of any publicly available reports filed with any Governmental Authorities addressing such events.

Article 24. Information Requirements

24.1 Information Acquisition. Transmission Provider and Interconnection Customer shall submit specific information regarding the electrical characteristics of their respective facilities to each other as described below and in accordance with Applicable Reliability Standards.

24.2 Information Submission by Transmission Provider. The initial information submission by Transmission Provider shall occur no later than one hundred eighty (180) Calendar Days prior to Trial Operation and shall include Transmission System information necessary to allow Interconnection Customer to select equipment and meet any system protection and stability requirements, unless otherwise agreed to by the Parties. On a monthly basis Transmission Provider shall provide Interconnection Customer a status report on the construction and installation of Transmission Provider's Interconnection Facilities and Network Upgrades, including, but not limited to, the following information: (1) progress to date; (2) a description of the activities since the last report; (3) a description of the action items for the next period; and (4) the delivery status of equipment ordered.

24.3 Updated Information Submission by Interconnection Customer. The updated information submission by Interconnection Customer, including manufacturer information, shall occur no later than one hundred eighty (180) Calendar Days prior to the Trial Operation. Interconnection Customer shall submit a completed copy of the Large Generating Facility data requirements contained in Appendix 3 to the LGIP. It shall also include any additional information provided to Transmission Provider for the Feasibility Study, Serial Interconnection System Impact Study, Definitive Interconnection System Impact Study, and Interconnection Facilities Study. Information in this submission shall be the most current Large Generating Facility design or expected performance data. Information submitted for stability models shall be compatible with Transmission Provider standard models. If there is no compatible model, Interconnection Customer will work with a consultant mutually agreed to by the Parties to develop and supply a standard model and associated information.

If Interconnection Customer's data is materially different from what was originally provided to Transmission Provider pursuant to the Interconnection Study Agreement between Transmission Provider and Interconnection Customer, then Transmission Provider will conduct appropriate studies to determine the impact on Transmission Provider Transmission System based on the actual data submitted pursuant to this Article 24.3. The Interconnection Customer shall not begin Trial Operation until such studies are completed.

24.4 Information Supplementation. Prior to the Operation Date, the Parties shall supplement their information submissions described above in this Article 24 with any and all "as-built" Large Generating Facility information or "as-tested" performance information that differs from the initial submissions or, alternatively, written confirmation that no such differences exist. The Interconnection Customer shall conduct tests on the Large Generating Facility as required by Good Utility Practice such as an

open circuit "step voltage" test on the Large Generating Facility to verify proper operation of the Large Generating Facility's automatic voltage regulator.

Unless otherwise agreed, the test conditions shall include: (1) Large Generating Facility at synchronous speed; (2) automatic voltage regulator on and in voltage control mode; and (3) a five percent change in Large Generating Facility terminal voltage initiated by a change in the voltage regulators reference voltage. Interconnection Customer shall provide validated test recordings showing the responses of Large Generating Facility terminal and field voltages. In the event that direct recordings of these voltages is impractical, recordings of other voltages or currents that mirror the response of the Large Generating Facility's terminal or field voltage are acceptable if information necessary to translate these alternate quantities to actual Large Generating Facility terminal or field voltages is provided. Large Generating Facility testing shall be conducted and results provided to Transmission Provider for each individual generating unit in a station.

Subsequent to the Operation Date, Interconnection Customer shall provide Transmission Provider any information changes due to equipment replacement, repair, or adjustment. Transmission Provider shall provide Interconnection Customer any information changes due to equipment replacement, repair or adjustment in the directly connected substation or any adjacent Transmission Provider-owned substation that may affect Interconnection Customer's Interconnection Facilities equipment ratings, protection or operating requirements. The Parties shall provide such information no later than thirty (30) Calendar Days after the date of the equipment replacement, repair or adjustment.

Article 25. Information Access and Audit Rights

25.1 Information Access. Each Party (the "disclosing Party") shall make available to the other Party information that is in the possession of the disclosing Party and is necessary in order for the other Party to: (i) verify the costs incurred by the disclosing Party for which the other Party is responsible under this LGIA; and (ii) carry out its obligations and responsibilities under this LGIA. The Parties shall not use such information for purposes other than those set forth in this Article 25.1 and to enforce their rights under this LGIA.

25.2 Reporting of Non-Force Majeure Events. Each Party (the "notifying Party") shall notify the other Party when the notifying Party becomes aware of its inability to comply with the provisions of this LGIA for a reason other than a Force Majeure event. The Parties agree to cooperate with each other and provide necessary information regarding such inability to comply, including the date, duration, reason for the inability to comply, and corrective actions taken or planned to be taken with respect to such inability to comply. Notwithstanding the foregoing, notification, cooperation or information provided under this article shall not entitle the Party receiving such notification to allege a cause for anticipatory breach of this LGIA.

25.3 Audit Rights. Subject to the requirements of confidentiality under Article 22 of this LGIA, each Party shall have the right, during normal business hours, and upon prior reasonable notice to the other Party, to audit at its own expense the other Party's accounts and records pertaining to either Party's performance or either Party's satisfaction of obligations under this LGIA. Such audit rights shall include audits of the other Party's costs, calculation of invoiced amounts, Transmission Provider's efforts to allocate responsibility for the provision of reactive support to the Transmission System, Transmission Provider's efforts to allocate responsibility for interruption or reduction of generation on the Transmission System, and each Party's actions in an Emergency Condition. Any audit authorized by this article shall be performed at the offices where such accounts and records are maintained and shall be limited to those portions of such accounts and records that relate to each Party's performance and satisfaction of obligations under this LGIA. Each Party shall keep such accounts and records for a period equivalent to the audit rights periods described in Article 25.4.

25.4 Audit Rights Periods.

25.4.1 Audit Rights Period for Construction-Related Accounts and Records. Accounts and records related to the design, engineering, procurement, and construction of Transmission Provider's Interconnection Facilities and Network Upgrades shall be subject to audit for a period of twenty-four months following Transmission Provider's issuance of a final invoice in accordance with Article 12.2.

25.4.2 Audit Rights Period for All Other Accounts and Records. Accounts and records related to either Party's performance or satisfaction of all obligations under this LGIA other than those described in Article 25.4.1 shall be subject to audit as follows: (i) for an audit relating to cost obligations, the applicable audit rights period shall be twenty-four months after the auditing Party's receipt of an invoice giving rise to such cost obligations; and (ii) for an audit relating to all other obligations, the applicable audit rights period shall be twenty-four months after the event for which the audit is sought.

25.5 Audit Results. If an audit by a Party determines that an overpayment or an underpayment has occurred, a notice of such overpayment or underpayment shall be given to the other Party together with those records from the audit which support such determination.

Article 26. Subcontractors

26.1 General. Nothing in this LGIA shall prevent a Party from utilizing the services of any subcontractor as it deems appropriate to perform its obligations under this LGIA; provided, however, that each Party shall require its subcontractors to comply with all applicable terms and conditions of this LGIA in providing such services and each Party shall remain primarily liable to the other Party for the performance of such subcontractor.

26.2 Responsibility of Principal. The creation of any subcontract relationship shall not relieve the hiring Party of any of its obligations under this LGIA. The hiring Party shall be fully responsible to the other Party for the acts or omissions of any subcontractor the hiring Party hires as if no subcontract had been made; provided, however, that in no event shall Transmission Provider be liable for the actions or inactions of Interconnection Customer or its subcontractors with respect to obligations of Interconnection Customer under Article 5 of this LGIA. Any applicable obligation imposed by this LGIA upon the hiring Party shall be equally binding upon, and shall be construed as having application to, any subcontractor of such Party.

26.3 No Limitation by Insurance. The obligations under this Article 26 will not be limited in any way by any limitation of subcontractor's insurance.

Article 27. Disputes

27.1 Submission. In the event either Party has a dispute, or asserts a claim, that arises out of or in connection with this LGIA or its performance, such Party (the "disputing Party") shall provide the other Party with written notice of the dispute or claim ("Notice of Dispute"). Such dispute or claim shall be referred to a designated senior representative of each Party for resolution on an informal basis as promptly as practicable after receipt of the Notice of Dispute by the other Party. In the event the designated representatives are unable to resolve the claim or dispute through unassisted or assisted negotiations within thirty (30) Calendar Days of the other Party's receipt of the Notice of Dispute, such claim or dispute may, upon mutual agreement of the Parties, be submitted to arbitration and resolved in accordance with the arbitration procedures set forth below. In the event the Parties do not agree to submit such claim or dispute to arbitration, each Party may exercise whatever rights and remedies it may have in equity or at law consistent with the terms of this LGIA.

27.2 External Arbitration Procedures. Any arbitration initiated under this LGIA shall be conducted before a single neutral arbitrator appointed by the Parties. If the Parties fail to agree upon a single arbitrator within ten (10) Calendar Days of the submission of the dispute to arbitration, each Party shall choose one arbitrator who shall sit on a three-member arbitration panel. The two arbitrators so chosen shall within twenty (20) Calendar Days select a third arbitrator to chair the arbitration panel. In either case, the arbitrators shall be knowledgeable in electric utility matters, including electric transmission and bulk power issues, and shall not have any current or past substantial business or financial relationships with any party to the arbitration (except prior arbitration). The arbitrator(s) shall provide each of the Parties an opportunity to be heard and, except as otherwise provided herein, shall conduct the arbitration in accordance with the Commercial Arbitration Rules of the American Arbitration Association ("Arbitration Rules") and any applicable FERC regulations or RTO rules; provided, however, in the event of a conflict between the Arbitration Rules and the terms of this Article 27, the terms of this Article 27 shall prevail.

27.3 Arbitration Decisions. Unless otherwise agreed by the Parties, the arbitrator(s) shall render a decision within ninety (90) Calendar Days of appointment and shall notify the Parties in writing of such decision and the reasons therefor. The arbitrator(s) shall be authorized only to interpret and apply the provisions of this LGIA and shall have no power to modify or change any provision of this Agreement in any manner. The decision of the arbitrator(s) shall be final and binding upon the Parties, and judgment on the award may be entered in any court having jurisdiction. The decision of the arbitrator(s) may be appealed solely on the grounds that the conduct of the arbitrator(s), or the decision itself, violated the standards set forth in the Federal Arbitration Act or the Administrative Dispute Resolution Act. The final decision of the arbitrator must also be filed with FERC if it affects jurisdictional rates, terms and conditions of service, Interconnection Facilities, or Network Upgrades.

27.4 Costs. Each Party shall be responsible for its own costs incurred during the arbitration process and for the following costs, if applicable: (1) the cost of the arbitrator chosen by the Party to sit on the three member panel and one half of the cost of the third arbitrator chosen; or (2) one half the cost of the single arbitrator jointly chosen by the Parties.

Article 28. Representations, Warranties, and Covenants

28.1 General. Each Party makes the following representations, warranties and covenants:

28.1.1 Good Standing. Such Party is duly organized, validly existing and in good standing under the laws of the state in which it is organized, formed, or incorporated, as applicable; that it is qualified to do business in the state or states in which the Large Generating Facility, Interconnection Facilities and Network Upgrades owned by such Party, as applicable, are located**;** and that it has the corporate power and authority to own its properties, to carry on its business as now being conducted and to enter into this LGIA and carry out the transactions contemplated hereby and perform and carry out all covenants and obligations on its part to be performed under and pursuant to this LGIA.

28.1.2 Authority. Such Party has the right, power and authority to enter into this LGIA, to become a Party hereto and to perform its obligations hereunder. This LGIA is a legal, valid and binding obligation of such Party, enforceable against such Party in accordance with its terms, except as the enforceability thereof may be limited by applicable bankruptcy, insolvency, reorganization or other similar laws affecting creditors' rights generally and by general equitable principles (regardless of whether enforceability is sought in a proceeding in equity or at law).

28.1.3 No Conflict. The execution, delivery and performance of this LGIA does not violate or conflict with the organizational or formation documents, or bylaws or operating agreement, of such Party, or any judgment, license, permit, order,

material agreement or instrument applicable to or binding upon such Party or any of its assets.

28.1.4 Consent and Approval. Such Party has sought or obtained, or, in accordance with this LGIA will seek or obtain, each consent, approval, authorization, order, or acceptance by any Governmental Authority in connection with the execution, delivery and performance of this LGIA, and it will provide to any Governmental Authority notice of any actions under this LGIA that are required by Applicable Laws and Regulations.

Article 29. Joint Operating Committee

29.1 Joint Operating Committee. Except in the case of ISOs and RTOs, Transmission Provider shall constitute a Joint Operating Committee to coordinate operating and technical considerations of Interconnection Service. At least six (6) months prior to the expected Initial Synchronization Date, Interconnection Customer and Transmission Provider shall each appoint one representative and one alternate to the Joint Operating Committee. Each Interconnection Customer shall notify Transmission Provider of its appointment in writing. Such appointments may be changed at any time by similar notice. The Joint Operating Committee shall meet as necessary, but not less than once each calendar year, to carry out the duties set forth herein. The Joint Operating Committee shall hold a meeting at the request of either Party, at a time and place agreed upon by the representatives. The Joint Operating Committee shall perform all of its duties consistent with the provisions of this LGIA. Each Party shall cooperate in providing to the Joint Operating Committee all information required in the performance of the Joint Operating Committee's duties. All decisions and agreements, if any, made by the Joint Operating Committee, shall be evidenced in writing. The duties of the Joint Operating Committee shall include the following:

29.1.1 Establish data requirements and operating record requirements.

29.1.2 Review the requirements, standards, and procedures for data acquisition equipment, protective equipment, and any other equipment or software.

29.1.3 Annually review the one (1) year forecast of maintenance and planned outage schedules of Transmission Provider's and Interconnection Customer's facilities at the Point of Interconnection.

29.1.4 Coordinate the scheduling of maintenance and planned outages on the Interconnection Facilities, the Large Generating Facility and other facilities that impact the normal operation of the interconnection of the Large Generating Facility to the Transmission System.

29.1.5 Ensure that information is being provided by each Party regarding equipment availability.

29.1.6 Perform such other duties as may be conferred upon it by mutual agreement of the Parties.

Article 30. Miscellaneous

30.1 Binding Effect. This LGIA and the rights and obligations hereof, shall be binding upon and shall inure to the benefit of the successors and assigns of the Parties hereto.

30.2 Conflicts. In the event of a conflict between the body of this LGIA and any attachment, appendices or exhibits hereto, the terms and provisions of the body of this LGIA shall prevail and be deemed the final intent of the Parties.

30.3 Rules of Interpretation. This LGIA, unless a clear contrary intention appears, shall be construed and interpreted as follows: (1) the singular number includes the plural number and vice versa; (2) reference to any person includes such person's successors and assigns but, in the case of a Party, only if such successors and assigns are permitted by this LGIA, and reference to a person in a particular capacity excludes such person in any other capacity or individually; (3) reference to any agreement (including this LGIA), document, instrument or tariff means such agreement, document, instrument, or tariff as amended or modified and in effect from time to time in accordance with the terms thereof and, if applicable, the terms hereof; (4) reference to any Applicable Laws and Regulations means such Applicable Laws and Regulations as amended, modified, codified, or reenacted, in whole or in part, and in effect from time to time, including, if applicable, rules and regulations promulgated thereunder; (5) unless expressly stated otherwise, reference to any Article, Section or Appendix means such Article of this LGIA or such Appendix to this LGIA, or such Section to the LGIP or such Appendix to the LGIP, as the case may be; (6) "hereunder", "hereof", "herein", "hereto" and words of similar import shall be deemed references to this LGIA as a whole and not to any particular Article or other provision hereof or thereof; (7) "including" (and with correlative meaning "include") means including without limiting the generality of any description preceding such term; and (8) relative to the determination of any period of time, "from" means "from and including", "to" means "to but excluding" and "through" means "through and including".

30.4 Entire Agreement. This LGIA, including all Appendices and Schedules attached hereto, constitutes the entire agreement between the Parties with reference to the subject matter hereof, and supersedes all prior and contemporaneous understandings or agreements, oral or written, between the Parties with respect to the subject matter of this LGIA. There are no other agreements, representations, warranties, or covenants which constitute any part of the consideration for, or any condition to, either Party's compliance with its obligations under this LGIA.

30.5 No Third Party Beneficiaries. This LGIA is not intended to and does not create rights, remedies, or benefits of any character whatsoever in favor of any persons, corporations, associations, or entities other than the Parties, and the obligations herein assumed are solely for the use and benefit of the Parties, their successors in interest and, where permitted, their assigns.

30.6 Waiver. The failure of a Party to this LGIA to insist, on any occasion, upon strict performance of any provision of this LGIA will not be considered a waiver of any obligation, right, or duty of, or imposed upon, such Party.

Any waiver at any time by either Party of its rights with respect to this LGIA shall not be deemed a continuing waiver or a waiver with respect to any other failure to comply with any other obligation, right, duty of this LGIA. Termination or Default of this LGIA for any reason by Interconnection Customer shall not constitute a waiver of Interconnection Customer's legal rights to obtain an interconnection from Transmission Provider. Any waiver of this LGIA shall, if requested, be provided in writing.

30.7 Headings. The descriptive headings of the various Articles of this LGIA have been inserted for convenience of reference only and are of no significance in the interpretation or construction of this LGIA.

30.8 Multiple Counterparts. This LGIA may be executed in two or more counterparts, each of which is deemed an original but all constitute one and the same instrument.

30.9 Amendment. The Parties may by mutual agreement amend this LGIA by a written instrument duly executed by the Parties.

30.10 Modification by the Parties. The Parties may by mutual agreement amend the Appendices to this LGIA by a written instrument duly executed by the Parties. Such amendment shall become effective and a part of this LGIA upon satisfaction of all Applicable Laws and Regulations.

30.11 Reservation of Rights. Transmission Provider shall have the right to make a unilateral filing with FERC to modify this LGIA with respect to any rates, terms and conditions, charges, classifications of service, rule or regulation under section 205 or any other applicable provision of the Federal Power Act and FERC's rules and regulations thereunder, and Interconnection Customer shall have the right to make a unilateral filing with FERC to modify this LGIA pursuant to section 206 or any other applicable provision of the Federal Power Act and FERC's rules and regulations thereunder; provided that each Party shall have the right to protest any such filing by the other Party and to participate fully in any proceeding before FERC in which such modifications may be considered. Nothing in this LGIA shall limit the rights of the Parties or of FERC under sections 205 or 206 of the Federal Power Act and FERC's rules and regulations thereunder, except to the extent that the Parties otherwise mutually agree as provided herein.

30.12 No Partnership. This LGIA shall not be interpreted or construed to create an association, joint venture, agency relationship, or partnership between the Parties or to impose any partnership obligation or partnership liability upon either Party. Neither Party shall have any right, power or authority to enter into any agreement or undertaking for, or act on behalf of, or to act as or be an agent or representative of, or to otherwise bind, the other Party.

IN WITNESS WHEREOF, the Parties have executed this LGIA in duplicate originals, each of which shall constitute and be an original effective Agreement between the Parties.

[Insert name of Transmission Provider or Transmission Owner, if applicable]

By: _____ By: _____

Title: _____ Title: _____

Date: _____ Date: _____

[Insert name of Interconnection Customer]

By: _____

Title: _____

Date: _____

Appendix A to LGIA

Interconnection Facilities, Network Upgrades and Distribution Upgrades

1. Interconnection Facilities:

(a) [insert Interconnection Customer's Interconnection Facilities]:

(b) [insert Transmission Provider's Interconnection Facilities]:

2. Network Upgrades:

(a) [insert Stand Alone Network Upgrades]:

(b) [insert Other Network Upgrades]:

3. Distribution Upgrades:

Appendix B to LGIA

Milestones

Appendix C to LGIA

Interconnection Details

Appendix D to LGIA

Security Arrangements Details

Infrastructure security of Transmission System equipment and operations and control hardware and software is essential to ensure day-to-day Transmission System reliability and operational security. FERC will expect all Transmission Providers, market participants, and Interconnection Customers interconnected to the Transmission System to comply with the recommendations offered by the President's Critical Infrastructure Protection Board and, eventually, best practice recommendations from the electric reliability authority. All public utilities will be expected to meet basic standards for system infrastructure and operational security, including physical, operational, and cyber-security practices.

Appendix E to LGIA

Commercial Operation Date

This Appendix E is a part of the LGIA between Transmission Provider and Interconnection Customer.

[Date]

[Transmission Provider Address]

Re: _____ Large Generating Facility

Dear _____:

On **[Date] [Interconnection Customer]** has completed Trial Operation of Unit No. ___. This letter confirms that [Interconnection Customer] commenced Commercial Operation of Unit No. ___ at the Large Generating Facility, effective as of **[Date plus one day]**.

Thank you.

[Signature]

[Interconnection Customer Representative]

Appendix F to LGIA

Addresses for Delivery of Notices and Billings

Notices:.

Transmission Provider:

[To be supplied.]

Interconnection Customer:

[To be supplied.]

Billings and Payments:

Transmission Provider:

[To be supplied.]

Interconnection Customer:

[To be supplied.]

Alternative Forms of Delivery of Notices (telephone, facsimile or email):

Transmission Provider:

[To be supplied.]

Interconnection Customer:

[To be supplied.]

Appendix G to LGIA

Interconnection Requirements For A Wind Generating Plant

Appendix G sets forth requirements and provisions specific to a wind generating plant. All other requirements of this LGIA continue to apply to wind generating plant interconnections.

A. Technical Standards Applicable to a Wind Generating Plant

i. Low Voltage Ride-Through (LVRT) Capability

A wind generating plant shall be able to remain online during voltage disturbances up to the time periods and associated voltage levels set forth in the standard below. The LVRT standard provides for a transition period standard and a post-transition period standard.

Transition Period LVRT Standard

The transition period standard applies to wind generating plants subject to FERC Order 661 that have either: (i) interconnection agreements signed and filed with the Commission, filed with the Commission in unexecuted form, or filed with the Commission as non-conforming agreements between January 1, 2006 and December 31, 2006, with a scheduled in-service date no later than December 31, 2007, or (ii) wind
generating turbines subject to a wind turbine procurement contract executed prior to December 31, 2005, for delivery through 2007.

1. Wind generating plants are required to remain in-service during three-phase faults with normal clearing (which is a time period of approximately 4 – 9 cycles) and single line to ground faults with delayed clearing, and subsequent post-fault voltage recovery to prefault voltage unless clearing the fault effectively disconnects the generator from the system. The clearing time requirement for a three-phase fault will be specific to the wind generating plant substation location, as determined by and documented by the

transmission provider. The maximum clearing time the wind generating plant shall be required to withstand for a three-phase fault shall be 9 cycles at a voltage as low as 0.15 p.u., as measured at the high side of the wind generating plant step-up transformer (i.e. the transformer that steps the voltage up to the transmission interconnection voltage or "GSU"), after which, if the fault remains following the location-specific normal clearing time for three-phase faults, the wind generating plant may disconnect from the transmission system.

2. This requirement does not apply to faults that would occur between the wind generator terminals and the high side of the GSU or to faults that would result in a voltage lower than 0.15 per unit on the high side of the GSU serving the facility.

3. Wind generating plants may be tripped after the fault period if this action is intended as part of a special protection system.

4. Wind generating plants may meet the LVRT requirements of this standard by the performance of the generators or by installing additional equipment (e.g., Static VAr Compensator, etc.) within the wind generating plant or by a combination of generator performance and additional equipment.

5. Existing individual generator units that are, or have been, interconnected to the network at the same location at the effective date of the Appendix G LVRT

   Standard are exempt from meeting the Appendix G LVRT Standard for the remaining life of the existing generation equipment. Existing individual generator units that are replaced are required to meet the Appendix G LVRT Standard.

Post-transition Period LVRT Standard

All wind generating plants subject to FERC Order No. 661 and not covered by the transition period described above must meet the following requirements:

1. Wind generating plants are required to remain in-service during three-phase faults with normal clearing (which is a time period of approximately 4 – 9 cycles) and single line to ground faults with delayed clearing, and subsequent post-fault voltage recovery to prefault voltage unless clearing the fault effectively disconnects the generator from the system. The clearing time requirement for a three-phase fault will be specific to the wind generating plant substation location, as determined by and documented by the transmission provider. The maximum clearing time the wind generating plant shall be required to withstand for a three-phase fault shall be 9 cycles after which, if the fault remains following the location-specific normal clearing time for three-phase faults, the wind generating plant may disconnect from the transmission system. A wind generating plant shall remain interconnected during such a fault on the transmission system for a voltage level as low as zero volts, as measured at the high voltage side of the wind GSU.
2. This requirement does not apply to faults that would occur between the wind generator terminals and the high side of the GSU.
3. Wind generating plants may be tripped after the fault period if this action is intended as part of a special protection system.
4. Wind generating plants may meet the LVRT requirements of this standard by the performance of the generators or by installing additional equipment (e.g., Static VAr Compensator) within the wind generating plant or by a combination of generator performance and additional equipment.

5. Existing individual generator units that are, or have been, interconnected to the network at the same location at the effective date of the Appendix G LVRT Standard are exempt from meeting the Appendix G LVRT Standard for the remaining life of the existing generation equipment. Existing individual generator units that are replaced are required to meet the Appendix G LVRT Standard.

ii. Power Factor Design Criteria (Reactive Power)

The following reactive power requirements apply only to a newly interconnecting wind generating plant that has executed a Facilities Study Agreement as of the effective date of the Final Rule establishing the reactive power requirements for non-synchronous generators in section 9.6.1 of this LGIA (Order No. 827). A wind generating plant to which this provision applies shall maintain a power factor within the range of 0.95 leading to 0.95 lagging, measured at the Point of Interconnection as defined in this LGIA, if the Transmission Provider's System Impact Study shows that such a requirement is necessary to ensure safety or reliability. The power factor range standard can be met by using, for example, power electronics designed to supply this level of reactive capability (taking into account any limitations due to voltage level, real power output, etc.) or fixed and switched capacitors if agreed to by the Transmission Provider, or a combination of the two. The Interconnection Customer shall not disable power factor equipment while the wind plant is in operation. Wind plants shall also be able to provide sufficient dynamic voltage support in lieu of the power system stabilizer and automatic voltage regulation at the generator excitation system if the System Impact Study shows this to be required for system safety or reliability.

iii. Supervisory Control and Data Acquisition (SCADA) Capability

The wind plant shall provide SCADA capability to transmit data and receive instructions from the Transmission Provider to protect system reliability. The Transmission Provider and the wind plant Interconnection Customer shall determine what SCADA information is essential for the proposed wind plant, taking into account the size of the plant and its characteristics, location, and importance in maintaining generation resource adequacy and transmission system reliability in its area.

APPENDIX 11 TO LGIP

Interconnection Procedures For A Wind Generating Plant

This Appendix 11 sets forth procedures specific to a wind generating plant. All other requirements of this LGIP continue to apply to wind generating plant interconnections.

A. Special Procedures Applicable to Wind Generators

The wind plant Interconnection Customer, in completing the Interconnection Request required by Section 4.4 of this LGIP, may provide to the Transmission Provider a set of preliminary electrical design specifications depicting the wind plant as a single equivalent generator. Upon satisfying these and other applicable Interconnection Request conditions, the wind plant may enter the queue and receive the base case data as provided for in this LGIP.

No later than six months after submitting an Interconnection Request completed in this manner, the wind plant Interconnection Customer must submit completed detailed electrical design specifications and other data (including collector system layout data) needed to allow the Transmission Provider to complete the System Impact Study.

APPENDIX 12 to the LGIP
GENERATION REPLACEMENT STUDY AGREEMENT

This **GENERATION REPLACEMENT STUDY AGREEMENT** is made and entered into this day of , 20___ ("Agreement") by and between , a organized and existing under the laws of the State of , ("Interconnection Customer,") and ____a existing under the laws of the State of _____, ("Transmission Provider""). Interconnection Customer and Transmission Provider each may be referred to as a "Party," or collectively as the "Parties."

RECITALS

WHEREAS, Interconnection Customer is evaluating replacing an Existing Generating Facility with a Replacement Generating Facility; and

WHEREAS, Interconnection Customer is proposing to evaluate Generation Replacement in accordance with Section 4.9 of the LGIP; and

WHEREAS, Interconnection Customer has submitted to Transmission Provider all information required under Section 4.9 of the LGIP, including an updated Appendix 3 for the Replacement Generating Facility; and

NOW, THEREFORE, in consideration of and subject to the mutual covenants contained herein the Parties agree as follows:

1.0 When used in this Agreement, with initial capitalization, the terms specified shall have the meanings indicated in Transmission Provider's FERC-approved LGIP.

2.0 Interconnection Customer elects and Transmission Provider shall cause a Replacement Impact Study, a Reliability Assessment Study, and a Generator Replacement Interconnection Facilities Study (if necessary) to be performed consistent with Section 4.9 of the LGIP and in accordance with the Tariff.

3.0 Interconnection Customer shall provide a deposit of fifty thousand dollars ($50,000.00) for the performance of the Replacement Impact Study, Reliability Assessment Study, and any Generator Replacement Interconnection Facilities Study (if required). Transmission Provider's good faith estimate for the time of completion of the Replacement Impact Study and Reliability Assessment Study is [insert date].

Upon receipt of the final study results, Transmission Provider shall charge, and Interconnection Customer shall pay the actual costs of the Replacement Impact Study, Reliability Assessment Study, and any Generator Replacement Interconnection Facilities Study (if required).

Any difference between the initial deposit and the actual cost of the study shall be paid by or refunded to Interconnection Customer, as appropriate.

4.0 Miscellaneous. This Generation Interconnection Replacement Study Agreement shall include standard miscellaneous terms including, but not limited to, indemnities, representations, disclaimers, warranties, governing law, amendment, execution, waiver, enforceability and assignment, that reflect best practices in the electric industry, and that are consistent with regional practices, Applicable Laws and Regulations, and the organizational nature of each Party. All of these provisions, to the extent practicable, shall be consistent with the provisions of the LGIP and the LGIA.

IN WITNESS WHEREOF, the Parties have caused this Agreement to be duly executed by their duly authorized officers or agents on the day and year first above written.

[Insert name of Transmission Provider or Transmission Owner, if applicable]

By: _____ By: _____
Title: _____Title: _____
Date: _____ Date: _____

[Insert name of Interconnection Customer]
By: _____
Title: _____
Date: _____

APPENDIX 13

Generator Replacement Coordinator

1. OVERVIEW

1.1 Purposes and Objectives

This Appendix 13 sets forth a framework whereby objective and verifiable assurance is provided to Interconnection Customers and the Federal Energy Regulatory Commission ("Commission") that Transmission Provider's Generation Replacement process under the Large Generator Interconnection Procedures of the Tariff ("LGIP") is administered in a nondiscriminatory manner consistent with reliability and Good Utility Practice. To achieve these objectives, the Transmission Provider will contract with a third party that meets the independence requirements described in this Appendix. This party, referred to herein as the Generator Replacement Coordinator ("GRC"), will implement the provisions of this Appendix by performing the functions set forth herein.

1.2 Applicability

The Transmission Provider, the GRC, and any Interconnection Customer that submits a Generation Replacement request shall be subject to the terms, conditions, and obligations of this Appendix.

1.3 Effective Date and Term

This Appendix 13 shall remain in effect for an Initial Term of three (3) years and shall continue in effect thereafter until terminated by an order of the Commission. After the Initial Term, Transmission Provider shall have the right to request termination of this Appendix 13 pursuant to Federal Power Act Section 205.

If, during the period of effectiveness of this Appendix 13, the agreement between the Transmission Provider and the GRC is terminated, Transmission Provider shall select a replacement GRC and provide notice to the Commission that such replacement GRC meets the qualifications of Section 2 of this Appendix.

1.4 Definitions

The capitalized terms used herein shall have the meaning ascribed to them in Section 1 of the LGIP. Capitalized terms not included in Section 1 of the LGIP shall be defined as follows:

Generation Replacement Coordinator ("GRC"): the party that meets the independence criteria of Section 2 and contracts with the Transmission Provider to implement the provisions of this Appendix 13.

Replacement Interconnection Studies: Collectively refers to Replacement Impact Studies, Reliability Assessment Studies, Generator Replacement Facility Studies.

2. GENERATION REPLACEMENT COORDINATOR

2.1 Retention of the Generation Replacement Coordinator

The Transmission Provider shall contract with an independent qualified party to be known as the Generation Replacement Coordinator (GRC). The GRC shall have experience and expertise appropriate to process and conduct Replacement Interconnection Studies. The Transmission Provider and the GRC shall negotiate the terms and conditions upon which the GRC will contract with the Transmission Provider. Nothing in this Appendix 13 shall be interpreted or construed as creating a partnership, joint venture, or fiduciary or agency relationship between the Transmission Provider and the GRC.

2.2 Independence of the GRC

2.2.1. To maintain independence, the GRC will satisfy and maintain compliance with the following criteria: (i) the GRC will not be an Interconnection Customer; (ii) the GRC, its employees and its board of directors will be prohibited from having a direct financial interest in any Interconnection Customer, the Transmission Provider, or their Affiliates; (iii) the GRC will not own any transmission, generation or distribution facilities in the region consisting of the Transmission Provider's Balancing Area and first tier Balancing Areas or any of the Transmission Provider's Affiliates; and (iv) the GRC's decision making process will be independent of control by an Interconnection Customer, the Transmission Provider, or their Affiliates. The GRC shall exercise independent decision-making in performing all activities associated with its responsibilities under this Appendix 13. The GRC shall maintain its offices separate from the offices of the Transmission Provider and its Affiliates. No employees of the GRC shall share office space with any employee of an Interconnection Customer, the Transmission Provider, or their Affiliates.

2.2.2. To further ensure the independence of the GRC and meet the objectives established in this Appendix, the GRC will have the authority to collect and analyze data relevant to its responsibilities and submit reports directly to the Commission. In response to the GRC's reports to the Commission that fall within the scope of this Appendix 13, the Transmission Provider may submit comments on the report to the Commission.

2.3 Standards of Conduct and Conflicts of Interest

2.3.1. All employees of the GRC performing functions under this Appendix 13 shall be treated, for purposes of the Commission's Standards of Conduct set forth in 18 C.F.R. § 358 as the equivalent of transmission function employees of the Transmission Provider.

2.3.2. The GRC shall adopt a policy on conflicts of interest establishing appropriate standards for the professional and financial independence of the GRC from Transmission Provider and its Affiliates, consistent with Commission policies and regulations. In addition, the GRC

shall adopt ethics policies and standards for its employees and subcontractors working on the Transmission Provider's Generation Replacement process. The GRC, including each employee performing functions under this Appendix 13, shall comply at all times with the conflicts of interest and ethics policies. The GRC shall certify such compliance to the Commission and the Transmission Provider prior to issuing its first Replacement Interconnection Study and upon request by the Commission.

3. GENERATION REPLACEMENT COORDINATIOR FUNCTIONS

3.1 The GRC's Administration of the Generation Replacement Process

The GRC shall administer the Generation Replacement process included as LGIP Section 4.9.

3.2 The GRC's Specific Generation Replacement Responsibilities

The GRC will process and evaluate all Generation Replacement requests on a nondiscriminatory basis consistent with LGIP Section 4.9. In processing and evaluating Generation Replacement requests, the GRC's responsibilities include the following:

(1) Collecting from the Interconnection Customer and the Transmission Provider all information necessary for the processing and evaluation of a Generation Replacement request.

(2) Determining that all preconditions necessary for a valid Generation Replacement request have been met;

(3) Determining whether some or all of the service subject to a Generation Replacement request must be processed as a new request for Interconnection Service.

(4) Maintaining a queue for Generation Replacement requests;

(5) Performing the necessary Replacement Interconnection Studies;

(6) Providing to the Transmission Provider for the Transmission Provider to post on its OASIS in a timely fashion (and without modification by the Transmission Provider) for each Generation Replacement, information regarding the expected Commercial Operation Date of the Replacement Generating Facility, and the type of requested Interconnection Service;

(7) Providing all notices related to the processing and evaluation of a Generation Replacement request to the Interconnection Customer;

(8) Independently reviewing and validating data, information, and analyses provided by Transmission Provider to GRC in connection with Generation Replacement process;

(9) Responding to inquiries from an Interconnection Customer in connection with its Generator Replacement request; and

(10) Providing a copy of each final study report, along with the underlying study, to the Transmission Provider.

3.3 The Transmission Provider's Duties and Responsibilities

Other than the functions pursuant to LGIP Section 4.9 performed by the GRC, as described in Section 3.2 of this Appendix 13, Transmission Provider will continue to administer, and perform all Transmission Provider functions pursuant to, its Tariff. In addition, Transmission Provider shall perform the following functions referenced in LGIP Section 4.9:

(1) Providing the data, information, and analyses (as well as updates, changes, or additions to such data, information, and analyses) required by the GRC to perform Replacement Interconnection Studies and to process Generator Replacement requests, ("Required Information");

(2) Posting to OASIS (as provided by the GRC and without modification by the Transmission Provider) for each Generation Replacement, information regarding the expected Commercial Operation Date of the Replacement Generating Facility and the type of requested Interconnection Service; and

(3) Whenever the GRC determines that some or all of a Generation Replacement request must be processed as a new request for Interconnection Service, Transmission Provider shall process the new request for Interconnection Service pursuant to the LGIP provisions applicable to a new request for Interconnection Service.

4. COORDINATION BETWEEN TRANSMISSION PROVIDER AND THE GRC

4.1 General

4.1.1. Transmission Provider and the GRC will coordinate as necessary for the GRC to perform its functions.

4.1.2. Whenever Transmission Provider provides Required Information to the GRC, the Transmission Provider shall supply such Required Information using Good Utility Practice and its knowledge of the Transmission System to provide the Required Information in a manner consistent with its obligation to respond to Generation Replacement requests on a nondiscriminatory basis. Upon receiving Required Information, the GRC shall use its independent judgment to review the information and determine whether the information satisfies applicable Tariff requirements and is otherwise consistent with the requirement to respond to Generation Replacement requests on a nondiscriminatory basis.

4.1.3. The GRC shall use its independent judgment to determine whether additional, updated, or modified Required Information is required by the GRC to perform Replacement Interconnection Studies and to process Generator Replacement requests.

4.2 Dispute Resolution

4.2.1. If (i) the GRC believes that the Required Information provided by the Transmission Provider is insufficient, and (ii) the Transmission Provider disagrees, then GRC and Transmission Provider shall meet and confer in an effort to resolve the matter. Both parties shall have an obligation to use reasonable efforts to resolve the dispute expeditiously.

4.2.2. If the dispute cannot be resolved informally and relates to a matter that affects multiple current or future Interconnection Customers, then the GRC shall take all reasonable steps, on an expeditious basis, to refer the dispute to the Commission's Dispute Resolution Service or its successor entity.

4.2.3. If the dispute cannot be resolved informally and relates to a specific Generator Replacement request, then the GRC shall seek to resolve the matter expeditiously by meeting with the affected Interconnection Customer and the Transmission Provider. Following this meeting, if the matter cannot be resolved informally, then any of the Interconnection Customer, Transmission Provider, or the GRC may refer the dispute to the Commission's Dispute Resolution Service.

4.2.4. Nothing in this Section 4.2 shall restrict the right of an Interconnection Customer to (i) request that the Commission's Dispute Resolution Service attempt to resolve a dispute, or (ii) submit a complaint pursuant to FPA Section 206.

5. ERO COMPLIANCE

The GRC will perform its functions under this Appendix 13 in accordance with the NERC TPL-001 Reliability Standard (or subsequent standards), the Transmission Provider's TPL Philosophy Document (as applicable), Transmission Provider's Transmission Planning Summary, and the Transmission Provider's Facility Connection Requirements. These documents specify the criteria used by the Transmission Provider to assess the reliability of all proposed interconnection requests to ensure compliance with required NERC Reliability Standards and the Transmission Provider's OATT. The Transmission will provide these documents to the GRC and update them as necessary.

6. DATA COLLECTION AND DISCLOSURE

6.1 Access to Transmission Provider's Data and Information

6.1.1. To the extent the GRC requests access to Required Information from the Transmission Provider that was originally provided to the Transmission Provider

by a third-party, then that Required Information shall be treated as Confidential Information, unless the information already is available from a public source or is otherwise subject to disclosure pursuant to any tariff or agreement administered by the Transmission Provider.

6.1.2. To the extent Transmission Provider considers Required Information requested by the GRC to be Confidential Information, Transmission Provider shall provide the Required Information to the GRC but may designate the data or other information to be Confidential Information pursuant to Section 12.1 of this Appendix 13.

6.1.3. To the extent Transmission Provider considers Required Information requested by the GRC to be subject to a legal privilege, the Transmission Provider may notify the GRC of the applicable legal privilege and may withhold the data or other information from the GRC.

6.1.4. In the event that a dispute arises over access to data or information, either the Transmission Provider or GRC may refer the matter to the Commission's Dispute Resolution Service.

6.2 Access to Data and Information of Interconnection Customers

6.2.1. Data Requests

If the GRC determines that additional data or other information is required to accomplish the objectives of this Appendix 13, the GRC may request such information from the Interconnection Customer. Any such request shall be accompanied by an explanation of the need for such data or other information, and, to the extent the data qualifies as Confidential Information, an acknowledgment of the obligation of the GRC to maintain the confidentiality of the data. All information provided to the GRC by Interconnection Customers that has been labeled as confidential by an Interconnection Customer, shall be treated as Confidential Information, unless already available from a public source or otherwise subject to disclosure under any tariff or agreement administered by the Transmission Provider.

6.2.2. Enforcement of Data Requests

Any Interconnection Customer receiving an information request from the GRC shall furnish all information, in the requested form or format that is reasonably necessary to achieve the purposes or objectives of this Appendix 13, whenever the requested information is not readily available from some other source that is more convenient, less burdensome and less expensive, and not subject to a legal privilege. No party that is the subject of a data request shall be required to produce any summaries, analyses, or reports of the data that do not exist at the time of the data request. In the event that a dispute arises over access to data or information, either the Interconnection Customer or the GRC may refer the dispute to the Commission's Dispute Resolution Service.

6.3 Confidentiality

The GRC shall use all reasonable procedures necessary to protect and to preserve the confidentiality of Confidential Information obtained pursuant to this Appendix 13. Except as may be required by subpoena or other compulsory process, the GRC shall not disclose Confidential Information to any person or entity without prior written consent of the party supplying the Confidential Information. To the extent the GRC requires access to Confidential Information obtained by Transmission Provider from third parties, the GRC shall not disclose the Confidential Information to any person or entity without prior written consent of the party supplying the Confidential Information to the Transmission Provider, except as may be required by subpoena or other compulsory process. Upon receipt of a subpoena or other compulsory process for the disclosure of Confidential Information, the GRC shall promptly notify the party that provided the data and shall provide all reasonable assistance requested by the party to prevent disclosure, and shall not release the data until the party provides written consent or until the party's legal avenues are exhausted. The confidentiality of data and information provided to the Commission shall be maintained with a protective order or other procedures of the agency for protecting Confidential Information.

6.4 Access to Data by the Commission

The GRC shall provide data, information, or reports relating to Transmission Provider's Generation Replacement process to the Commission upon request, with a copy provided to the Transmission Provider. Notwithstanding anything in this Section 6 to the contrary, if the Commission or its staff, during the course of an investigation or otherwise, request information from the GRC that the GRC is otherwise required to maintain in confidence pursuant to this Appendix, the GRC shall provide the requested information to the Commission or its staff, within the time provided for in the request for information. In providing the information to the Commission or its staff, the GRC may, consistent with 18 C.F.R. § 388.112, request that the information be treated as confidential and non-public by the Commission and its staff and that the information be withheld from public disclosure. The GRC shall notify the party from whom the information was obtained when the GRC is notified by Commission or its staff that a request for public disclosure of, or decision to publicly disclose, confidential information has been received, at which time either the GRC or the party may respond before such information is made public, pursuant to 18 C.F.R. § 388.112.

6.5 Collection and Retention of Information

The GRC shall regularly collect and maintain the information necessary for implementing this Appendix. The GRC shall ensure that data and information necessary to carry out its duties is retained in usable form and shall be turned over to any successor GRC consistent with Section 6.3 of this Appendix 13. The GRC shall adopt policies and procedures for the retention of information provided by Interconnection Customers. At the end of the applicable retention period, the GRC shall provide the data and information

to the Transmission Provider. The Transmission Provider shall retain that information consistent with the applicable Commission and NERC document retention requirements.

7. BUDGETING AND FUNDING

The GRC and the Transmission Provider shall reach agreement on budgeting and funding the GRC's functions under this Appendix 13 to ensure, among other things, that the GRC has sufficient funding to discharge its responsibilities and obligations as GRC and that the terms of payment of the GRC by the Transmission Provider do not result in inappropriate incentives to favor the Transmission Provider or any Interconnection Customer over the interests of another. If a dispute arises over the budgeting or funding of the GRC, either party may refer the matter to the Commission's Dispute Resolution Service.

8. RIGHTS AND REMEDIES

8.1 With the exception of the limitation of liability provisions agreed to by the GRC and the Transmission Provider, nothing herein shall prevent the Transmission Provider or any other person or entity from asserting any rights it may have under the Federal Power Act or any other applicable law, statute, or regulation, including the filing of a petition with or otherwise initiating a proceeding before the Commission regarding any matter that is the subject of this Appendix 13.

8.2 An Interconnection Customer may submit a complaint under Section 206 of the Federal Power Act if it believes that the GRC or Transmission Provider is performing its functions in a manner inconsistent with this Appendix or is otherwise acting in manner inconsistent with any rule, regulation or policy adopted by the Commission.

ATTACHMENT L

THE NORTH AMERICAN ELECTRIC RELIABILITY CORPORATION TRANSMISSION LOADING RELIEF PROCEDURES AND PROCEDURES FOR ADDRESSING PARALLEL FLOWS

The North American Electric Reliability Corporation's ("NERC")'s Transmission Loading Relief ("TLR") Procedures originally filed March 18, 1998, which are now the mandatory Reliability Standards that address TLR, and any amendments thereto, on file and accepted by the Commission, are hereby incorporated and made part of this tariff. See www.nerc.com for the current version of the NERC's TLR Procedures.

Notice of Adoption of Local Transmission Loading Relief Procedure in DEP Zone

Pursuant to NERC Reliability Standard IRO-006-3 – Reliability Coordination – TLR, R2, DEP adopts a local TLR procedure that will be used to supplement the current NERC TLR Procedures.

DEP will implement this procedure with neighbors signing an agreement agreeing to the local procedure. DEP will use the current NERC TLR Procedure that has a 5% Transfer Distribution Factor ("TDF") for determining Non-Firm schedule curtailment.

If the NERC TLR Procedure (NERC Standard IRO-006-3) does not provide the required relief from Non-Firm schedules, then the parties will curtail Non-Firm schedules down to 3% TDF in accordance with local procedures as described in section R2 of the NERC TLR Standard.

This will be done for any tagged schedule that has a 3% TDF that can provide relief on the flowgate, where either DEP or the reciprocal party is a source or sink for the schedule.

If any schedules are identified that curtailment will provide relief on the flowgate, then that party will curtail the schedules until the flow is reduced on the flowgate or all of the schedules have been curtailed.

The local transmission loading relief procedure described above shall be used to supplement, and not as a substitute for, the Interconnection-wide procedure. The parties agree that they will comply with the NERC TLR Procedure and all NERC Reliability Standards at all times.

ATTACHMENT M

SMALL GENERATOR INTERCONNECTION PROCEDURES (SGIP)

(For Generating Facilities No Larger Than 20 MW)

TABLE OF CONTENTS

Section 1. Application
- 1.1 Applicability
- 1.2 Pre-Application
- 1.3 Interconnection Request
- 1.4 Modification of the Interconnection Request
- 1.5 Site Control
- 1.6 Queue Position
- 1.7 Interconnection Requests Submitted Prior to the Effective Date of the SGIP

Section 2. Fast Track Process
- 2.1 Applicability
- 2.2 Initial Review
  - 2.2.1 Screens
- 2.3 Customer Options Meeting
- 2.4 Supplemental Review

Section 3. Study Process
- 3.1 Applicability
- 3.2 Scoping Meeting
- 3.3 Feasibility Study
- 3.4 System Impact Study
- 3.5 Facilities Study

Section 4. Provisions that Apply to All Interconnection Requests
- 4.1 Reasonable Efforts
- 4.2 Disputes
- 4.3 Interconnection Metering
- 4.4 Commissioning
- 4.5 Confidentiality
- 4.6 Comparability
- 4.7 Record Retention
- 4.8 Interconnection Agreement
- 4.9 Coordination with Affected Systems
- 4.10 Capacity of the Small Generating Facility

Attachment 1 - Glossary of Terms

Attachment 2 - Small Generator Interconnection Request

Attachment 3 - Certification Codes and Standards

Attachment 4 - Certification of Small Generator Equipment Packages

Attachment 5 - Application, Procedures, and Terms and Conditions for Interconnecting a Certified Inverter-Based Small Generating Facility No Larger than 10 kW ("10 kW Inverter Process") .....
Attachment 6 - Feasibility Study Agreement.....
Attachment 7 - System Impact Study Agreement.....
Attachment 8 - Facilities Study Agreement.....
Attachment 9 - Small Generator Interconnection Agreement .....

Section 1. Application

1.1 Applicability

1.1.1 A request to interconnect a certified Small Generating Facility (See Attachments 3 and 4 for description of certification criteria) to the Transmission Provider's Distribution System shall be evaluated under the section 2 Fast Track Process if the eligibility requirements of section 2.1 are met. A request to interconnect a certified inverter-based Small Generating Facility no larger than 10 kilowatts (kW) shall be evaluated under the Attachment 5 10 kW Inverter Process. A request to interconnect a Small Generating Facility no larger than 20 megawatts (MW) that does not meet the eligibility requirements of section 2.1, or does not pass the Fast Track Process or the 10 kW Inverter Process, shall be evaluated under the section 3 Study Process. If the Interconnection Customer wishes to interconnect its Small Generating Facility using Network Resource Interconnection Service, it must do so under the Standard Large Generator Interconnection Procedures and execute the Standard Large Generator Interconnection Agreement.

1.1.2 Capitalized terms used herein shall have the meanings specified in the Glossary of Terms in Attachment 1 or the body of these procedures.

1.1.3 Neither these procedures nor the requirements included hereunder apply to Small Generating Facilities interconnected or approved for interconnection prior to 60 Business Days after the effective date of these procedures.

1.1.4 Prior to submitting its Interconnection Request (Attachment 2), the Interconnection Customer may ask the Transmission Provider's interconnection contact employee or office whether the proposed interconnection is subject to these procedures. The Transmission Provider shall respond within 15 Business Days.

1.1.5 Infrastructure security of electric system equipment and operations and control hardware and software is essential to ensure day-to-day reliability and operational security. The Federal Energy Regulatory Commission expects all Transmission Providers, market participants, and Interconnection Customers interconnected with electric systems to comply with the recommendations offered by the President's Critical Infrastructure Protection Board and best practice recommendations from the electric reliability authority. All public utilities are expected to meet basic standards for electric system infrastructure and operational security, including physical, operational, and cyber-security practices.

1.1.6 References in these procedures to interconnection agreement are to the Small Generator Interconnection Agreement (SGIA).

1.2 Pre-Application

1.2.1 The Transmission Provider shall designate an employee or office from which information on the application process and on an Affected System can be obtained through informal requests from the Interconnection Customer presenting a proposed project for a specific site. The name, telephone number, and e-mail address of such contact employee or office shall be made available on the Transmission Provider's Internet web site. Electric system information provided to the Interconnection Customer should include relevant system studies, interconnection studies, and other materials useful to an understanding of an interconnection at a particular point on the Transmission Provider's Transmission System, to the extent such provision does not violate confidentiality provisions of prior agreements or critical infrastructure requirements. The Transmission Provider shall comply with reasonable requests for such information.

1.2.2 In addition to the information in section 1.2.1, which may be provided in response to an informal request, an Interconnection Customer may submit a formal written request form along with a non-refundable fee of $300 for a pre-application report on a proposed project at a specific site. The Transmission Provider shall provide the pre-application data described in section 1.2.3 to the Interconnection Customer within 20 Business Days of receipt of the completed request form and payment of the $300 fee. The pre-application report produced by the Transmission Provider is non-binding, does not confer any rights, and the Interconnection Customer must still successfully apply to interconnect to the Transmission Provider’s system. The written pre-application report request form shall include the information in sections 1.2.2.1 through 1.2.2.8 below to clearly and sufficiently identify the location of the proposed Point of Interconnection.

1.2.2.1 Project contact information, including name, address, phone number, and email address.

1.2.2.2 Project location (street address with nearby cross streets and town)

1.2.2.3 Meter number, pole number, or other equivalent information identifying proposed Point of Interconnection, if available.

1.2.2.4 Generator Type (e.g., solar, wind, combined heat and power, etc.)

1.2.2.5 Size (alternating current kW)

1.2.2.6 Single or three phase generator configuration

1.2.2.7 Stand-alone generator (no onsite load, not including station service – Yes or No?)

1.2.2.8 Is new service requested? Yes or No? If there is existing service, include the customer account number, site minimum and maximum current or proposed electric loads in kW (if available) and specify if the load is expected to change.

1.2.3. Using the information provided in the pre-application report request form in section 1.2.2, the Transmission Provider will identify the substation/area bus, bank or circuit likely to serve the proposed Point of Interconnection. This selection by the Transmission Provider does not necessarily indicate, after application of the screens and/or study, that this would be the circuit the project ultimately connects to. The Interconnection Customer must request additional pre-application reports if information about multiple Points of Interconnection is requested. Subject to section 1.2.4, the pre-application report will include the following information:

1.2.3.1 Total capacity (in MW) of substation/area bus, bank or circuit based on normal or operating ratings likely to serve the proposed Point of Interconnection.

1.2.3.2 Existing aggregate generation capacity (in MW) interconnected to a substation/area bus, bank or circuit (i.e., amount of generation online) likely to serve the proposed Point of Interconnection.

1.2.3.3 Aggregate queued generation capacity (in MW) for a substation/area bus, bank or circuit (i.e., amount of generation in the queue) likely to serve the proposed Point of Interconnection.

1.2.3.4 Available capacity (in MW) of substation/area bus or bank and circuit likely to serve the proposed Point of Interconnection (i.e., total capacity less the sum of existing aggregate generation capacity and aggregate queued generation capacity).

1.2.3.5 Substation nominal distribution voltage and/or transmission nominal voltage if applicable.

1.2.3.6 Nominal distribution circuit voltage at the proposed Point of Interconnection.

1.2.3.7 Approximate circuit distance between the proposed Point of Interconnection and the substation.

1.2.3.8 Relevant line section(s) actual or estimated peak load and minimum load data, including daytime minimum load as described in section 2.4.4.1.1 below and absolute minimum load, when available.

1.2.3.9 Number and rating of protective devices and number and type (standard, bi-directional) of voltage regulating devices between the proposed Point of

Interconnection and the substation/area. Identify whether the substation has a load tap changer.

1.2.3.10 Number of phases available at the proposed Point of Interconnection. If a single phase, distance from the three-phase circuit.

1.2.3.11 Limiting conductor ratings from the proposed Point of Interconnection to the distribution substation.

1.2.3.12 Whether the Point of Interconnection is located on a spot network, grid network, or radial supply.

1.2.3.13 Based on the proposed Point of Interconnection, existing or known constraints such as, but not limited to, electrical dependencies at that location, short circuit interrupting capacity issues, power quality or stability issues on the circuit, capacity constraints, or secondary networks.

1.2.4 The pre-application report need only include existing data. A pre-application report request does not obligate the Transmission Provider to conduct a study or other analysis of the proposed generator in the event that data is not readily available. If the Transmission Provider cannot complete all or some of a pre-application report due to lack of available data, the Transmission Provider shall provide the Interconnection Customer with a pre-application report that includes the data that is available. The provision of information on "available capacity" pursuant to section 1.2.3.4 does not imply that an interconnection up to this level may be completed without impacts since there are many variables studied as part of the interconnection review process, and data provided in the pre-application report may become outdated at the time of the submission of the complete Interconnection Request. Notwithstanding any of the provisions of this section, the Transmission Provider shall, in good faith, include data in the pre-application report that represents the best available information at the time of reporting.

1.3 Interconnection Request

The Interconnection Customer shall submit its Interconnection Request to the Transmission Provider, together with the processing fee or deposit specified in the Interconnection Request. The Interconnection Request shall be date- and time-stamped upon receipt. The original date- and time-stamp applied to the Interconnection Request at the time of its original submission shall be accepted as the qualifying date- and time-stamp for the purposes of any timetable in these procedures. The Interconnection Customer shall be notified of receipt by the Transmission Provider within three Business Days of receiving the Interconnection Request. The Transmission Provider shall notify the Interconnection Customer within ten Business Days of the receipt of the Interconnection Request as to whether the Interconnection Request is complete or incomplete. If the Interconnection Request is incomplete, the Transmission Provider shall provide along with the notice that the Interconnection Request is incomplete, a written list detailing all information that must be provided to complete the Interconnection Request. The Interconnection Customer will have ten Business Days after receipt of the notice to submit the listed information or to request an extension of

time to provide such information. If the Interconnection Customer does not provide the listed information or a request for an extension of time within the deadline, the Interconnection Request will be deemed withdrawn. An Interconnection Request will be deemed complete upon submission of the listed information to the Transmission Provider.

1.4 Modification of the Interconnection Request

Any modification to machine data or equipment configuration or to the interconnection site of the Small Generating Facility not agreed to in writing by the Transmission Provider and the Interconnection Customer may be deemed a withdrawal of the Interconnection Request and may require submission of a new Interconnection Request, unless proper notification of each Party by the other and a reasonable time to cure the problems created by the changes are undertaken.

1.5 Site Control

Documentation of site control must be submitted with the Interconnection Request. Site control may be demonstrated through:

1.5.1 Ownership of, a leasehold interest in, or a right to develop a site for the purpose of constructing the Small Generating Facility;

1.5.2 An option to purchase or acquire a leasehold site for such purpose; or

1.5.3 An exclusivity or other business relationship between the Interconnection Customer and the entity having the right to sell, lease, or grant the Interconnection Customer the right to possess or occupy a site for such purpose.

1.6 Queue Position

The Transmission Provider shall assign a Queue Position based upon the date- and time-stamp of the Interconnection Request. The Queue Position of each Interconnection Request will be used to determine the cost responsibility for the Upgrades necessary to accommodate the interconnection. The Transmission Provider shall maintain a single queue per geographic region. At the Transmission Provider's option, Interconnection Requests may be studied serially or in clusters for the purpose of the system impact study.

1.7 Interconnection Requests Submitted Prior to the Effective Date of the SGIP

Nothing in this SGIP affects an Interconnection Customer's Queue Position assigned before the effective date of this SGIP. The Parties agree to complete work on any interconnection study agreement executed prior the effective date of this SGIP in accordance with the terms and conditions of that interconnection study agreement. Any new studies or other additional work will be completed pursuant to this SGIP.

Section 2. Fast Track Process

2.1 Applicability

The Fast Track Process is available to an Interconnection Customer proposing to interconnect its Small Generating Facility with the Transmission Provider's Distribution System if the Small Generating Facility's capacity does not exceed the size limits identified in the table below. Small Generating Facilities below these limits are eligible for Fast Track review. However, Fast Track eligibility is distinct from the Fast Track Process itself, and eligibility does not imply or indicate that a Small Generating Facility will pass the Fast Track screens in section 2.2.1 below or the Supplemental Review screens in section 2.4.1 below.

Fast Track eligibility is determined based upon the generator type, the size of the generator, voltage of the line and the location of and the type of line at the Point of Interconnection. All Small Generating Facilities connecting to lines greater than 69 kilovolt (kV) are ineligible for the Fast Track Process regardless of size. All synchronous and induction machines must be no larger than 2 MW to be eligible for the Fast Track Process, regardless of location. For certified inverter-based systems, the size limit varies according to the voltage of the line at the proposed Point of Interconnection. Certified inverter-based Small Generating Facilities located within 2.5 electrical circuit miles of a substation and on a mainline (as defined in the table below) are eligible for the Fast Track Process under the higher thresholds according to the table below. In addition to the size threshold,the Interconnection Customer's proposed Small Generating Facility must meet the codes, standards, and certification requirements of Attachments 3 and 4 of these procedures, or the Transmission Provider has to have reviewed the design or tested the proposed Small Generating Facility and is satisfied that it is safe to operate.

	Fast Track Eligibility for Inverter-Based Systems	
Line Voltage	Fast Track Eligibility Regardless of Location	Fast Track Eligibility on a Mainline[1] and ≤ 2.5 Electrical Circuit Miles from Substation[2]
< 5 kV	≤ 500 kW	≤ 500 kW
≥ 5 kV and < 15 kV	≤ 2 MW	≤ 3 MW
≥ 15 kV and < 30 kV	≤ 3 MW	≤ 4 MW
≥ 30 kV and ≤ 69 kV	≤ 4 MW	≤ 5 MW

2.2 Initial Review

Within 15 Business Days after the Transmission Provider notifies the Interconnection Customer it has received a complete Interconnection Request, the Transmission Provider shall perform an initial review using the screens set forth below, shall notify the Interconnection Customer of the results, and include with the notification copies of the analysis and data underlying the Transmission Provider's determinations under the screens.

2.2.1 Screens

2.2.1.1 The proposed Small Generating Facility's Point of Interconnection must be on a portion of the Transmission Provider's Distribution System that is subject to the Tariff.

2.2.1.2 For interconnection of a proposed Small Generating Facility to a radial distribution circuit, the aggregated generation, including the proposed Small Generating Facility, on the circuit shall not exceed 15 % of the line section annual peak load as most recently measured at the substation. A line section is that portion of a Transmission Provider's electric system connected to a customer

[1] For purposes of this table, a mainline is the three-phase backbone of a circuit. It will typically constitute lines with wire sizes of 4/0 American wire gauge, 336.4 kcmil, 397.5 kcmil, 477 kcmil and 795 kcmil.

[2] An Interconnection Customer can determine this information about its proposed interconnection location in advance by requesting a pre-application report pursuant to section 1.2.

bounded by automatic sectionalizing devices or the end of the distribution line.

2.2.1.3 For interconnection of a proposed Small Generating Facility to the load side of spot network protectors, the proposed Small Generating Facility must utilize an inverter-based equipment package and, together with the aggregated other inverter-based generation, shall not exceed the smaller of 5 % of a spot network's maximum load or 50 kW.[1]

2.2.1.4 The proposed Small Generating Facility, in aggregation with other generation on the distribution circuit, shall not contribute more than 10 % to the distribution circuit's maximum fault current at the point on the high voltage (primary) level nearest the proposed point of change of ownership.

2.2.1.5 The proposed Small Generating Facility, in aggregate with other generation on the distribution circuit, shall not cause any distribution protective devices and equipment (including, but not limited to, substation breakers, fuse cutouts, and line reclosers), or Interconnection Customer equipment on the system to exceed 87.5 % of the short circuit interrupting capability; nor shall the interconnection be proposed for a circuit that already exceeds 87.5 % of the short circuit interrupting capability.

2.2.1.6 Using the table below, determine the type of interconnection to a primary distribution line. This screen includes a review of the type of electrical service provided to the Interconnecting Customer, including line configuration and the transformer connection to limit the potential for creating over-voltages on the Transmission Provider's electric power system due to a loss of ground during the operating time of any anti-islanding function.

Primary Distribution Line Type	**Type of Interconnection to Primary Distribution Line**	**Result/Criteria**
Three-phase, three wire	3-phase or single phase, phase-to-phase	Pass screen
Three-phase, four wire	Effectively-grounded 3 phase or Single-phase, line-to-neutral	Pass screen

---

[3] A spot Network is a type of distribution system found within modern commercial buildings to provide high reliability of service to a single customer. (Standard Handbook for Electrical Engineers, 11th edition, Donald Fink, McGraw Hill Book Company)

2.2.1.7 If the proposed Small Generating Facility is to be interconnected on single-phase shared secondary, the aggregate generation capacity on the shared secondary, including the proposed Small Generating Facility, shall not exceed 20 kW.

2.2.1.8 If the proposed Small Generating Facility is single-phase and is to be interconnected on a center tap neutral of a 240 volt service, its addition shall not create an imbalance between the two sides of the 240 volt service of more than 20 % of the nameplate rating of the service transformer.

2.2.1.9 The Small Generating Facility, in aggregate with other generation interconnected to the transmission side of a substation transformer feeding the circuit where the Small Generating Facility proposes to interconnect shall not exceed 10 MW in an area where there are known, or posted, transient stability limitations to generating units located in the general electrical vicinity (e.g., three or four transmission busses from the point of interconnection).

2.2.1.10 No construction of facilities by the Transmission Provider on its own system shall be required to accommodate the Small Generating Facility.

2.2.2 If the proposed interconnection passes the screens, the Interconnection Request shall be approved and the Transmission Provider will provide the Interconnection Customer an executable interconnection agreement within five Business Days after the determination.

2.2.3 If the proposed interconnection fails the screens, but the Transmission Provider determines that the Small Generating Facility may nevertheless be interconnected consistent with safety, reliability, and power quality standards, the Transmission Provider shall provide the Interconnection Customer an executable interconnection agreement within five Business Days after the determination.

2.2.4 If the proposed interconnection fails the screens, and the Transmission Provider does not or cannot determine from the initial review that the Small Generating Facility may nevertheless be interconnected consistent with safety, reliability, and power quality standards unless the Interconnection Customer is willing to consider minor modifications or further study, the Transmission Provider shall provide the Interconnection Customer with the opportunity to attend a customer options meeting.

2.3 Customer Options Meeting

If the Transmission Provider determines the Interconnection Request cannot be approved without (1) minor modifications at minimal cost, (2) a supplemental study or other additional studies or actions, or (3) incurring significant cost to address safety, reliability, or power quality problems, the Transmission Provider shall notify the Interconnection

Customer of that determination within five Business Days after the determination and provide copies of all data and analyses underlying its conclusion. Within ten Business Days of the Transmission Provider's determination, the Transmission Provider shall offer to convene a customer options meeting with the Transmission Provider to review possible Interconnection Customer facility modifications or the screen analysis and related results, to determine what further steps are needed to permit the Small Generating Facility to be connected safely and reliably. At the time of notification of the Transmission Provider's determination, or at the customer options meeting, the Transmission Provider shall:

2.3.1 Offer to perform facility modifications or minor modifications to the Transmission Provider's electric system (e.g., changing meters, fuses, relay settings) and provide a non-binding good faith estimate of the limited cost to make such modifications to the Transmission Provider's electric system. If the Interconnection Customer agrees to pay for the modifications to the Transmission Provider's electric system, the Transmission Provider will provide the Interconnection Customer with an executable interconnection agreement within ten Business Days of the customer options meeting; or

2.3.2 Offer to perform a supplemental review in accordance with section 2.4 and provide a non-binding good faith estimate of the costs of such review; or

2.3.3 Obtain the Interconnection Customer's agreement to continue evaluating the Interconnection Request under the section 3 Study Process.

2.4 Supplemental Review

2.4.1 To accept the offer of a supplemental review, the Interconnection Customer shall agree in writing and submit a deposit for the estimated costs of the supplemental review in the amount of the Transmission Provider's good faith estimate of the costs of such review, both within 15 Business Days of the offer. If the written agreement and deposit have not been received by the Transmission Provider within that timeframe, the Interconnection Request shall continue to be evaluated under the section 3 Study Process unless it is withdrawn by the Interconnection Customer.

2.4.2 The Interconnection Customer may specify the order in which the Transmission Provider will complete the screens in section 2.4.4.

2.4.3 The Interconnection Customer shall be responsible for the Transmission Provider's actual costs for conducting the supplemental review. The Interconnection Customer must pay any review costs that exceed the deposit within 20 Business Days of receipt of the invoice or resolution of any dispute. If the deposit exceeds the invoiced costs, the Transmission Provider will return such excess within 20 Business Days of the invoice without interest.

2.4.4 Within 30 Business Days following receipt of the deposit for a supplemental review, the Transmission Provider shall (1) perform a supplemental review using

the screens set forth below; (2) notify in writing the Interconnection Customer of the results; and (3) include with the notification copies of the analysis and data underlying the Transmission Provider's determinations under the screens. Unless the Interconnection Customer provided instructions for how to respond to the failure of any of the supplemental review screens below at the time the Interconnection Customer accepted the offer of supplemental review, the Transmission Provider shall notify the Interconnection Customer following the failure of any of the screens, or if it is unable to perform the screen in section 2.4.4.1, within two Business Days of making such determination to obtain the Interconnection Customer's permission to: (1) continue evaluating the proposed interconnection under this section 2.4.4; (2) terminate the supplemental review and continue evaluating the Small Generating Facility under section 3; or (3) terminate the supplemental review upon withdrawal of the Interconnection Request by the Interconnection Customer.

2.4.4.1 Minimum Load Screen: Where 12 months of line section minimum load data (including onsite load but not station service load served by the proposed Small Generating Facility) are available, can be calculated, can be estimated from existing data, or determined from a power flow model, the aggregate Generating Facility capacity on the line section is less than 100% of the minimum load for all line sections bounded by automatic sectionalizing devices upstream of the proposed Small Generating Facility. If minimum load data is not available, or cannot be calculated, estimated or determined, the Transmission Provider shall include the reason(s) that it is unable to calculate, estimate or determine minimum load in its supplemental review results notification under section 2.4.4.

2.4.4.1.1 The type of generation used by the proposed Small Generating Facility will be taken into account when calculating, estimating, or determining circuit or line section minimum load relevant for the application of screen 2.4.1.1. Solar photovoltaic (PV) generation systems with no battery storage use daytime minimum load (i.e. 10 a.m. to 4 p.m. for fixed panel systems and 8 a.m. to 6 p.m. for PV systems utilizing tracking systems), while all other generation uses absolute minimum load.

2.4. 4.1.2 When this screen is being applied to a Small Generating Facility that serves some station service load, only the net injection into the Transmission Provider's electric system will be considered as part of the aggregate generation.

2.4. 4.1.3 Transmission Provider will not consider as part of the aggregate generation for purposes of this screen generating facility capacity known to be already reflected in the minimum load data.

2.4.4.2 Voltage and Power Quality Screen: In aggregate with existing generation on the line section: (1) the voltage regulation on the line section can be maintained in

compliance with relevant requirements under all system conditions; (2) the voltage fluctuation is within acceptable limits as defined by Institute of Electrical and Electronics Engineers (IEEE) Standard 1453, or utility practice similar to IEEE Standard 1453; and (3) the harmonic levels meet IEEE Standard 519 limits.

2.4.4.3 Safety and Reliability Screen: The location of the proposed Small Generating Facility and the aggregate generation capacity on the line section do not create impacts to safety or reliability that cannot be adequately addressed without application of the Study Process. The Transmission Provider shall give due consideration to the following and other factors in determining potential impacts to safety and reliability in applying this screen.

2.4.4.3.1 Whether the line section has significant minimum loading levels dominated by a small number of customers (e.g., several large commercial customers).

2.4.4.3.2 Whether the loading along the line section is uniform or even.

2.4.4.3.3 Whether the proposed Small Generating Facility is located in close proximity to the substation (i.e., less than 2.5 electrical circuit miles), and whether the line section from the substation to the Point of Interconnection is a Mainline rated for normal and emergency ampacity.

2.4.4.3.4 Whether the proposed Small Generating Facility incorporates a time delay function to prevent reconnection of the generator to the system until system voltage and frequency are within normal limits for a prescribed time.

2.4.4.3.5 Whether operational flexibility is reduced by the proposed Small Generating Facility, such that transfer of the line section(s) of the Small Generating Facility to a neighboring distribution circuit/substation may trigger overloads or voltage issues.

2.4.4.3.6 Whether the proposed Small Generating Facility employs equipment or systems certified by a recognized standards organization to address technical issues such as, but not limited to, islanding, reverse power flow, or voltage quality.

2.4.5 If the proposed interconnection passes the supplemental screens in sections 2.4.4.1, 2.4.4.2, and 2.4.4.3 above, the Interconnection Request shall be approved and the Transmission Provider will provide the Interconnection Customer with an executable interconnection agreement within the timeframes established in sections 2.4.5.1 and 2.4.5.2 below. If the proposed interconnection fails any of the supplemental review screens and the Interconnection Customer does not withdraw its Interconnection Request, it shall continue to be evaluated under the section 3 Study Process consistent with section 2.4.5.3 below.

2.4.5.1 If the proposed interconnection passes the supplemental screens in sections 2.4.1.1, 2.4.1.2, and 2.4.1.3 above and does not require construction of facilities by the Transmission Provider on its own system, the interconnection agreement shall be provided within ten Business Days after the notification of the supplemental review results.

2.4.5.2 If interconnection facilities or minor modifications to the Transmission Provider's system are required for the proposed interconnection to pass the supplemental screens in sections 2.4.1.1, 2.4.1.2, and 2.4.1.3 above, and the Interconnection Customer agrees to pay for the modifications to the Transmission Provider's electric system, the interconnection agreement, along with a non-binding good faith estimate for the interconnection facilities and/or minor modifications, shall be provided to the Interconnection Customer within 15 Business Days after receiving written notification of the supplemental review results.

2.4.5.3 If the proposed interconnection would require more than interconnection facilities or minor modifications to the Transmission Provider's system to pass the supplemental screens in sections 2.4.1.1, 2.4.1.2, and 2.4.1.3 above, the Transmission Provider shall notify the Interconnection Customer, at the same time it notifies the Interconnection Customer with the supplemental review results, that the Interconnection Request shall be evaluated under the section 3 Study Process unless the Interconnection Customer withdraws its Small Generating Facility.

Section 3. Study Process

3.1 Applicability

The Study Process shall be used by an Interconnection Customer proposing to interconnect its Small Generating Facility with the Transmission Provider's Transmission System or Distribution System if the Small Generating Facility (1) is larger than 2 MW but no larger than 20 MW, (2) is not certified, or (3) is certified but did not pass the Fast Track Process or the 10 kW Inverter Process.

3.2 Scoping Meeting

3.2.1 A scoping meeting will be held within ten Business Days after the Interconnection Request is deemed complete, or as otherwise mutually agreed to by the Parties. The Transmission Provider and the Interconnection Customer will bring to the meeting personnel, including system engineers and other resources as may be reasonably required to accomplish the purpose of the meeting.

3.2.2 The purpose of the scoping meeting is to discuss the Interconnection Request and review existing studies relevant to the Interconnection Request. The Parties shall further discuss whether the Transmission Provider should perform a feasibility study or proceed directly to a system impact study, or a facilities study, or an interconnection agreement. If the Parties agree that a feasibility study should be performed, the Transmission Provider shall provide the Interconnection Customer, as soon as possible, but not later than five Business Days after the scoping meeting, a feasibility study agreement (Attachment 6) including an outline of the scope of the study and a non-binding good faith estimate of the cost to perform the study.

3.2.3 The scoping meeting may be omitted by mutual agreement. In order to remain in consideration for interconnection, an Interconnection Customer who has requested a feasibility study must return the executed feasibility study agreement within 15 Business Days. If the Parties agree not to perform a feasibility study, the Transmission Provider shall provide the Interconnection Customer, no later than five Business Days after the scoping meeting, a system impact study agreement (Attachment 7) including an outline of the scope of the study and a non-binding good faith estimate of the cost to perform the study.

3.3 Feasibility Study

3.3.1 The feasibility study shall identify any potential adverse system impacts that would result from the interconnection of the Small Generating Facility.

3.3.2 A deposit of the lesser of 50 percent of the good faith estimated feasibility study costs or earnest money of $1,000 may be required from the Interconnection Customer.

3.3.3 The scope of and cost responsibilities for the feasibility study are described in the attached feasibility study agreement (Attachment 6).

3.3.4 If the feasibility study shows no potential for adverse system impacts, the Transmission Provider shall send the Interconnection Customer a facilities study agreement, including an outline of the scope of the study and a non-binding good faith estimate of the cost to perform the study. If no additional facilities are required, the Transmission Provider shall send the Interconnection Customer an executable interconnection agreement within five Business Days.

3.3.5 If the feasibility study shows the potential for adverse system impacts, the review process shall proceed to the appropriate system impact study(s).

3.4 System Impact Study

3.4.1 A system impact study shall identify and detail the electric system impacts that would result if the proposed Small Generating Facility were interconnected without project modifications or electric system modifications, focusing on the adverse system impacts identified in the feasibility study, or to study potential

impacts, including but not limited to those identified in the scoping meeting. A system impact study shall evaluate the impact of the proposed interconnection on the reliability of the electric system.

3.4.2 If no transmission system impact study is required, but potential electric power Distribution System adverse system impacts are identified in the scoping meeting or shown in the feasibility study, a distribution system impact study must be performed. The Transmission Provider shall send the Interconnection Customer a distribution system impact study agreement within 15 Business Days of transmittal of the feasibility study report, including an outline of the scope of the study and a non-binding good faith estimate of the cost to perform the study, or following the scoping meeting if no feasibility study is to be performed.

3.4.3 In instances where the feasibility study or the distribution system impact study shows potential for transmission system adverse system impacts, within five Business Days following transmittal of the feasibility study report, the Transmission Provider shall send the Interconnection Customer a transmission system impact study agreement, including an outline of the scope of the study and a non-binding good faith estimate of the cost to perform the study, if such a study is required.

3.4.4 If a transmission system impact study is not required, but electric power Distribution System adverse system impacts are shown by the feasibility study to be possible and no distribution system impact study has been conducted, the Transmission Provider shall send the Interconnection Customer a distribution system impact study agreement.

3.4.5 If the feasibility study shows no potential for transmission system or Distribution System adverse system impacts, the Transmission Provider shall send the Interconnection Customer either a facilities study agreement (Attachment 8), including an outline of the scope of the study and a non-binding good faith estimate of the cost to perform the study, or an executable interconnection agreement, as applicable.

3.4.6 In order to remain under consideration for interconnection, the Interconnection Customer must return executed system impact study agreements, if applicable, within 30 Business Days.

3.4.7 A deposit of the good faith estimated costs for each system impact study may be required from the Interconnection Customer.

3.4.8 The scope of and cost responsibilities for a system impact study are described in the attached system impact study agreement.

3.4.9 Where transmission systems and Distribution Systems have separate owners, such as is the case with transmission-dependent utilities ("TDUs") - whether investor-owned or not - the Interconnection Customer may apply to the nearest Transmission Provider (Transmission Owner, Regional Transmission Operator, or

Independent Transmission Provider) providing transmission service to the TDU to request project coordination. Affected Systems shall participate in the study and provide all information necessary to prepare the study.

3.5 Facilities Study

3.5.1 Once the required system impact study(s) is completed, a system impact study report shall be prepared and transmitted to the Interconnection Customer along with a facilities study agreement within five Business Days, including an outline of the scope of the study and a non-binding good faith estimate of the cost to perform the facilities study. In the case where one or both impact studies are determined to be unnecessary, a notice of the fact shall be transmitted to the Interconnection Customer within the same timeframe.

3.5.2 In order to remain under consideration for interconnection, or, as appropriate, in the Transmission Provider's interconnection queue, the Interconnection Customer must return the executed facilities study agreement or a request for an extension of time within 30 Business Days.

3.5.3 The facilities study shall specify and estimate the cost of the equipment, engineering, procurement and construction work (including overheads) needed to implement the conclusions of the system impact study(s).

3.5.4 Design for any required Interconnection Facilities and/or Upgrades shall be performed under the facilities study agreement. The Transmission Provider may contract with consultants to perform activities required under the facilities study agreement. The Interconnection Customer and the Transmission Provider may agree to allow the Interconnection Customer to separately arrange for the design of some of the Interconnection Facilities. In such cases, facilities design will be reviewed and/or modified prior to acceptance by the Transmission Provider, under the provisions of the facilities study agreement. If the Parties agree to separately arrange for design and construction, and provided security and confidentiality requirements can be met, the Transmission Provider shall make sufficient information available to the Interconnection Customer in accordance with confidentiality and critical infrastructure requirements to permit the Interconnection Customer to obtain an independent design and cost estimate for any necessary facilities.

3.5.5 A deposit of the good faith estimated costs for the facilities study may be required from the Interconnection Customer.

3.5.6 The scope of and cost responsibilities for the facilities study are described in the attached facilities study agreement.

3.5.7 Upon completion of the facilities study, and with the agreement of the Interconnection Customer to pay for Interconnection Facilities and Upgrades identified in the facilities study, the Transmission Provider shall provide the

Interconnection Customer an executable interconnection agreement within five Business Days.

Section 4. Provisions that Apply to All Interconnection Requests

4.1 Reasonable Efforts

The Transmission Provider shall make reasonable efforts to meet all time frames provided in these procedures unless the Transmission Provider and the Interconnection Customer agree to a different schedule. If the Transmission Provider cannot meet a deadline provided herein, it shall notify the Interconnection Customer, explain the reason for the failure to meet the deadline, and provide an estimated time by which it will complete the applicable interconnection procedure in the process.

4.2 Disputes

4.2.1 The Parties agree to attempt to resolve all disputes arising out of the interconnection process according to the provisions of this article.

4.2.2 In the event of a dispute, either Party shall provide the other Party with a written Notice of Dispute. Such Notice shall describe in detail the nature of the dispute.

4.2.3 If the dispute has not been resolved within two Business Days after receipt of the Notice, either Party may contact FERC's Dispute Resolution Service (DRS) for assistance in resolving the dispute.

4.2.4 The DRS will assist the Parties in either resolving their dispute or in selecting an appropriate dispute resolution venue (e.g., mediation, settlement judge, early neutral evaluation, or technical expert) to assist the Parties in resolving their dispute. DRS can be reached at 1-877-337-2237 or via the internet at http://www.ferc.gov/legal/adr.asp.

4.2.5 Each Party agrees to conduct all negotiations in good faith and will be responsible for one-half of any costs paid to neutral third-parties.

4.2.6 If neither Party elects to seek assistance from the DRS, or if the attempted dispute resolution fails, then either Party may exercise whatever rights and remedies it may have in equity or law consistent with the terms of these procedures.

4.3 Interconnection Metering

Any metering necessitated by the use of the Small Generating Facility shall be installed at the Interconnection Customer's expense in accordance with Federal Energy Regulatory Commission, state, or local regulatory requirements or the Transmission Provider's specifications.

4.4 Commissioning

Commissioning tests of the Interconnection Customer's installed equipment shall be performed pursuant to applicable codes and standards. The Transmission Provider must be given at least five Business Days written notice, or as otherwise mutually agreed to by the Parties, of the tests and may be present to witness the commissioning tests.

4.5. Confidentiality

4.5.1 Confidential information shall mean any confidential and/or proprietary information provided by one Party to the other Party that is clearly marked or otherwise designated "Confidential." For purposes of these procedures all design, operating specifications, and metering data provided by the Interconnection Customer shall be deemed confidential information regardless of whether it is clearly marked or otherwise designated as such.

4.5.2 Confidential Information does not include information previously in the public domain, required to be publicly submitted or divulged by Governmental Authorities (after notice to the other Party and after exhausting any opportunity to oppose such publication or release), or necessary to be divulged in an action to enforce these procedures. Each Party receiving Confidential Information shall hold such information in confidence and shall not disclose it to any third party nor to the public without the prior written authorization from the Party providing that information, except to fulfill obligations under these procedures, or to fulfill legal or regulatory requirements.

4.5.2.1 Each Party shall employ at least the same standard of care to protect Confidential Information obtained from the other Party as it employs to protect its own Confidential Information.

4.5.2.2 Each Party is entitled to equitable relief, by injunction or otherwise, to enforce its rights under this provision to prevent the release of Confidential Information without bond or proof of damages, and may seek other remedies available at law or in equity for breach of this provision.

4.5.3 Notwithstanding anything in this article to the contrary, and pursuant to 18 C.F.R. § 1b.20, if FERC, during the course of an investigation or otherwise, requests information from one of the Parties that is otherwise required to be maintained in confidence pursuant to these procedures, the Party shall provide the requested information to FERC, within the time provided for in the request for information. In providing the information to FERC, the Party may, consistent with 18 C.F.R. § 388.112, request that the information be treated as confidential and non-public by FERC and that the information be withheld from public disclosure. Parties are prohibited from notifying the other Party prior to the release of the Confidential Information to FERC. The Party shall notify the other Party when it is notified by FERC that a request to release Confidential Information has been received by FERC, at which time either of the Parties may respond before such information would be made public, pursuant to 18 C.F.R. § 388.112. Requests from a state

regulatory body conducting a confidential investigation shall be treated in a similar manner if consistent with the applicable state rules and regulations.

4.6 Comparability

The Transmission Provider shall receive, process and analyze all Interconnection Requests in a timely manner as set forth in this document. The Transmission Provider shall use the same reasonable efforts in processing and analyzing Interconnection Requests from all Interconnection Customers, whether the Small Generating Facility is owned or operated by the Transmission Provider, its subsidiaries or affiliates, or others.

4.7 Record Retention

The Transmission Provider shall maintain for three years records, subject to audit, of all Interconnection Requests received under these procedures, the times required to complete Interconnection Request approvals and disapprovals, and justification for the actions taken on the Interconnection Requests.

4.8 Interconnection Agreement

After receiving an interconnection agreement from the Transmission Provider, the Interconnection Customer shall have 30 Business Days or another mutually agreeable timeframe to sign and return the interconnection agreement, or request that the Transmission Provider file an unexecuted interconnection agreement with the Federal Energy Regulatory Commission. If the Interconnection Customer does not sign the interconnection agreement, or ask that it be filed unexecuted by the Transmission Provider within 30 Business Days, the Interconnection Request shall be deemed withdrawn. After the interconnection agreement is signed by the Parties, the interconnection of the Small Generating Facility shall proceed under the provisions of the interconnection agreement.

4.9 Coordination with Affected Systems

The Transmission Provider shall coordinate the conduct of any studies required to determine the impact of the Interconnection Request on Affected Systems with Affected System operators and, if possible, include those results (if available) in its applicable interconnection study within the time frame specified in these procedures. The Transmission Provider will include such Affected System operators in all meetings held with the Interconnection Customer as required by these procedures. The Interconnection Customer will cooperate with the Transmission Provider in all matters related to the conduct of studies and the determination of modifications to Affected Systems. A Transmission Provider which may be an Affected System shall cooperate with the Transmission Provider with whom interconnection has been requested in all matters related to the conduct of studies and the determination of modifications to Affected Systems.

4.10 Capacity of the Small Generating Facility

4.10.1 If the Interconnection Request is for an increase in capacity for an existing Small Generating Facility, the Interconnection Request shall be evaluated on the basis of the new total capacity of the Small Generating Facility.

4.10.2 If the Interconnection Request is for a Small Generating Facility that includes multiple energy production devices at a site for which the Interconnection Customer seeks a single Point of Interconnection, the Interconnection Request shall be evaluated on the basis of the aggregate capacity of the multiple devices.

4.10.3 The Interconnection Request shall be evaluated using the maximum capacity that the Small Generating Facility is capable of injecting into the Transmission Provider's electric system. However, if the maximum capacity that the Small Generating Facility is capable of injecting into the Transmission Provider's electric system is limited (e.g., through use of a control system, power relay(s), or other similar device settings or adjustments), then the Interconnection Customer must obtain the Transmission Provider's agreement, with such agreement not to be unreasonably withheld, that the manner in which the Interconnection Customer proposes to implement such a limit will not adversely affect the safety and reliability of the Transmission Provider's system. If the Transmission Provider does not so agree, then the Interconnection Request must be withdrawn or revised to specify the maximum capacity that the Small Generating Facility is capable of injecting into the Transmission Provider's electric system without such limitations. Furthermore, nothing in this section shall prevent a Transmission Provider from considering an output higher than the limited output, if appropriate, when evaluating system protection impacts.

Attachment 1

Glossary of Terms

10 kW Inverter Process - The procedure for evaluating an Interconnection Request for a certified inverter-based Small Generating Facility no larger than 10 kW that uses the section 2 screens. The application process uses an all-in-one document that includes a simplified Interconnection Request, simplified procedures, and a brief set of terms and conditions. See SGIP Attachment 5.

Affected System - An electric system other than the Transmission Provider's Transmission System that may be affected by the proposed interconnection.

Business Day - Monday through Friday, excluding Federal Holidays.

Distribution System - The Transmission Provider's facilities and equipment used to transmit electricity to ultimate usage points such as homes and industries directly from nearby generators or from interchanges with higher voltage transmission networks which transport bulk power over longer distances. The voltage levels at which Distribution Systems operate differ among areas.

Distribution Upgrades - The additions, modifications, and upgrades to the Transmission Provider's Distribution System at or beyond the Point of Interconnection to facilitate interconnection of the Small Generating Facility and render the transmission service necessary to effect the Interconnection Customer's wholesale sale of electricity in interstate commerce. Distribution Upgrades do not include Interconnection Facilities.

Fast Track Process - The procedure for evaluating an Interconnection Request for a certified Small Generating Facility that meets the eligibility requirements of section 2.1 and includes the section 2 screens, customer options meeting, and optional supplemental review.

Good Utility Practice - Any of the practices, methods and acts engaged in or approved by a significant portion of the electric industry during the relevant time period, or any of the practices, methods and acts which, in the exercise of reasonable judgment in light of the facts known at the time the decision was made, could have been expected to accomplish the desired result at a reasonable cost consistent with good business practices, reliability, safety and expedition. Good Utility Practice is not intended to be limited to the optimum practice, method, or act to the exclusion of all others, but rather to be acceptable practices, methods, or acts generally accepted in the region.

Interconnection Customer - Any entity, including the Transmission Provider, the Transmission Owner or any of the affiliates or subsidiaries of either, that proposes to interconnect its Small Generating Facility with the Transmission Provider's Transmission System.

Interconnection Facilities - The Transmission Provider's Interconnection Facilities and the Interconnection Customer's Interconnection Facilities. Collectively, Interconnection Facilities include all facilities and equipment between the Small Generating Facility and the Point of Interconnection, including any modification, additions or upgrades that are necessary to physically and electrically interconnect the Small Generating Facility to the Transmission

Provider's Transmission System. Interconnection Facilities are sole use facilities and shall not include Distribution Upgrades or Network Upgrades.

Interconnection Request - The Interconnection Customer's request, in accordance with the Tariff, to interconnect a new Small Generating Facility, or to increase the capacity of, or make a Material Modification to the operating characteristics of, an existing Small Generating Facility that is interconnected with the Transmission Provider's Transmission System.

Material Modification - A modification that has a material impact on the cost or timing of any Interconnection Request with a later queue priority date.

Network Resource – Any designated generating resource owned, purchased, or leased by a Network Customer under the Network Integration Transmission Service Tariff. Network Resources do not include any resource, or any portion thereof, that is committed for sale to third parties or otherwise cannot be called upon to meet the Network Customer's Network Load on a non-interruptible basis.

Network Resource Interconnection Service – An Interconnection Service that allows the Interconnection Customer to integrate its Generating Facility with the Transmission Provider's System (1) in a manner comparable to that in which the Transmission Provider integrates its generating facilities to serve native load customers; or (2) in an RTO or ISO with market based congestion management, in the same manner as Network Resources. Network Resource Interconnection Service in and of itself does not convey transmission service.

Network Upgrades - Additions, modifications, and upgrades to the Transmission Provider's Transmission System required at or beyond the point at which the Small Generating Facility interconnects with the Transmission Provider's Transmission System to accommodate the interconnection with the Small Generating Facility to the Transmission Provider's Transmission System. Network Upgrades do not include Distribution Upgrades.

Party or Parties - The Transmission Provider, Transmission Owner, Interconnection Customer or any combination of the above.

Point of Interconnection - The point where the Interconnection Facilities connect with the Transmission Provider's Transmission System.

Queue Position - The order of a valid Interconnection Request, relative to all other pending valid Interconnection Requests, that is established based upon the date and time of receipt of the valid Interconnection Request by the Transmission Provider.

Small Generating Facility - The Interconnection Customer's device for the production and/or storage for later injection of electricity identified in the Interconnection Request, but shall not include the Interconnection Customer's Interconnection Facilities.

Study Process - The procedure for evaluating an Interconnection Request that includes the section 3 scoping meeting, feasibility study, system impact study, and facilities study.

Transmission Owner - The entity that owns, leases or otherwise possesses an interest in the portion of the Transmission System at the Point of Interconnection and may be a Party to the Small Generator Interconnection Agreement to the extent necessary.

Transmission Provider - The public utility (or its designated agent) that owns, controls, or operates transmission or distribution facilities used for the transmission of electricity in interstate commerce and provides transmission service under the Tariff. The term Transmission Provider should be read to include the Transmission Owner when the Transmission Owner is separate from the Transmission Provider.

Transmission System - The facilities owned, controlled or operated by the Transmission Provider or the Transmission Owner that are used to provide transmission service under the Tariff.

Upgrades - The required additions and modifications to the Transmission Provider's Transmission System at or beyond the Point of Interconnection. Upgrades may be Network Upgrades or Distribution Upgrades. Upgrades do not include Interconnection Facilities.

Attachment 2

SMALL GENERATOR INTERCONNECTION REQUEST
(Application Form)

Transmission Provider: _____

Designated Contact Person: _____

Address: _____

Telephone Number: _____

Fax: _____

E-Mail Address: _____

An Interconnection Request is considered complete when it provides all applicable and correct information required below. Per SGIP section 1.5, documentation of site control must be submitted with the Interconnection Request.

Preamble and Instructions

An Interconnection Customer who requests a Federal Energy Regulatory Commission jurisdictional interconnection must submit this Interconnection Request by hand delivery, mail, e-mail, or fax to the Transmission Provider.

Processing Fee or Deposit:

If the Interconnection Request is submitted under the Fast Track Process, the non-refundable processing fee is $500.

If the Interconnection Request is submitted under the Study Process, whether a new submission or an Interconnection Request that did not pass the Fast Track Process, the Interconnection Customer shall submit to the Transmission Provider a deposit not to exceed $1,000 towards the cost of the feasibility study.

Interconnection Customer Information

Legal Name of the Interconnection Customer (or, if an individual, individual's name)

Name: _____

Contact Person: _____

Mailing Address: _____

City: _____ State: _____ Zip: _____

Facility Location (if different from above):_____

Telephone (Day): _____ Telephone (Evening): _____

Fax: _____ E-Mail Address: _____

Alternative Contact Information (if different from the Interconnection Customer)

Contact Name:

Title: _____

Address: _____

_____

Telephone (Day): _____ Telephone (Evening): _____

Fax: _____ E-Mail Address: _____

Application is for: _____New Small Generating Facility
_____Capacity addition to Existing Small Generating Facility

If capacity addition to existing facility, please describe: _____
_____

Will the Small Generating Facility be used for any of the following?

Net Metering? Yes ___ No ___
To Supply Power to the Interconnection Customer? Yes ___No ___
To Supply Power to Others? Yes ____ No ____

For installations at locations with existing electric service to which the proposed Small Generating Facility will interconnect, provide:

_____ _____
(Local Electric Service Provider*) (Existing Account Number*)

[*To be provided by the Interconnection Customer if the local electric service provider is different from the Transmission Provider]

Contact Name: _____

Title: _____

Address: _____

_____

Telephone (Day): _____Telephone (Evening): _____

Fax: _____ E-Mail Address: _____

Requested Point of Interconnection: _____

Interconnection Customer's Requested In-Service Date: _____

Small Generating Facility Information
Data apply only to the Small Generating Facility, not the Interconnection Facilities.

Energy Source: ___ Solar ___ Wind ___ Hydro ___ Hydro Type (e.g., Run-of-River):_____
Diesel ___ Natural Gas ___ Fuel Oil ___ Other (state type) _____

Prime Mover: ___Fuel Cell ___Recip Engine ___Gas Turb ___Steam Turb
___Microturbine ___PV ___Other

Type of Generator: ____Synchronous ____Induction ____ Inverter

Generator Nameplate Rating: _____kW (Typical) Generator Nameplate kVAR: _____

Interconnection Customer or Customer-Site Load: _____kW (if none, so state)

Typical Reactive Load (if known): _____

Maximum Physical Export Capability Requested: _____ kW

List components of the Small Generating Facility equipment package that are currently certified:

Equipment Type	Certifying Entity
1. _____	_____
2. _____	_____
3. _____	_____
4. _____	_____
5. _____	_____

Is the prime mover compatible with the certified protective relay package? __Yes __No

Generator (or solar collector)
Manufacturer, Model Name & Number:_____
Version Number: _____

Nameplate Output Power Rating in kW: (Summer) _____ (Winter) _____
Nameplate Output Power Rating in kVA: (Summer) _____ (Winter) _____

Individual Generator Power Factor
Rated Power Factor: Leading: _____Lagging: _____

Total Number of Generators in wind farm to be interconnected pursuant to this

Interconnection Request: _____ Elevation: _____ ___Single phase ___Three phase

Inverter Manufacturer, Model Name & Number (if used): _____

List of adjustable set points for the protective equipment or software: _____

Primary frequency response operating range for electric storage resources:

Minimum State of Charge:_____

Maximum State of Charge:_____

Note: A completed Power Systems Load Flow data sheet must be supplied with the Interconnection Request.

Small Generating Facility Characteristic Data (for inverter-based machines)

Max design fault contribution current: _____ Instantaneous ___ or RMS? ___

Harmonics Characteristics: _____

Start-up requirements: _____

Small Generating Facility Characteristic Data (for rotating machines)

RPM Frequency: _____
(*) Neutral Grounding Resistor (If Applicable): _____

Synchronous Generators:

Direct Axis Synchronous Reactance, Xd: _____ P.U.
Direct Axis Transient Reactance, X'_d: _____P.U.
Direct Axis Subtransient Reactance, X''_d: _____P.U.
Negative Sequence Reactance, X_2: _____ P.U.
Zero Sequence Reactance, X_0: _____ P.U.
KVA Base: _____
Field Volts: _____
Field Amperes: _____

Induction Generators:

Motoring Power (kW): _____
I_2^2t or K (Heating Time Constant): _____
Rotor Resistance, Rr: _____
Stator Resistance, Rs: _____
Stator Reactance, Xs: _____

Rotor Reactance, Xr: _____
Magnetizing Reactance, Xm: _____
Short Circuit Reactance, Xd": _____
Exciting Current: _____
Temperature Rise: _____
Frame Size: _____
Design Letter: _____
Reactive Power Required In Vars (No Load): _____
Reactive Power Required In Vars (Full Load): _____
Total Rotating Inertia, H: _____ Per Unit on kVA Base

Note: Please contact the Transmission Provider prior to submitting the Interconnection Request to determine if the specified information above is required.

Excitation and Governor System Data for Synchronous Generators Only

Provide appropriate IEEE model block diagram of excitation system, governor system and power system stabilizer (PSS) in accordance with the regional reliability council criteria. A PSS may be determined to be required by applicable studies. A copy of the manufacturer's block diagram may not be substituted.

Interconnection Facilities Information

Will a transformer be used between the generator and the point of common coupling? __Yes __No

Will the transformer be provided by the Interconnection Customer? __Yes __No

Transformer Data (If Applicable, for Interconnection Customer-Owned Transformer):

Is the transformer: ____single phase _____three phase? Size: _____kVA
Transformer Impedance: _____% on _____kVA Base

If Three Phase:
Transformer Primary: _____ Volts _____ Delta _____Wye _____ Wye Grounded
Transformer Secondary: _____ Volts _____ Delta _____Wye _____ Wye Grounded
Transformer Tertiary: _____ Volts _____ Delta _____Wye _____ Wye Grounded

Transformer Fuse Data (If Applicable, for Interconnection Customer-Owned Fuse):

(Attach copy of fuse manufacturer's Minimum Melt and Total Clearing Time-Current Curves)

Manufacturer: _____ Type: _____ Size: _____ Speed: _____

Interconnecting Circuit Breaker (if applicable):

Manufacturer: _____ Type: _____

Load Rating (Amps): _____ Interrupting Rating (Amps): _____ Trip Speed (Cycles): _____

Interconnection Protective Relays (If Applicable):

If Microprocessor-Controlled:

List of Functions and Adjustable Setpoints for the protective equipment or software:

Setpoint Function	Minimum	Maximum
1.		
2.		
3.		
4.		
5.		
6.		

If Discrete Components:

(Enclose Copy of any Proposed Time-Overcurrent Coordination Curves)

Manufacturer: _____ Type: _____ Style/Catalog No.: _____ Proposed Setting: _____
Manufacturer: _____ Type: _____ Style/Catalog No.: _____ Proposed Setting: _____
Manufacturer: _____ Type: _____ Style/Catalog No.: _____ Proposed Setting: _____
Manufacturer: _____ Type: _____ Style/Catalog No.: _____ Proposed Setting: _____
Manufacturer: _____ Type: _____ Style/Catalog No.: _____ Proposed Setting: _____

Current Transformer Data (If Applicable):

(Enclose Copy of Manufacturer's Excitation and Ratio Correction Curves)

Manufacturer: _____
Type: _____ Accuracy Class: ___ Proposed Ratio Connection: ____

Manufacturer: _____
Type: _____ Accuracy Class: ___ Proposed Ratio Connection: ____

Potential Transformer Data (If Applicable):

Manufacturer: _____
Type: _____ Accuracy Class: ___ Proposed Ratio Connection: ____

Manufacturer: _____
Type: _____ Accuracy Class: ___ Proposed Ratio Connection: ____

General Information

Enclose copy of site electrical one-line diagram showing the configuration of all Small Generating Facility equipment, current and potential circuits, and protection and control schemes. This one-line diagram must be signed and stamped by a licensed Professional Engineer if the Small Generating Facility is larger than 50 kW. Is One-Line Diagram Enclosed? ____Yes ____No

Enclose copy of any site documentation that indicates the precise physical location of the proposed Small Generating Facility (e.g., USGS topographic map or other diagram or documentation).

Proposed location of protective interface equipment on property (include address if different from the Interconnection Customer's address) _____

Enclose copy of any site documentation that describes and details the operation of the protection and control schemes. Is Available Documentation Enclosed? ___Yes ____No

Enclose copies of schematic drawings for all protection and control circuits, relay current circuits, relay potential circuits, and alarm/monitoring circuits (if applicable).
Are Schematic Drawings Enclosed? ___Yes ____No

Applicant Signature

I hereby certify that, to the best of my knowledge, all the information provided in this Interconnection Request is true and correct.

For Interconnection Customer: _____ Date: _____

Attachment 3

Certification Codes and Standards

IEEE1547 Standard for Interconnecting Distributed Resources with Electric Power Systems (including use of IEEE 1547.1 testing protocols to establish conformity)

UL 1741 Inverters, Converters, and Controllers for Use in Independent Power Systems

IEEE Std 929-2000 IEEE Recommended Practice for Utility Interface of Photovoltaic (PV) Systems

NFPA 70 (2002), National Electrical Code

IEEE Std C37.90.1-1989 (R1994), IEEE Standard Surge Withstand Capability (SWC) Tests for Protective Relays and Relay Systems

IEEE Std C37.90.2 (1995), IEEE Standard Withstand Capability of Relay Systems to Radiated Electromagnetic Interference from Transceivers

IEEE Std C37.108-1989 (R2002), IEEE Guide for the Protection of Network Transformers

IEEE Std C57.12.44-2000, IEEE Standard Requirements for Secondary Network Protectors

IEEE Std C62.41.2-2002, IEEE Recommended Practice on Characterization of Surges in Low Voltage (1000V and Less) AC Power Circuits

IEEE Std C62.45-1992 (R2002), IEEE Recommended Practice on Surge Testing for Equipment Connected to Low-Voltage (1000V and Less) AC Power Circuits

ANSI C84.1-1995 Electric Power Systems and Equipment - Voltage Ratings (60 Hertz)

IEEE Std 100-2000, IEEE Standard Dictionary of Electrical and Electronic Terms
NEMA MG 1-1998, Motors and Small Resources, Revision 3

IEEE Std 519-1992, IEEE Recommended Practices and Requirements for Harmonic Control in Electrical Power Systems

NEMA MG 1-2003 (Rev 2004), Motors and Generators, Revision 1

Attachment 4

Certification of Small Generator Equipment Packages

1.0 Small Generating Facility equipment proposed for use separately or packaged with other equipment in an interconnection system shall be considered certified for interconnected operation if (1) it has been tested in accordance with industry standards for continuous utility interactive operation in compliance with the appropriate codes and standards referenced below by any Nationally Recognized Testing Laboratory (NRTL) recognized by the United States Occupational Safety and Health Administration to test and certify interconnection equipment pursuant to the relevant codes and standards listed in SGIP Attachment 3, (2) it has been labeled and is publicly listed by such NRTL at the time of the interconnection application, and (3) such NRTL makes readily available for verification all test standards and procedures it utilized in performing such equipment certification, and, with consumer approval, the test data itself. The NRTL may make such information available on its website and by encouraging such information to be included in the manufacturer's literature accompanying the equipment.

2.0 The Interconnection Customer must verify that the intended use of the equipment falls within the use or uses for which the equipment was tested, labeled, and listed by the NRTL.

3.0 Certified equipment shall not require further type-test review, testing, or additional equipment to meet the requirements of this interconnection procedure; however, nothing herein shall preclude the need for an on-site commissioning test by the parties to the interconnection nor follow-up production testing by the NRTL.

4.0 If the certified equipment package includes only interface components (switchgear, inverters, or other interface devices), then an Interconnection Customer must show that the generator or other electric source being utilized with the equipment package is compatible with the equipment package and is consistent with the testing and listing specified for this type of interconnection equipment.

5.0 Provided the generator or electric source, when combined with the equipment package, is within the range of capabilities for which it was tested by the NRTL, and does not violate the interface components' labeling and listing performed by the NRTL, no further design review, testing or additional equipment on the customer side of the point of common coupling shall be required to meet the requirements of this interconnection procedure.

6.0 An equipment package does not include equipment provided by the utility.

7.0 Any equipment package approved and listed in a state by that state's regulatory body for interconnected operation in that state prior to the effective date of these small generator interconnection procedures shall be considered certified under these procedures for use in that state.

Attachment 5

Application, Procedures, and Terms and Conditions for Interconnecting a Certified Inverter-Based Small Generating Facility No Larger than 10 kW ("10 kW Inverter Process")

1.0 The Interconnection Customer ("Customer") completes the Interconnection Request ("Application") and submits it to the Transmission Provider ("Company").

2.0 The Company acknowledges to the Customer receipt of the Application within three Business Days of receipt.

3.0 The Company evaluates the Application for completeness and notifies the Customer within ten Business Days of receipt that the Application is or is not complete and, if not, advises what material is missing.

4.0 The Company verifies that the Small Generating Facility can be interconnected safely and reliably using the screens contained in the Fast Track Process in the Small Generator Interconnection Procedures (SGIP). The Company has 15 Business Days to complete this process. Unless the Company determines and demonstrates that the Small Generating Facility cannot be interconnected safely and reliably, the Company approves the Application and returns it to the Customer. Note to Customer: Please check with the Company before submitting the Application if disconnection equipment is required.

5.0 After installation, the Customer returns the Certificate of Completion to the Company. Prior to parallel operation, the Company may inspect the Small Generating Facility for compliance with standards which may include a witness test, and may schedule appropriate metering replacement, if necessary.

6.0 The Company notifies the Customer in writing that interconnection of the Small Generating Facility is authorized. If the witness test is not satisfactory, the Company has the right to disconnect the Small Generating Facility. The Customer has no right to operate in parallel until a witness test has been performed, or previously waived on the Application. The Company is obligated to complete this witness test within ten Business Days of the receipt of the Certificate of Completion. If the Company does not inspect within ten Business Days or by mutual agreement of the Parties, the witness test is deemed waived.

7.0 Contact Information - The Customer must provide the contact information for the legal applicant (i.e., the Interconnection Customer). If another entity is responsible for interfacing with the Company, that contact information must be provided on the Application.

8.0 Ownership Information - Enter the legal names of the owner(s) of the Small Generating Facility. Include the percentage ownership (if any) by any utility or public utility holding company, or by any entity owned by either.

9.0 UL1741 Listed - This standard ("Inverters, Converters, and Controllers for Use in Independent Power Systems") addresses the electrical interconnection design of various forms of generating equipment. Many manufacturers submit their equipment to a Nationally Recognized Testing Laboratory (NRTL) that verifies compliance with UL1741. This "listing" is then marked on the equipment and supporting documentation.

Application for Interconnecting a Certified Inverter-Based Small Generating Facility No Larger than 10kW

This Application is considered complete when it provides all applicable and correct information required below. Per SGIP section 1.5, documentation of site control must be submitted with the Interconnection Request. Additional information to evaluate the Application may be required.

Processing Fee

A non-refundable processing fee of $100 must accompany this Application.

Interconnection Customer

Name: _____

Contact Person: _____

Address: _____

City: _____ State: _____ Zip: _____

Telephone (Day): _____ (Evening): _____

Fax: _____ E-Mail Address: _____

Contact (if different from Interconnection Customer)

Name: _____

Address: _____

City: _____ State: _____ Zip: _____

Telephone (Day): _____ (Evening): _____

Fax: _____ E-Mail Address: _____

Owner of the facility (include % ownership by any electric utility): _____

Small Generating Facility Information

Location (if different from above): _____

Electric Service Company: _____

Account Number: _____

Inverter Manufacturer:_____Model _____

Nameplate Rating:_____ (kW)_____ (kVA)_____ (AC Volts)

Single Phase _____ Three Phase_____

System Design Capacity: _____ (kW) _____ (kVA)

Prime Mover: Photovoltaic ☐ Reciprocating Engine ☐ Fuel Cell ☐

Turbine ☐ Other _____

Energy Source: Solar ☐ Wind ☐ Hydro ☐ Diesel ☐ Natural Gas ☐

Fuel Oil ☐ Other (describe) _____

Is the equipment UL1741 Listed? Yes__ No ___

If Yes, attach manufacturer's cut-sheet showing UL1741 listing

Estimated Installation Date: _____Estimated In-Service Date: _____

The 10 kW Inverter Process is available only for inverter-based Small Generating Facilities no larger than 10 kW that meet the codes, standards, and certification requirements of Attachments 3 and 4 of the Small Generator Interconnection Procedures (SGIP), or the Transmission Provider has reviewed the design or tested the proposed Small Generating Facility and is satisfied that it is safe to operate.

List components of the Small Generating Facility equipment package that are currently certified:

Equipment Type	Certifying Entity
1. _____	_____
2. _____	_____
3. _____	_____
4. _____	_____
5. _____	_____

Interconnection Customer Signature

I hereby certify that, to the best of my knowledge, the information provided in this Application is true. I agree to abide by the Terms and Conditions for Interconnecting an Inverter-Based Small Generating Facility No Larger than 10kW and return the Certificate of Completion when the Small Generating Facility has been installed.

Signed: _____

Title: _____ Date: _____

Contingent Approval to Interconnect the Small Generating Facility

(For Company use only)

Interconnection of the Small Generating Facility is approved contingent upon the Terms and Conditions for Interconnecting an Inverter-Based Small Generating Facility No Larger than 10kW and return of the Certificate of Completion.

Company Signature: _____

Title: _____ Date: _____

Application ID number: _____

Company waives inspection/witness test? Yes___No___

Small Generating Facility Certificate of Completion

Is the Small Generating Facility owner-installed? Yes_____ No _____

Interconnection Customer: _____

Contact Person:_____

Address: _____

Location of the Small Generating Facility (if different from above):

_____

City: _____ State: _____ Zip Code: _____

Telephone (Day): _____ (Evening): _____

Fax: _____ E-Mail Address: _____

Electrician:

Name: _____

Address: _____

City: _____ State: _____ Zip Code: _____

Telephone (Day): _____ (Evening): _____

Fax: _____ E-Mail Address: _____

License number: _____

Date Approval to Install Facility granted by the Company: _____

Application ID number: _____

Inspection:

The Small Generating Facility has been installed and inspected in compliance with the local building/electrical code of _____

Signed (Local electrical wiring inspector, or attach signed electrical inspection):

_____

Print Name: _____

Date: _____

As a condition of interconnection, you are required to send/fax a copy of this form along with a copy of the signed electrical permit to (insert Company information below):

Name: _____

Company: _____

Address:_____

_____

City, State ZIP: _____

Fax: _____

Approval to Energize the Small Generating Facility (For Company use only)

Energizing the Small Generating Facility is approved contingent upon the Terms and Conditions for Interconnecting an Inverter-Based Small Generating Facility No Larger than 10kW

Company Signature: _____

Title: _____ Date: _____

Terms and Conditions for Interconnecting an Inverter-Based Small Generating Facility No Larger than 10kW

1.0 **Construction of the Facility**

The Interconnection Customer (the "Customer") may proceed to construct (including operational testing not to exceed two hours) the Small Generating Facility when the Transmission Provider (the "Company") approves the Interconnection Request (the "Application") and returns it to the Customer.

2.0 **Interconnection and Operation**

The Customer may operate Small Generating Facility and interconnect with the Company's electric system once all of the following have occurred:

2.1 Upon completing construction, the Customer will cause the Small Generating Facility to be inspected or otherwise certified by the appropriate local electrical wiring inspector with jurisdiction, and

2.2 The Customer returns the Certificate of Completion to the Company, and

2.3 The Company has either:

2.3.1 Completed its inspection of the Small Generating Facility to ensure that all equipment has been appropriately installed and that all electrical connections have been made in accordance with applicable codes. All inspections must be conducted by the Company, at its own expense, within ten Business Days after receipt of the Certificate of Completion and shall take place at a time agreeable to the Parties. The Company shall provide a written statement that the Small Generating Facility has passed inspection or shall notify the Customer of what steps it must take to pass inspection as soon as practicable after the inspection takes place; or

2.3.2 If the Company does not schedule an inspection of the Small Generating Facility within ten business days after receiving the Certificate of Completion, the witness test is deemed waived (unless the Parties agree otherwise); or

2.3.3 The Company waives the right to inspect the Small Generating Facility.

2.4 The Company has the right to disconnect the Small Generating Facility in the event of improper installation or failure to return the Certificate of Completion.

2.5 Revenue quality metering equipment must be installed and tested in accordance with applicable ANSI standards.

3.0 **Safe Operations and Maintenance**

The Customer shall be fully responsible to operate, maintain, and repair the Small Generating Facility as required to ensure that it complies at all times with the interconnection standards to which it has been certified.

4.0 **Access**

The Company shall have access to the disconnect switch (if the disconnect switch is required) and metering equipment of the Small Generating Facility at all times. The Company shall provide reasonable notice to the Customer when possible prior to using its right of access.

5.0 **Disconnection**

The Company may temporarily disconnect the Small Generating Facility upon the following conditions:

5.1 For scheduled outages upon reasonable notice.

5.2 For unscheduled outages or emergency conditions.

5.3 If the Small Generating Facility does not operate in the manner consistent with these Terms and Conditions.

5.4 The Company shall inform the Customer in advance of any scheduled disconnection, or as is reasonable after an unscheduled disconnection.

6.0 **Indemnification**

The Parties shall at all times indemnify, defend, and save the other Party harmless from, any and all damages, losses, claims, including claims and actions relating to injury to or death of any person or damage to property, demand, suits, recoveries, costs and expenses, court costs, attorney fees, and all other obligations by or to third parties, arising out of or resulting from the other Party's action or inactions of its obligations under this agreement on behalf of the indemnifying Party, except in cases of gross negligence or intentional wrongdoing by the indemnified Party.

7. 0 **Insurance**

The Parties agree to follow all applicable insurance requirements imposed by the state in which the Point of Interconnection is located. All insurance policies must be maintained with insurers authorized to do business in that state.

8.0 **Limitation of Liability**

Each party's liability to the other party for any loss, cost, claim, injury, liability, or expense, including reasonable attorney's fees, relating to or arising from any act or omission in its performance of this Agreement, shall be limited to the amount of direct damage actually incurred. In no event shall either party be liable to the other party for any indirect, incidental, special, consequential, or punitive damages of any kind whatsoever, except as allowed under paragraph 6.0.

9.0 **Termination**

The agreement to operate in parallel may be terminated under the following conditions:

9.1 **By the Customer**

By providing written notice to the Company.

9.2 **By the Company**

If the Small Generating Facility fails to operate for any consecutive 12 month period or the Customer fails to remedy a violation of these Terms and Conditions.

9.3 **Permanent Disconnection**

In the event this Agreement is terminated, the Company shall have the right to disconnect its facilities or direct the Customer to disconnect its Small Generating Facility.

9.4 **Survival Rights**

This Agreement shall continue in effect after termination to the extent necessary to allow or require either Party to fulfill rights or obligations that arose under the Agreement.

10.0 **Assignment/Transfer of Ownership of the Facility**

This Agreement shall survive the transfer of ownership of the Small Generating Facility to a new owner when the new owner agrees in writing to comply with the terms of this Agreement and so notifies the Company.

Attachment 6

Feasibility Study Agreement

THIS AGREEMENT is made and entered into this_____day of_____ 20___ by and between_____,
a_____, organized and existing under the laws of the State of _____, ("Interconnection Customer,") and _____, a_____ existing under the laws of the State of_____, ("Transmission Provider"). Interconnection Customer and Transmission Provider each may be referred to as a "Party," or collectively as the "Parties."

RECITALS

WHEREAS, Interconnection Customer is proposing to develop a Small Generating Facility or generating capacity addition to an existing Small Generating Facility consistent with the Interconnection Request completed by Interconnection Customer on _____; and

WHEREAS, Interconnection Customer desires to interconnect the Small Generating Facility with the Transmission Provider's Transmission System; and

WHEREAS, Interconnection Customer has requested the Transmission Provider to perform a feasibility study to assess the feasibility of interconnecting the proposed Small Generating Facility with the Transmission Provider's Transmission System, and of any Affected Systems;

NOW, THEREFORE, in consideration of and subject to the mutual covenants contained herein the Parties agreed as follows:

1.0 When used in this Agreement, with initial capitalization, the terms specified shall have the meanings indicated or the meanings specified in the standard Small Generator Interconnection Procedures.

2.0 The Interconnection Customer elects and the Transmission Provider shall cause to be performed an interconnection feasibility study consistent the standard Small Generator Interconnection Procedures in accordance with the Open Access Transmission Tariff.

3.0 The scope of the feasibility study shall be subject to the assumptions set forth in Attachment A to this Agreement.

4.0 The feasibility study shall be based on the technical information provided by the Interconnection Customer in the Interconnection Request, as may be modified as the result of the scoping meeting. The Transmission Provider reserves the right to request additional technical information from the Interconnection Customer as may reasonably become necessary consistent with Good Utility Practice during the course of the feasibility study and as designated in accordance with the standard Small Generator Interconnection Procedures. If the Interconnection Customer modifies its Interconnection

Request, the time to complete the feasibility study may be extended by agreement of the Parties.

5.0 In performing the study, the Transmission Provider shall rely, to the extent reasonably practicable, on existing studies of recent vintage. The Interconnection Customer shall not be charged for such existing studies; however, the Interconnection Customer shall be responsible for charges associated with any new study or modifications to existing studies that are reasonably necessary to perform the feasibility study.

6.0 The feasibility study report shall provide the following analyses for the purpose of identifying any potential adverse system impacts that would result from the interconnection of the Small Generating Facility as proposed:

6.1 Initial identification of any circuit breaker short circuit capability limits exceeded as a result of the interconnection;

6.2 Initial identification of any thermal overload or voltage limit violations resulting from the interconnection;

6.3 Initial review of grounding requirements and electric system protection; and

6.4 Description and non-binding estimated cost of facilities required to interconnect the proposed Small Generating Facility and to address the identified short circuit and power flow issues.

7.0 The feasibility study shall model the impact of the Small Generating Facility regardless of purpose in order to avoid the further expense and interruption of operation for reexamination of feasibility and impacts if the Interconnection Customer later changes the purpose for which the Small Generating Facility is being installed.

8.0 The study shall include the feasibility of any interconnection at a proposed project site where there could be multiple potential Points of Interconnection, as requested by the Interconnection Customer and at the Interconnection Customer's cost.

9.0 A deposit of the lesser of 50 percent of good faith estimated feasibility study costs or earnest money of $1,000 may be required from the Interconnection Customer.

10.0 Once the feasibility study is completed, a feasibility study report shall be prepared and transmitted to the Interconnection Customer. Barring unusual circumstances, the feasibility study must be completed and the feasibility study report transmitted within 30 Business Days of the Interconnection Customer's agreement to conduct a feasibility study.

11.0 Any study fees shall be based on the Transmission Provider's actual costs and will be invoiced to the Interconnection Customer after the study is completed and delivered and will include a summary of professional time.

12.0 The Interconnection Customer must pay any study costs that exceed the deposit without interest within 30 calendar days on receipt of the invoice or resolution of any dispute. If the deposit exceeds the invoiced fees, the Transmission Provider shall refund such excess within 30 calendar days of the invoice without interest.

13.0 Governing Law, Regulatory Authority, and Rules

The validity, interpretation and enforcement of this Agreement and each of its provisions shall be governed by the laws of the state of _____ (where the Point of Interconnection is located), without regard to its conflicts of law principles. This Agreement is subject to all Applicable Laws and Regulations. Each Party expressly reserves the right to seek changes in, appeal, or otherwise contest any laws, orders, or regulations of a Governmental Authority.

14.0 Amendment

The Parties may amend this Agreement by a written instrument duly executed by both Parties.

15.0 No Third-Party Beneficiaries

This Agreement is not intended to and does not create rights, remedies, or benefits of any character whatsoever in favor of any persons, corporations, associations, or entities other than the Parties, and the obligations herein assumed are solely for the use and benefit of the Parties, their successors in interest and where permitted, their assigns.

16.0 Waiver

16.1 The failure of a Party to this Agreement to insist, on any occasion, upon strict performance of any provision of this Agreement will not be considered a waiver of any obligation, right, or duty of, or imposed upon, such Party.

16.2 Any waiver at any time by either Party of its rights with respect to this Agreement shall not be deemed a continuing waiver or a waiver with respect to any other failure to comply with any other obligation, right, duty of this Agreement. Termination or default of this Agreement for any reason by Interconnection Customer shall not constitute a waiver of the Interconnection Customer's legal rights to obtain an interconnection from the Transmission Provider. Any waiver of this Agreement shall, if requested, be provided in writing.

17.0 Multiple Counterparts

This Agreement may be executed in two or more counterparts, each of which is deemed an original but all constitute one and the same instrument.

18.0 No Partnership

This Agreement shall not be interpreted or construed to create an association, joint venture, agency relationship, or partnership between the Parties or to impose any partnership obligation or partnership liability upon either Party. Neither Party shall have any right, power or authority to enter into any agreement or undertaking for, or act on behalf of, or to act as or be an agent or representative of, or to otherwise bind, the other Party.

19.0 Severability

If any provision or portion of this Agreement shall for any reason be held or adjudged to be invalid or illegal or unenforceable by any court of competent jurisdiction or other Governmental Authority, (1) such portion or provision shall be deemed separate and independent, (2) the Parties shall negotiate in good faith to restore insofar as practicable the benefits to each Party that were affected by such ruling, and (3) the remainder of this Agreement shall remain in full force and effect.

20.0 Subcontractors

Nothing in this Agreement shall prevent a Party from utilizing the services of any subcontractor as it deems appropriate to perform its obligations under this Agreement; provided, however, that each Party shall require its subcontractors to comply with all applicable terms and conditions of this Agreement in providing such services and each Party shall remain primarily liable to the other Party for the performance of such subcontractor.

20.1 The creation of any subcontract relationship shall not relieve the hiring Party of any of its obligations under this Agreement. The hiring Party shall be fully responsible to the other Party for the acts or omissions of any subcontractor the hiring Party hires as if no subcontract had been made; provided, however, that in no event shall the Transmission Provider be liable for the actions or inactions of the Interconnection Customer or its subcontractors with respect to obligations of the Interconnection Customer under this Agreement. Any applicable obligation imposed by this Agreement upon the hiring Party shall be equally binding upon, and shall be construed as having application to, any subcontractor of such Party.

20.2 The obligations under this article will not be limited in any way by any limitation of subcontractor's insurance.

21.0 Reservation of Rights

The Transmission Provider shall have the right to make a unilateral filing with FERC to modify this Agreement with respect to any rates, terms and conditions, charges, classifications of service, rule or regulation under section 205 or any other applicable provision of the Federal Power Act and FERC's rules and regulations thereunder, and the Interconnection Customer shall have the right to make a unilateral filing with FERC to modify this Agreement under any applicable provision of the Federal Power Act and FERC's rules and regulations; provided that each Party shall have the right to protest any such filing by the other Party and to participate fully in any proceeding before FERC in which such modifications may be considered. Nothing in this Agreement shall limit the rights of the Parties or of FERC under sections 205 or 206 of the Federal Power Act and FERC's rules and regulations, except to the extent that the Parties otherwise agree as provided herein.

IN WITNESS WHEREOF, the Parties have caused this Agreement to be duly executed by their duly authorized officers or agents on the day and year first above written.

[Insert name of Transmission Provider]	**[Insert name of Interconnection Customer]**
_____	_____
Signed_____	Signed_____
Name (Printed):	Name (Printed):
_____	_____
Title_____	Title_____

Attachment A to
Feasibility Study Agreement

Assumptions Used in Conducting the Feasibility Study

The feasibility study will be based upon the information set forth in the Interconnection Request and agreed upon in the scoping meeting held on _____:

1) Designation of Point of Interconnection and configuration to be studied.

2) Designation of alternative Points of Interconnection and configuration.

1) and 2) are to be completed by the Interconnection Customer. Other assumptions (listed below) are to be provided by the Interconnection Customer and the Transmission Provider.

Attachment 7

System Impact Study Agreement

THIS AGREEMENT is made and entered into this_____ day of_____ 20___ by and between_____, a _____, organized and existing under the laws of the State of _____, ("Interconnection Customer,") and _____, a_____ existing under the laws of the State of_____, ("Transmission Provider"). Interconnection Customer and Transmission Provider each may be referred to as a "Party," or collectively as the "Parties."

RECITALS

WHEREAS, the Interconnection Customer is proposing to develop a Small Generating Facility or generating capacity addition to an existing Small Generating Facility consistent with the Interconnection Request completed by the Interconnection Customer on_____; and

WHEREAS, the Interconnection Customer desires to interconnect the Small Generating Facility with the Transmission Provider's Transmission System;

WHEREAS, the Transmission Provider has completed a feasibility study and provided the results of said study to the Interconnection Customer (This recital to be omitted if the Parties have agreed to forego the feasibility study.); and

WHEREAS, the Interconnection Customer has requested the Transmission Provider to perform a system impact study(s) to assess the impact of interconnecting the Small Generating Facility with the Transmission Provider's Transmission System, and of any Affected Systems;

NOW, THEREFORE, in consideration of and subject to the mutual covenants contained herein the Parties agreed as follows:

1.0 When used in this Agreement, with initial capitalization, the terms specified shall have the meanings indicated or the meanings specified in the standard Small Generator Interconnection Procedures.

2.0 The Interconnection Customer elects and the Transmission Provider shall cause to be performed a system impact study(s) consistent with the standard Small Generator Interconnection Procedures in accordance with the Open Access Transmission Tariff.

3.0 The scope of a system impact study shall be subject to the assumptions set forth in Attachment A to this Agreement.

4.0 A system impact study will be based upon the results of the feasibility study and the technical information provided by Interconnection Customer in the Interconnection Request. The Transmission Provider reserves the right to request additional technical information from the Interconnection Customer as may reasonably become necessary consistent with Good Utility Practice during the course of the system impact study. If the Interconnection Customer modifies its designated Point of Interconnection, Interconnection Request, or the technical information provided therein is modified, the time to complete the system impact study may be extended.

5.0 A system impact study shall consist of a short circuit analysis, a stability analysis, a power flow analysis, voltage drop and flicker studies, protection and set point coordination studies, and grounding reviews, as necessary. A system impact study shall state the assumptions upon which it is based, state the results of the analyses, and provide the requirement or potential impediments to providing the requested interconnection service, including a preliminary indication of the cost and length of time that would be necessary to correct any problems identified in those analyses and implement the interconnection. A system impact study shall provide a list of facilities that are required as a result of the Interconnection Request and non-binding good faith estimates of cost responsibility and time to construct.

6.0 A distribution system impact study shall incorporate a distribution load flow study, an analysis of equipment interrupting ratings, protection coordination study, voltage drop and flicker studies, protection and set point coordination studies, grounding reviews, and the impact on electric system operation, as necessary.

7.0 Affected Systems may participate in the preparation of a system impact study, with a division of costs among such entities as they may agree. All Affected Systems shall be afforded an opportunity to review and comment upon a system impact study that covers potential adverse system impacts on their electric systems, and the Transmission Provider has 20 additional Business Days to complete a system impact study requiring review by Affected Systems.

8.0 If the Transmission Provider uses a queuing procedure for sorting or prioritizing projects and their associated cost responsibilities for any required Network Upgrades, the system impact study shall consider all generating facilities (and with respect to paragraph 8.3 below, any identified Upgrades associated with such higher queued interconnection) that, on the date the system impact study is commenced -

8.1 Are directly interconnected with the Transmission Provider's electric system; or

8.2 Are interconnected with Affected Systems and may have an impact on the proposed interconnection; and

8.3 Have a pending higher queued Interconnection Request to interconnect with the Transmission Provider's electric system.

9.0 A distribution system impact study, if required, shall be completed and the results transmitted to the Interconnection Customer within 30 Business Days after this Agreement is signed by the Parties. A transmission system impact study, if required, shall be completed and the results transmitted to the Interconnection Customer within 45 Business Days after this Agreement is signed by the Parties, or in accordance with the Transmission Provider's queuing procedures.

10.0 A deposit of the equivalent of the good faith estimated cost of a distribution system impact study and the one half the good faith estimated cost of a transmission system impact study may be required from the Interconnection Customer.

11.0 Any study fees shall be based on the Transmission Provider's actual costs and will be invoiced to the Interconnection Customer after the study is completed and delivered and will include a summary of professional time.

12.0 The Interconnection Customer must pay any study costs that exceed the deposit without interest within 30 calendar days on receipt of the invoice or resolution of any dispute. If the deposit exceeds the invoiced fees, the Transmission Provider shall refund such excess within 30 calendar days of the invoice without interest.

13.0 Governing Law, Regulatory Authority, and Rules

The validity, interpretation and enforcement of this Agreement and each of its provisions shall be governed by the laws of the state of _____ (where the Point of Interconnection is located), without regard to its conflicts of law principles. This Agreement is subject to all Applicable Laws and Regulations. Each Party expressly reserves the right to seek changes in, appeal, or otherwise contest any laws, orders, or regulations of a Governmental Authority.

14.0 Amendment

The Parties may amend this Agreement by a written instrument duly executed by both Parties.

15.0 No Third-Party Beneficiaries

This Agreement is not intended to and does not create rights, remedies, or benefits of any character whatsoever in favor of any persons, corporations, associations, or entities other than the Parties, and the obligations herein assumed are solely for the use and benefit of the Parties, their successors in interest and where permitted, their assigns.

16.0 Waiver

16.1 The failure of a Party to this Agreement to insist, on any occasion, upon strict performance of any provision of this Agreement will not be considered a waiver of any obligation, right, or duty of, or imposed upon, such Party.

16.2 Any waiver at any time by either Party of its rights with respect to this Agreement shall not be deemed a continuing waiver or a waiver with respect to any other failure to comply with any other obligation, right, duty of this Agreement.

Termination or default of this Agreement for any reason by Interconnection Customer shall not constitute a waiver of the Interconnection Customer's legal rights to obtain an interconnection from the Transmission Provider. Any waiver of this Agreement shall, if requested, be provided in writing.

17.0 Multiple Counterparts

This Agreement may be executed in two or more counterparts, each of which is deemed an original but all constitute one and the same instrument.

18.0 No Partnership

This Agreement shall not be interpreted or construed to create an association, joint venture, agency relationship, or partnership between the Parties or to impose any partnership obligation or partnership liability upon either Party. Neither Party shall have any right, power or authority to enter into any agreement or undertaking for, or act on behalf of, or to act as or be an agent or representative of, or to otherwise bind, the other Party.

19.0 Severability

If any provision or portion of this Agreement shall for any reason be held or adjudged to be invalid or illegal or unenforceable by any court of competent jurisdiction or other Governmental Authority, (1) such portion or provision shall be deemed separate and independent, (2) the Parties shall negotiate in good faith to restore insofar as practicable the benefits to each Party that were affected by such ruling, and (3) the remainder of this Agreement shall remain in full force and effect.

20.0 Subcontractors

Nothing in this Agreement shall prevent a Party from utilizing the services of any subcontractor as it deems appropriate to perform its obligations under this Agreement; provided, however, that each Party shall require its subcontractors to comply with all applicable terms and conditions of this Agreement in providing such services and each Party shall remain primarily liable to the other Party for the performance of such subcontractor.

20.1 The creation of any subcontract relationship shall not relieve the hiring Party of any of its obligations under this Agreement. The hiring Party shall be fully responsible to the other Party for the acts or omissions of any subcontractor the hiring Party hires as if no subcontract had been made; provided, however, that in no event shall the Transmission Provider be liable for the actions or inactions of the Interconnection Customer or its subcontractors with respect to obligations of the Interconnection Customer under this Agreement. Any applicable obligation imposed by this Agreement upon the hiring Party shall be equally binding upon, and shall be construed as having application to, any subcontractor of such Party.

20.2 The obligations under this article will not be limited in any way by any limitation of subcontractor's insurance.

21.0 Reservation of Rights

The Transmission Provider shall have the right to make a unilateral filing with FERC to modify this Agreement with respect to any rates, terms and conditions, charges, classifications of service, rule or regulation under section 205 or any other applicable provision of the Federal Power Act and FERC's rules and regulations thereunder, and the Interconnection Customer shall have the right to make a unilateral filing with FERC to modify this Agreement under any applicable provision of the Federal Power Act and FERC's rules and regulations; provided that each Party shall have the right to protest any such filing by the other Party and to participate fully in any proceeding before FERC in which such modifications may be considered. Nothing in this Agreement shall limit the rights of the Parties or of FERC under sections 205 or 206 of the Federal Power Act and FERC's rules and regulations, except to the extent that the Parties otherwise agree as provided herein.

IN WITNESS THEREOF, the Parties have caused this Agreement to be duly executed by their duly authorized officers or agents on the day and year first above written.

[Insert name of Transmission Provider]	**[Insert name of Interconnection Customer]**
_____	_____
Signed_____	Signed_____
Name (Printed):	Name (Printed):
_____	_____
Title_____	Title_____

Attachment A to System Impact Study Agreement

Assumptions Used in Conducting the System Impact Study

The system impact study shall be based upon the results of the feasibility study, subject to any modifications in accordance with the standard Small Generator Interconnection Procedures, and the following assumptions:

1) Designation of Point of Interconnection and configuration to be studied.

2) Designation of alternative Points of Interconnection and configuration.

1) and 2) are to be completed by the Interconnection Customer. Other assumptions (listed below) are to be provided by the Interconnection Customer and the Transmission Provider.

Attachment 8

Facilities Study Agreement

THIS AGREEMENT is made and entered into this_____ day of_____ 20___ by and between_____, a _____, organized and existing under the laws of the State of _____, ("Interconnection Customer,") and _____, a_____ existing under the laws of the State of_____, ("Transmission Provider"). Interconnection Customer and Transmission Provider each may be referred to as a "Party," or collectively as the "Parties."

RECITALS

WHEREAS, the Interconnection Customer is proposing to develop a Small Generating Facility or generating capacity addition to an existing Small Generating Facility consistent with the Interconnection Request completed by the Interconnection Customer on_____; and

WHEREAS, the Interconnection Customer desires to interconnect the Small Generating Facility with the Transmission Provider's Transmission System;

WHEREAS, the Transmission Provider has completed a system impact study and provided the results of said study to the Interconnection Customer; and

WHEREAS, the Interconnection Customer has requested the Transmission Provider to perform a facilities study to specify and estimate the cost of the equipment, engineering, procurement and construction work needed to implement the conclusions of the system impact study in accordance with Good Utility Practice to physically and electrically connect the Small Generating Facility with the Transmission Provider's Transmission System.

NOW, THEREFORE, in consideration of and subject to the mutual covenants contained herein the Parties agreed as follows:

1.0 When used in this Agreement, with initial capitalization, the terms specified shall have the meanings indicated or the meanings specified in the standard Small Generator Interconnection Procedures.

2.0 The Interconnection Customer elects and the Transmission Provider shall cause a facilities study consistent with the standard Small Generator Interconnection Procedures to be performed in accordance with the Open Access Transmission Tariff.

3.0 The scope of the facilities study shall be subject to data provided in Attachment A to this Agreement.

4.0 The facilities study shall specify and estimate the cost of the equipment, engineering, procurement and construction work (including overheads) needed to implement the conclusions of the system impact study(s). The facilities study shall also identify (1) the electrical switching configuration of the equipment, including, without limitation, transformer, switchgear, meters, and other station equipment, (2) the nature and estimated cost of the Transmission Provider's Interconnection Facilities and Upgrades necessary to accomplish the interconnection, and (3) an estimate of the time required to complete the construction and installation of such facilities.

5.0 The Transmission Provider may propose to group facilities required for more than one Interconnection Customer in order to minimize facilities costs through economies of scale, but any Interconnection Customer may require the installation of facilities required for its own Small Generating Facility if it is willing to pay the costs of those facilities.

6.0 A deposit of the good faith estimated facilities study costs may be required from the Interconnection Customer.

7.0 In cases where Upgrades are required, the facilities study must be completed within 45 Business Days of the receipt of this Agreement. In cases where no Upgrades are necessary, and the required facilities are limited to Interconnection Facilities, the facilities study must be completed within 30 Business Days.

8.0 Once the facilities study is completed, a draft facilities study report shall be prepared and transmitted to the Interconnection Customer. Barring unusual circumstances, the facilities study must be completed and the draft facilities study report transmitted within 30 Business Days of the Interconnection Customer's agreement to conduct a facilities study.

9.0 Interconnection Customer may, within 30 Calendar Days after receipt of the draft report, provide written comments to Transmission Provider, which Transmission Provider shall include in the final report. Transmission Provider shall issue the final Interconnection Facilities Study report within 15 Business Days of receiving Interconnection Customer’s comments or promptly upon receiving Interconnection Customer’s statement that it will not provide comments. Transmission Provider may reasonably extend such fifteen-day period upon notice to Interconnection Customer if Interconnection Customer’s comments require Transmission Provider to perform additional analyses or make other significant modifications prior to the issuance of the final Interconnection Facilities Report. Upon request, Transmission Provider shall provide Interconnection Customer supporting documentation, workpapers, and databases or data developed in the preparation of the Interconnection Facilities Study, subject to confidentiality arrangements consistent with Section 4.5 of the standard Small Generator Interconnection Procedures.

10. Within ten 10 Business Days of providing a draft Interconnection Facilities Study report to Interconnection Customer, Transmission Provider and Interconnection Customer shall meet to discuss the results of the Interconnection Facilities Study.

11.0 Any study fees shall be based on the Transmission Provider's actual costs and will be invoiced to the Interconnection Customer after the study is completed and delivered and will include a summary of professional time.

12.0 The Interconnection Customer must pay any study costs that exceed the deposit without interest within 30 calendar days on receipt of the invoice or resolution of any dispute. If the deposit exceeds the invoiced fees, the Transmission Provider shall refund such excess within 30 calendar days of the invoice without interest.

13.0 Governing Law, Regulatory Authority, and Rules

The validity, interpretation and enforcement of this Agreement and each of its provisions shall be governed by the laws of the state of _____ (where the Point of Interconnection is located), without regard to its conflicts of law principles. This Agreement is subject to all Applicable Laws and Regulations. Each Party expressly reserves the right to seek changes in, appeal, or otherwise contest any laws, orders, or regulations of a Governmental Authority.

14.0 Amendment

The Parties may amend this Agreement by a written instrument duly executed by both Parties.

15.0 No Third-Party Beneficiaries

This Agreement is not intended to and does not create rights, remedies, or benefits of any character whatsoever in favor of any persons, corporations, associations, or entities other than the Parties, and the obligations herein assumed are solely for the use and benefit of the Parties, their successors in interest and where permitted, their assigns.

16.0 Waiver

16.1 The failure of a Party to this Agreement to insist, on any occasion, upon strict performance of any provision of this Agreement will not be considered a waiver of any obligation, right, or duty of, or imposed upon, such Party.

16.2 Any waiver at any time by either Party of its rights with respect to this Agreement shall not be deemed a continuing waiver or a waiver with respect to any other failure to comply with any other obligation, right, duty of this Agreement. Termination or default of this Agreement for any reason by Interconnection Customer shall not constitute a waiver of the Interconnection Customer's legal rights to obtain an interconnection from the Transmission Provider. Any waiver of this Agreement shall, if requested, be provided in writing.

17.0 Multiple Counterparts

This Agreement may be executed in two or more counterparts, each of which is deemed an original but all constitute one and the same instrument.

18.0 No Partnership

This Agreement shall not be interpreted or construed to create an association, joint venture, agency relationship, or partnership between the Parties or to impose any partnership obligation or partnership liability upon either Party. Neither Party shall have any right, power or authority to enter into any agreement or undertaking for, or act on behalf of, or to act as or be an agent or representative of, or to otherwise bind, the other Party.

19.0 Severability

If any provision or portion of this Agreement shall for any reason be held or adjudged to be invalid or illegal or unenforceable by any court of competent jurisdiction or other Governmental Authority, (1) such portion or provision shall be deemed separate and independent, (2) the Parties shall negotiate in good faith to restore insofar as practicable the benefits to each Party that were affected by such ruling, and (3) the remainder of this Agreement shall remain in full force and effect.

20.0 Subcontractors

Nothing in this Agreement shall prevent a Party from utilizing the services of any subcontractor as it deems appropriate to perform its obligations under this Agreement; provided, however, that each Party shall require its subcontractors to comply with all applicable terms and conditions of this Agreement in providing such services and each Party shall remain primarily liable to the other Party for the performance of such subcontractor.

20.1 The creation of any subcontract relationship shall not relieve the hiring Party of any of its obligations under this Agreement. The hiring Party shall be fully responsible to the other Party for the acts or omissions of any subcontractor the hiring Party hires as if no subcontract had been made; provided, however, that in no event shall the Transmission Provider be liable for the actions or inactions of the Interconnection Customer or its subcontractors with respect to obligations of the Interconnection Customer under this Agreement. Any applicable obligation imposed by this Agreement upon the hiring Party shall be equally binding upon, and shall be construed as having application to, any subcontractor of such Party.

20.2 The obligations under this article will not be limited in any way by any limitation of subcontractor's insurance.

21.0 Reservation of Rights

The Transmission Provider shall have the right to make a unilateral filing with FERC to modify this Agreement with respect to any rates, terms and conditions, charges, classifications of service, rule or regulation under section 205 or any other applicable provision of the Federal Power Act and FERC's rules and regulations thereunder, and the Interconnection Customer shall have the right to make a unilateral filing with FERC to modify this Agreement under any applicable provision of the Federal Power Act and FERC's rules and regulations; provided that each Party shall have the right to protest any such filing by the other Party and to participate fully in any proceeding before FERC in

which such modifications may be considered. Nothing in this Agreement shall limit the rights of the Parties or of FERC under sections 205 or 206 of the Federal Power Act and FERC's rules and regulations, except to the extent that the Parties otherwise agree as provided herein.

IN WITNESS WHEREOF, the Parties have caused this Agreement to be duly executed by their duly authorized officers or agents on the day and year first above written.

[Insert name of Transmission Provider]	**[Insert name of Interconnection Customer]**
_____	_____
Signed_____	Signed_____
Name (Printed):	Name (Printed):
_____	_____
Title_____	Title_____

Attachment A to
Facilities Study Agreement

Data to Be Provided by the Interconnection Customer with the Facilities Study Agreement

Provide location plan and simplified one-line diagram of the plant and station facilities. For staged projects, please indicate future generation, transmission circuits, etc.

On the one-line diagram, indicate the generation capacity attached at each metering location. (Maximum load on CT/PT)

On the one-line diagram, indicate the location of auxiliary power. (Minimum load on CT/PT) Amps

One set of metering is required for each generation connection to the new ring bus or existing Transmission Provider station. Number of generation connections: _____

Will an alternate source of auxiliary power be available during CT/PT maintenance?
Yes _____ No _____

Will a transfer bus on the generation side of the metering require that each meter set be designed for the total plant generation? Yes _____ No _____
(Please indicate on the one-line diagram).

What type of control system or PLC will be located at the Small Generating Facility?

_____

_____

What protocol does the control system or PLC use?

_____

_____

Please provide a 7.5-minute quadrangle map of the site. Indicate the plant, station, transmission line, and property lines.

Physical dimensions of the proposed interconnection station:

_____

Bus length from generation to interconnection station:

_____

Line length from interconnection station to Transmission Provider's Transmission System.

_____

Tower number observed in the field. (Painted on tower leg)*:

_____

Number of third party easements required for transmission lines*:

_____

* To be completed in coordination with Transmission Provider.

Is the Small Generating Facility located in Transmission Provider's service area?

Yes _____ No _____ If No, please provide name of local provider:

_____

Please provide the following proposed schedule dates:

Begin Construction Date:_____

Generator step-up transformers receive back feed power Date:_____

Generation Testing Date:_____

Commercial Operation Date:_____

Attachment 9

SMALL GENERATOR INTERCONNECTION AGREEMENT (SGIA)

(For Generating Facilities No Larger Than 20 MW)

TABLE OF CONTENTS

Article 1. Scope and Limitations of Agreement .....

1.1 Applicability .....

1.2 Purpose.....

1.3 No Agreement To Purchase Or Deliver Power.....

1.4 Limitations .....

1.5 Responsibilities of the Parties.....

1.6 Parallel Operation Obligations.....

1.7 Metering.....

1.8 Reactive Power and Primary Frequency Response .....

1.8.1 Power Factor Design Criteria……...

1.8.1.1 Synchronous Generation.……

1.8.1.2 Non-Synchronous Generation..……

1.8.4 Primary Frequency Response……...

1.8.4.1 Governor or Equivalent Controls…..……

1.8.4.2 Timely and Sustained Response……

1.8.4.3 Exemptions.…….……

1.8.4.4 Electric Storage Resources..…….……

Article 2. Inspection, Testing, Authorization, and Right of Access .....

2.1 Equipment Testing and Inspection.....

2.2 Authorization Required Prior to Parallel Operation .....

2.3 Right of Access.....

Article 3. Effective Date, Term, Termination, and Disconnection.....

3.1 Effective Date .....

3.2 Term of Agreement.....

3.3 Termination.....

3.4 Temporary Disconnection.....

3.4.1 Emergency Conditions.....

3.4.2 Routine Maintenance, Construction, and Repair .....

3.4.3 Forced Outages .....

3.4.4 Adverse Operating Effects.....

3.4.5 Modification of the Small Generating Facility .....

3.4.6 Reconnection.....

Article 4. Cost Responsibility for Interconnection Facilities and Distribution Upgrades .....

4.1 Interconnection Facilities.....

4.2 Distribution Upgrades
Article 5. Cost Responsibility for Network Upgrades
5.1 Applicability
5.2 Network Upgrades
5.2.1 Repayment of Amounts Advanced for Network Upgrades
5.3 Special Provisions for Affected Systems
5.4 Rights Under Other Agreements
Article 6. Billing, Payment, Milestones, and Financial Security
6.1 Billing and Payment Procedures and Final Accounting
6.2 Milestones
6.3 Financial Security Arrangements
Article 7. Assignment, Liability, Indemnity, Force Majeure, Consequential Damages, and Default
7.1 Assignment
7.2 Limitation of Liability
7.3 Indemnity
7.4 Consequential Damages
7.5 Force Majeure
7.6 Default
Article 8. Insurance
Article 9. Confidentiality
Article 10. Disputes
Article 11. Taxes
Article 12. Miscellaneous
12.1 Governing Law, Regulatory Authority, and Rules
12.2 Amendment
12.3 No Third-Party Beneficiaries
12.4 Waiver
12.5 Entire Agreement
12.6 Multiple Counterparts
12.7 No Partnership
12.8 Severability
12.9 Security Arrangements
12.10 Environmental Releases
12.11 Subcontractors
12.12 Reservation of Rights
Article 13. Notices
13.1 General

13.2 Billing and Payment.....
13.3 Alternative Forms of Notice .....
13.4 Designated Operating Representative.....
13.5 Changes to the Notice Information.....
Article 14. Signatures.....
Attachment 1 - Glossary of Terms.....
Attachment 2 - Description and Costs of the Small Generating Facility, Interconnection Facilities, and Metering Equipment.....
Attachment 3 - One-line Diagram Depicting the Small Generating Facility, Interconnection Facilities, Metering Equipment, and Upgrades .....
Attachment 4 - Milestones.....
Attachment 5 - Additional Operating Requirements for the Transmission Provider's Transmission System and Affected Systems Needed to Support the Interconnection Customer's Needs .....
Attachment 6 - Transmission Provider's Description of its Upgrades and Best Estimate of Upgrade Costs.....

This Interconnection Agreement ("Agreement") is made and entered into this _____ day of _____, 20__, by _____ ("Transmission Provider"), and _____ ("Interconnection Customer") each hereinafter sometimes referred to individually as "Party" or both referred to collectively as the "Parties."

Transmission Provider Information

Transmission Provider: _____
Attention: _____
Address: _____
City: _____ State: _____ Zip: _____
Phone: _____ Fax: _____

Interconnection Customer Information

Interconnection Customer: _____
Attention: _____
Address: _____
City: _____ State: _____ Zip: _____
Phone: _____ Fax: _____

Interconnection Customer Application No: _____

In consideration of the mutual covenants set forth herein, the Parties agree as follows:

Article 1. Scope and Limitations of Agreement

1.1 This Agreement shall be used for all Interconnection Requests submitted under the Small Generator Interconnection Procedures (SGIP) except for those submitted under the 10 kW Inverter Process contained in SGIP Attachment 5.

1.2 This Agreement governs the terms and conditions under which the Interconnection Customer's Small Generating Facility will interconnect with, and operate in parallel with, the Transmission Provider's Transmission System.

1.3 This Agreement does not constitute an agreement to purchase or deliver the Interconnection Customer's power. The purchase or delivery of power and other services that the Interconnection Customer may require will be covered under separate agreements if any. The Interconnection Customer will be responsible for separately making all necessary arrangements (including scheduling) for delivery of electricity with the applicable Transmission Provider.

1.4 Nothing in this Agreement is intended to affect any other agreement between the Transmission Provider and the Interconnection Customer.

1.5 Responsibilities of the Parties

1.5.1 The Parties shall perform all obligations of this Agreement in accordance with all Applicable Laws and Regulations, Operating Requirements, and Good Utility Practice.

1.5.2 The Interconnection Customer shall construct, interconnect, operate and maintain its Small Generating Facility and construct, operate, and maintain its Interconnection Facilities in accordance with the applicable manufacturer's recommended maintenance schedule, and in accordance with this Agreement, and with Good Utility Practice.

1.5.3 The Transmission Provider shall construct, operate, and maintain its Transmission System and Interconnection Facilities in accordance with this Agreement, and with Good Utility Practice.

1.5.4 The Interconnection Customer agrees to construct its facilities or systems in accordance with applicable specifications that meet or exceed those provided by the National Electrical Safety Code, the American National Standards Institute, IEEE, Underwriter's Laboratory, and Operating Requirements in effect at the time of construction and other applicable national and state codes and standards. The Interconnection Customer agrees to design, install, maintain, and operate its Small Generating Facility so as to reasonably minimize the likelihood of a disturbance adversely affecting or impairing the system or equipment of the Transmission Provider and any Affected Systems.

1.5.5 Each Party shall operate, maintain, repair, and inspect, and shall be fully responsible for the facilities that it now or subsequently may own unless otherwise specified in the Attachments to this Agreement. Each Party shall be responsible for the safe installation, maintenance, repair and condition of their respective lines and appurtenances on their respective sides of the point of change of ownership. The Transmission Provider and the Interconnection Customer, as appropriate, shall provide Interconnection Facilities that adequately protect the Transmission Provider's Transmission System, personnel, and other persons from damage and injury. The allocation of responsibility for the design, installation, operation, maintenance and ownership of Interconnection Facilities shall be delineated in the Attachments to this Agreement.

1.5.6 The Transmission Provider shall coordinate with all Affected Systems to support the interconnection.

1.5.7 The Interconnection Customer shall ensure “frequency ride through” capability and “voltage ride through” capability of its Small Generating Facility. The Interconnection Customer shall enable these capabilities such that its Small Generating Facility shall not disconnect automatically or instantaneously from the system or equipment of the Transmission Provider and any Affected Systems for

a defined under-frequency or over-frequency condition, or an under-voltage or over-voltage condition, as tested pursuant to section 2.1 of this agreement. The defined conditions shall be in accordance with Good Utility Practice and consistent with any standards and guidelines that are applied to other generating facilities in the Balancing Authority Area on a comparable basis. The Small Generating Facility's protective equipment settings shall comply with the Transmission Provider's automatic load-shed program. The Transmission Provider shall review the protective equipment settings to confirm compliance with the automatic load-shed program. The term "ride through" as used herein shall mean the ability of a Small Generating Facility to stay connected to and synchronized with the system or equipment of the Transmission Provider and any Affected Systems during system disturbances within a range of conditions, in accordance with Good Utility Practice and consistent with any standards and guidelines that are applied to other generating facilities in the Balancing Authority on a comparable basis. The term "frequency ride through" as used herein shall mean the ability of a Small Generating Facility to stay connected to and synchronized with the system or equipment of the Transmission Provider and any Affected Systems during system disturbances within a range of under-frequency and over-frequency conditions, in accordance with Good Utility Practice and consistent with any standards and guidelines that are applied to other generating facilities in the Balancing Authority Area on a comparable basis. The term "voltage ride through" as used herein shall mean the ability of a Small Generating Facility to stay connected to and synchronized with the system or equipment of the Transmission Provider and any Affected Systems during system disturbances within a range of under-voltage and over-voltage conditions, in accordance with Good Utility Practice and consistent with any standards and guidelines that are applied to other generating facilities in the Balancing Authority Area on a comparable basis.

1.6 Parallel Operation Obligations

Once the Small Generating Facility has been authorized to commence parallel operation, the Interconnection Customer shall abide by all rules and procedures pertaining to the parallel operation of the Small Generating Facility in the applicable control area, including, but not limited to; 1) the rules and procedures concerning the operation of generation set forth in the Tariff or by the applicable system operator(s) for the Transmission Provider's Transmission System and; 2) the Operating Requirements set forth in Attachment 5 of this Agreement.

1.7 Metering

The Interconnection Customer shall be responsible for the Transmission Provider's reasonable and necessary cost for the purchase, installation, operation, maintenance, testing, repair, and replacement of metering and data acquisition equipment specified in Attachments 2 and 3 of this Agreement. The Interconnection Customer's metering (and data acquisition, as required) equipment shall conform to applicable industry rules and Operating Requirements.

1.8 Reactive Power and Primary Frequency Response

1.8.1 Power Factor Design Criteria

1.8.1.1 Synchronous Generation. The Interconnection Customer shall design its Small Generating Facility to maintain a composite power delivery at continuous rated power output at the Point of Interconnection at a power factor within the range of 0.95 leading to 0.95 lagging, unless the Transmission Provider has established different requirements that apply to all similarly situated synchronous generators in the control area on a comparable basis.

1.8.1.2 Non-Synchronous Generation. Interconnection Customer shall design the Small Generating Facility to maintain a composite power delivery at continuous rated power output at the high-side of the generator substation at a power factor within the range of 0.95 leading to 0.95 lagging, unless the Transmission Provider has established a different power factor range that applies to all non-synchronous generators in the Control Area on a comparable basis. This power factor range standard shall be dynamic and can be met using, for example, power electronics designed to supply this level of reactive capability (taking into account any limitations due to voltage level, real power output, etc.) or fixed and switched capacitors, or a combination of the two. This requirement shall only apply to newly interconnecting non-synchronous generators that have not yet executed a Facilities Study Agreement as of the effective date of the Final Rule establishing this requirement (Order No. 827).

1.8.2 The Transmission Provider is required to pay the Interconnection Customer for reactive power that the Interconnection Customer provides or absorbs from the Small Generating Facility when the Transmission Provider requests the Interconnection Customer to operate its Small Generating Facility outside the range specified in article 1.8.1. In addition, if the Transmission Provider pays its own or affiliated generators for reactive power service within the specified range, it must also pay the Interconnection Customer.

1.8.3 Payments shall be in accordance with the Interconnection Customer's applicable rate schedule then in effect unless the provision of such service(s) is subject to a regional transmission organization or independent system operator FERC-approved rate schedule. To the extent that no rate schedule is in effect at the time the Interconnection Customer is required to provide or absorb reactive power under this Agreement, the Parties agree to expeditiously file such rate schedule and agree to support any request for waiver of the Commission's prior notice requirement in order to compensate the Interconnection Customer from the time service commenced.

1.8.4 **Primary Frequency Response.** Interconnection Customer shall ensure the primary frequency response capability of its Small Generating Facility by installing, maintaining, and operating a functioning governor or equivalent controls. The term "functioning governor or equivalent controls" as used herein shall mean the required hardware and/or software that provides frequency responsive real power control with the ability to sense changes in system frequency and autonomously adjust the Small Generating Facility's real power output in accordance with the droop and deadband parameters and in the direction needed to correct frequency deviations. Interconnection Customer is required to install a governor or equivalent controls with the capability of operating: (1) with a maximum 5 percent droop and ±0.036 Hz deadband;. or (2) in accordance with the relevant droop, deadband, and timely and sustained response settings from an approved NERC Reliability Standard providing for equivalent or more stringent parameters. The droop characteristic shall be: (1) based on the nameplate capacity of the Small Generating Facility, and shall be linear in the range of frequencies between 59 to 61 Hz that are outside of the deadband parameter; or (2) based on an approved NERC Reliability Standard providing for an equivalent or more stringent parameter. The deadband parameter shall be: the range of frequencies above and below nominal (60 Hz) in which the governor or equivalent controls is not expected to adjust the Small Generating Facility's real power output in response to frequency deviations. The deadband shall be implemented: (1) without a step to the droop curve, that is, once the frequency deviation exceeds the deadband parameter, the expected change in the Small Generating Facility's real power output in response to frequency deviations shall start from zero and then increase (for under-frequency deviations) or decrease (for over-frequency deviations) linearly in proportion to the magnitude of the frequency deviation; or (2) in accordance with an approved NERC Reliability Standard providing for an equivalent or more stringent parameter. Interconnection Customer shall notify Transmission Provider that the primary frequency response capability of the Small Generating Facility has been tested and confirmed during commissioning. Once Interconnection Customer has synchronized the Small Generating Facility with the Transmission System, Interconnection Customer shall operate the Small Generating Facility consistent with the provisions specified in Sections 1.8.4.1 and 1.8.4.2 of this Agreement. The primary frequency response requirements contained herein shall apply to both synchronous and non-synchronous Small Generating Facilities.

1.8.4.1 **Governor or Equivalent Controls.** Whenever the Small Generating Facility is operated in parallel with the Transmission System, Interconnection Customer shall operate the Small Generating Facility with its governor or equivalent controls in service and responsive to frequency. Interconnection Customer shall: (1) in coordination with Transmission Provider and/or the relevant balancing authority, set the deadband parameter to: (1) a maximum of ±0.036 Hz and set the droop parameter to a maximum of 5 percent; or (2) implement the relevant droop and deadband

settings from an approved NERC Reliability Standard that provides for equivalent or more stringent parameters. Interconnection Customer shall be required to provide the status and settings of the governor or equivalent controls to Transmission Provider and/or the relevant balancing authority upon request. If Interconnection Customer needs to operate the Small Generating Facility with its governor or equivalent controls not in service, Interconnection Customer shall immediately notify Transmission Provider and the relevant balancing authority, and provide both with the following information: (1) the operating status of the governor or equivalent controls (i.e., whether it is currently out of service or when it will be taken out of service); (2) the reasons for removing the governor or equivalent controls from service; and (3) a reasonable estimate of when the governor or equivalent controls will be returned to service. Interconnection Customer shall make Reasonable Efforts to return its governor or equivalent controls into service as soon as practicable. Interconnection Customer shall make Reasonable Efforts to keep outages of the Small Generating Facility's governor or equivalent controls to a minimum whenever the Small Generating Facility is operated in parallel with the Transmission System.

1.8.4.2 **Timely and Sustained Response.** Interconnection Customer shall ensure that the Small Generating Facility's real power response to sustained frequency deviations outside of the deadband setting is automatically provided and shall begin immediately after frequency deviates outside of the deadband, and to the extent the Small Generating Facility has operating capability in the direction needed to correct the frequency deviation. Interconnection Customer shall not block or otherwise inhibit the ability of the governor or equivalent controls to respond and shall ensure that the response is not inhibited, except under certain operational constraints including, but not limited to, ambient temperature limitations, physical energy limitations, outages of mechanical equipment, or regulatory requirements. The Small Generating Facility shall sustain the real power response at least until system frequency returns to a value within the deadband setting of the governor or equivalent controls. A Commission-approved Reliability Standard with equivalent or more stringent requirements shall supersede the above requirements.

1.8.4.3 **Exemptions.** Small Generating Facilities that are regulated by the United States Nuclear Regulatory Commission shall be exempt from Sections 1.8.4, 1.8.4.1, and 1.8.4.2 of this Agreement. Small Generating Facilities that are behind the meter generation that is sized-to-load (i.e., the thermal load and the generation are near-

balanced in real-time operation and the generation is primarily controlled to maintain the unique thermal, chemical, or mechanical output necessary for the operating requirements of its host facility) shall be required to install primary frequency response capability in accordance with the droop and deadband capability requirements specified in Section 1.8.4, but shall be otherwise exempt from the operating requirements in Sections 1.8.4, 1.8.4.1, 1.8.4.2, and 1.8.4.4 of this Agreement.

1.8.4.4 **Electric Storage Resources.** Interconnection Customer interconnecting an electric storage resource shall establish an operating range in Attachment 5 of its SGIA that specifies a minimum state of charge and a maximum state of charge between which the electric storage resource will be required to provide primary frequency response consistent with the conditions set forth in Sections 1.8.4, 1.8.4.1, 1.8.4.2 and 1.8.4.3 of this Agreement.

Attachment 5 shall specify whether the operating range is static or dynamic, and shall consider: (1) the expected magnitude of frequency deviations in the interconnection; (2) the expected duration that system frequency will remain outside of the deadband parameter in the interconnection; (3) the expected incidence of frequency deviations outside of the deadband parameter in the interconnection; (4) the physical capabilities of the electric storage resource; (5) operational limitations of the electric storage resource due to manufacturer specifications; and (6) any other relevant factors agreed to by Transmission Provider and Interconnection Customer, and in consultation with the relevant transmission owner or balancing authority as appropriate. If the operating range is dynamic, then Attachment 5 must establish how frequently the operating range will be reevaluated and the factors that may be considered during its reevaluation.

Interconnection Customer's electric storage resource is required to provide timely and sustained primary frequency response consistent with Section 1.8.4.2 of this Agreement when it is online and dispatched to inject electricity to the Transmission System and/or receive electricity from the Transmission System. This excludes circumstances when the electric storage resource is not dispatched to inject electricity to the Transmission System and/or dispatched to receive electricity from the Transmission System. If Interconnection Customer's electric storage resource is charging at the time of a frequency deviation outside of its deadband parameter, it is to increase (for over-frequency deviations) or decrease (for under-frequency deviations) the rate at which it is charging in accordance with its droop parameter. Interconnection

Customer's electric storage resource is not required to change from charging to discharging, or vice versa, unless the response necessitated by the droop and deadband settings requires it to do so and it is technically capable of making such a transition.

1.9 Capitalized terms used herein shall have the meanings specified in the Glossary of Terms in Attachment 1 or the body of this Agreement.

[1.10 If Interconnection Customer and Transmission Provider are one and the same: Interconnection Customer and Transmission Provider are one and the same, and therefore the provisions set forth in Articles 5.2.1 and 6.3 of this Agreement shall not apply.]

Article 2. Inspection, Testing, Authorization, and Right of Access

2.1 Equipment Testing and Inspection

2.1.1 The Interconnection Customer shall test and inspect its Small Generating Facility and Interconnection Facilities prior to interconnection. The Interconnection Customer shall notify the Transmission Provider of such activities no fewer than five Business Days (or as may be agreed to by the Parties) prior to such testing and inspection. Testing and inspection shall occur on a Business Day. The Transmission Provider may, at its own expense, send qualified personnel to the Small Generating Facility site to inspect the interconnection and observe the testing. The Interconnection Customer shall provide the Transmission Provider a written test report when such testing and inspection is completed.

2.1.2 The Transmission Provider shall provide the Interconnection Customer written acknowledgment that it has received the Interconnection Customer's written test report. Such written acknowledgment shall not be deemed to be or construed as any representation, assurance, guarantee, or warranty by the Transmission Provider of the safety, durability, suitability, or reliability of the Small Generating Facility or any associated control, protective, and safety devices owned or controlled by the Interconnection Customer or the quality of power produced by the Small Generating Facility.

2.2 Authorization Required Prior to Parallel Operation

2.2.1 The Transmission Provider shall use Reasonable Efforts to list applicable parallel operation requirements in Attachment 5 of this Agreement. Additionally, the Transmission Provider shall notify the Interconnection Customer of any changes to these requirements as soon as they are known. The Transmission Provider shall make Reasonable Efforts to cooperate with the Interconnection Customer in meeting requirements necessary for the Interconnection Customer to commence parallel operations by the in-service date.

2.2.2 The Interconnection Customer shall not operate its Small Generating Facility in parallel with the Transmission Provider's Transmission System without prior written authorization of the Transmission Provider. The Transmission Provider will provide such authorization once the Transmission Provider receives notification that the Interconnection Customer has complied with all applicable parallel operation requirements. Such authorization shall not be unreasonably withheld, conditioned, or delayed.

2.3 Right of Access

2.3.1 Upon reasonable notice, the Transmission Provider may send a qualified person to the premises of the Interconnection Customer at or immediately before the time the Small Generating Facility first produces energy to inspect the interconnection, and observe the commissioning of the Small Generating Facility (including any required testing), startup, and operation for a period of up to three Business Days after initial start-up of the unit. In addition, the Interconnection Customer shall notify the Transmission Provider at least five Business Days prior to conducting any on-site verification testing of the Small Generating Facility.

2.3.2 Following the initial inspection process described above, at reasonable hours, and upon reasonable notice, or at any time without notice in the event of an emergency or hazardous condition, the Transmission Provider shall have access to the Interconnection Customer's premises for any reasonable purpose in connection with the performance of the obligations imposed on it by this Agreement or if necessary to meet its legal obligation to provide service to its customers.

2.3.3 Each Party shall be responsible for its own costs associated with following this article.

Article 3. Effective Date, Term, Termination, and Disconnection

3.1 Effective Date

This Agreement shall become effective upon execution by the Parties subject to acceptance by FERC (if applicable), or if filed unexecuted, upon the date specified by the FERC. The Transmission Provider shall promptly file this Agreement with the FERC upon execution, if required.

3.2 Term of Agreement

This Agreement shall become effective on the Effective Date and shall remain in effect for a period of ten years from the Effective Date or such other longer period as the Interconnection Customer may request and shall be automatically renewed for each successive one-year period thereafter, unless terminated earlier in accordance with article 3.3 of this Agreement.

3.3 Termination

No termination shall become effective until the Parties have complied with all Applicable Laws and Regulations applicable to such termination, including the filing with FERC of a notice of termination of this Agreement (if required), which notice has been accepted for filing by FERC.

3.3.1 The Interconnection Customer may terminate this Agreement at any time by giving the Transmission Provider 20 Business Days written notice.

3.3.2 Either Party may terminate this Agreement after Default pursuant to article 7.6.

3.3.3 Upon termination of this Agreement, the Small Generating Facility will be disconnected from the Transmission Provider's Transmission System. All costs required to effectuate such disconnection shall be borne by the terminating Party, unless such termination resulted from the non-terminating Party's Default of this SGIA or such non-terminating Party otherwise is responsible for these costs under this SGIA.

3.3.4 The termination of this Agreement shall not relieve either Party of its liabilities and obligations, owed or continuing at the time of the termination.

3.3.5 The provisions of this article shall survive termination or expiration of this Agreement.

3.4 Temporary Disconnection

Temporary disconnection shall continue only for so long as reasonably necessary under Good Utility Practice.

3.4.1 Emergency Conditions -- "Emergency Condition" shall mean a condition or situation: (1) that in the judgment of the Party making the claim is imminently likely to endanger life or property; or (2) that, in the case of the Transmission Provider, is imminently likely (as determined in a non-discriminatory manner) to cause a material adverse effect on the security of, or damage to the Transmission System, the Transmission Provider's Interconnection Facilities or the Transmission Systems of others to which the Transmission System is directly connected; or (3) that, in the case of the Interconnection Customer, is imminently likely (as determined in a non-discriminatory manner) to cause a material adverse effect on the security of, or damage to, the Small Generating Facility or the Interconnection Customer's Interconnection Facilities. Under Emergency Conditions, the Transmission Provider may immediately suspend interconnection service and temporarily disconnect the Small Generating Facility. The Transmission Provider shall notify the Interconnection Customer promptly when it becomes aware of an Emergency Condition that may reasonably be expected to affect the Interconnection Customer's operation of the Small Generating Facility. The Interconnection Customer shall notify the Transmission Provider promptly when it becomes aware of an Emergency Condition that may reasonably be expected to affect the Transmission Provider's Transmission System or any

Affected Systems. To the extent information is known, the notification shall describe the Emergency Condition, the extent of the damage or deficiency, the expected effect on the operation of both Parties' facilities and operations, its anticipated duration, and the necessary corrective action.

3.4.2 Routine Maintenance, Construction, and Repair

The Transmission Provider may interrupt interconnection service or curtail the output of the Small Generating Facility and temporarily disconnect the Small Generating Facility from the Transmission Provider's Transmission System when necessary for routine maintenance, construction, and repairs on the Transmission Provider's Transmission System. The Transmission Provider shall provide the Interconnection Customer with five Business Days notice prior to such interruption. The Transmission Provider shall use Reasonable Efforts to coordinate such reduction or temporary disconnection with the Interconnection Customer.

3.4.3 Forced Outages

During any forced outage, the Transmission Provider may suspend interconnection service to effect immediate repairs on the Transmission Provider's Transmission System. The Transmission Provider shall use Reasonable Efforts to provide the Interconnection Customer with prior notice. If prior notice is not given, the Transmission Provider shall, upon request, provide the Interconnection Customer written documentation after the fact explaining the circumstances of the disconnection.

3.4.4 Adverse Operating Effects

The Transmission Provider shall notify the Interconnection Customer as soon as practicable if, based on Good Utility Practice, operation of the Small Generating Facility may cause disruption or deterioration of service to other customers served from the same electric system, or if operating the Small Generating Facility could cause damage to the Transmission Provider's Transmission System or Affected Systems. Supporting documentation used to reach the decision to disconnect shall be provided to the Interconnection Customer upon request. If, after notice, the Interconnection Customer fails to remedy the adverse operating effect within a reasonable time, the Transmission Provider may disconnect the Small Generating Facility. The Transmission Provider shall provide the Interconnection Customer with five Business Day notice of such disconnection, unless the provisions of article 3.4.1 apply.

3.4.5 Modification of the Small Generating Facility

The Interconnection Customer must receive written authorization from the Transmission Provider before making any change to the Small Generating Facility that may have a material impact on the safety or reliability of the Transmission System. Such authorization shall not be unreasonably withheld. Modifications shall be done in accordance with Good Utility Practice. If the Interconnection Customer makes such modification without the Transmission Provider's prior

written authorization, the latter shall have the right to temporarily disconnect the Small Generating Facility.

3.4.6 Reconnection

The Parties shall cooperate with each other to restore the Small Generating Facility, Interconnection Facilities, and the Transmission Provider's Transmission System to their normal operating state as soon as reasonably practicable following a temporary disconnection.

Article 4. Cost Responsibility for Interconnection Facilities and Distribution Upgrades

4.1 Interconnection Facilities

4.1.1 The Interconnection Customer shall pay for the cost of the Interconnection Facilities itemized in Attachment 2 of this Agreement. The Transmission Provider shall provide a best estimate cost, including overheads, for the purchase and construction of its Interconnection Facilities and provide a detailed itemization of such costs. Costs associated with Interconnection Facilities may be shared with other entities that may benefit from such facilities by agreement of the Interconnection Customer, such other entities, and the Transmission Provider.

4.1.2 The Interconnection Customer shall be responsible for its share of all reasonable expenses, including overheads, associated with (1) owning, operating, maintaining, repairing, and replacing its own Interconnection Facilities, and (2) operating, maintaining, repairing, and replacing the Transmission Provider's Interconnection Facilities.

4.2 Distribution Upgrades

The Transmission Provider shall design, procure, construct, install, and own the Distribution Upgrades described in Attachment 6 of this Agreement. If the Transmission Provider and the Interconnection Customer agree, the Interconnection Customer may construct Distribution Upgrades that are located on land owned by the Interconnection Customer. The actual cost of the Distribution Upgrades, including overheads, shall be directly assigned to the Interconnection Customer.

Article 5. Cost Responsibility for Network Upgrades

5.1 Applicability

No portion of this article 5 shall apply unless the interconnection of the Small Generating Facility requires Network Upgrades.

5.2 Network Upgrades

The Transmission Provider or the Transmission Owner shall design, procure, construct, install, and own the Network Upgrades described in Attachment 6 of this Agreement. If the Transmission Provider and the Interconnection Customer agree, the Interconnection Customer may construct Network Upgrades that are located on land owned by the

Interconnection Customer. Unless the Transmission Provider elects to pay for Network Upgrades, the actual cost of the Network Upgrades, including overheads, shall be borne initially by the Interconnection Customer.

5.2.1 Repayment of Amounts Advanced for Network Upgrades

The Interconnection Customer shall be entitled to a cash repayment, equal to the total amount paid to the Transmission Provider and Affected System operator, if any, for Network Upgrades, including any tax gross-up or other tax-related payments associated with the Network Upgrades, and not otherwise refunded to the Interconnection Customer, to be paid to the Interconnection Customer on a dollar-for-dollar basis for the non-usage sensitive portion of transmission charges, as payments are made under the Transmission Provider's Tariff and Affected System's Tariff for transmission services with respect to the Small Generating Facility. Any repayment shall include interest calculated in accordance with the methodology set forth in FERC's regulations at 18 C.F.R. § 35.19 a(a)(2)(iii) from the date of any payment for Network Upgrades through the date on which the Interconnection Customer receives a repayment of such payment pursuant to this subparagraph. The Interconnection Customer may assign such repayment rights to any person.

5.2.1.1 Notwithstanding the foregoing, the Interconnection Customer, the Transmission Provider, and any applicable Affected System operators may adopt any alternative payment schedule that is mutually agreeable so long as the Transmission Provider and said Affected System operators take one of the following actions no later than five years from the Commercial Operation Date: (1) return to the Interconnection Customer any amounts advanced for Network Upgrades not previously repaid, or (2) declare in writing that the Transmission Provider or any applicable Affected System operators will continue to provide payments to the Interconnection Customer on a dollar-for-dollar basis for the non-usage sensitive portion of transmission charges, or develop an alternative schedule that is mutually agreeable and provides for the return of all amounts advanced for Network Upgrades not previously repaid; however, full reimbursement shall not extend beyond twenty (20) years from the commercial operation date.

5.2.1.2 If the Small Generating Facility fails to achieve commercial operation, but it or another generating facility is later constructed and requires use of the Network Upgrades, the Transmission Provider and Affected System operator shall at that time reimburse the Interconnection Customer for the amounts advanced for the Network Upgrades. Before any such reimbursement can occur, the Interconnection Customer, or the entity that ultimately constructs the generating facility, if different, is responsible for identifying the entity to which reimbursement must be made.

5.3 Special Provisions for Affected Systems

Unless the Transmission Provider provides, under this Agreement, for the repayment of amounts advanced to any applicable Affected System operators for Network Upgrades, the Interconnection Customer and Affected System operator shall enter into an agreement that provides for such repayment. The agreement shall specify the terms governing payments to be made by the Interconnection Customer to Affected System operator as well as the repayment by Affected System operator.

5.4 Rights Under Other Agreements

Notwithstanding any other provision of this Agreement, nothing herein shall be construed as relinquishing or foreclosing any rights, including but not limited to firm transmission rights, capacity rights, transmission congestion rights, or transmission credits, that the Interconnection Customer shall be entitled to, now or in the future, under any other agreement or tariff as a result of, or otherwise associated with, the transmission capacity, if any, created by the Network Upgrades, including the right to obtain cash reimbursements or transmission credits for transmission service that is not associated with the Small Generating Facility.

Article 6. Billing, Payment, Milestones, and Financial Security

6.1 Billing and Payment Procedures and Final Accounting

6.1.1 The Transmission Provider shall bill the Interconnection Customer for the design, engineering, construction, and procurement costs of Interconnection Facilities and Upgrades contemplated by this Agreement on a monthly basis, or as otherwise agreed by the Parties. The Interconnection Customer shall pay each bill within 30 calendar days of receipt, or as otherwise agreed to by the Parties.

6.1.2 Within three months of completing the construction and installation of the Transmission Provider's Interconnection Facilities and/or Upgrades described in the Attachments to this Agreement, the Transmission Provider shall provide the Interconnection Customer with a final accounting report of any difference between (1) the Interconnection Customer's cost responsibility for the actual cost of such facilities or Upgrades, and (2) the Interconnection Customer's previous aggregate payments to the Transmission Provider for such facilities or Upgrades. If the Interconnection Customer's cost responsibility exceeds its previous aggregate payments, the Transmission Provider shall invoice the Interconnection Customer for the amount due and the Interconnection Customer shall make payment to the Transmission Provider within 30 calendar days. If the Interconnection Customer's previous aggregate payments exceed its cost responsibility under this Agreement, the Transmission Provider shall refund to the Interconnection Customer an amount equal to the difference within 30 calendar days of the final accounting report.

6.2 Milestones

The Parties shall agree on milestones for which each Party is responsible and list them in Attachment 4 of this Agreement. A Party's obligations under this provision may be extended by agreement. If a Party anticipates that it will be unable to meet a milestone for any reason other than a Force Majeure Event, it shall immediately notify the other Party of the reason(s) for not meeting the milestone and (1) propose the earliest reasonable alternate date by which it can attain this and future milestones, and (2) requesting appropriate amendments to Attachment 4. The Party affected by the failure to meet a milestone shall not unreasonably withhold agreement to such an amendment unless it will suffer significant uncompensated economic or operational harm from the delay, (2) attainment of the same milestone has previously been delayed, or (3) it has reason to believe that the delay in meeting the milestone is intentional or unwarranted notwithstanding the circumstances explained by the Party proposing the amendment.

6.3 Financial Security Arrangements

At least 20 Business Days prior to the commencement of the design, procurement, installation, or construction of a discrete portion of the Transmission Provider's Interconnection Facilities and Upgrades, the Interconnection Customer shall provide the Transmission Provider, at the Interconnection Customer's option, a guarantee, a surety bond, letter of credit or other form of security that is reasonably acceptable to the Transmission Provider and is consistent with the Uniform Commercial Code of the jurisdiction where the Point of Interconnection is located. Such security for payment shall be in an amount sufficient to cover the costs for constructing, designing, procuring, and installing the applicable portion of the Transmission Provider's Interconnection Facilities and Upgrades and shall be reduced on a dollar-for-dollar basis for payments made to the Transmission Provider under this Agreement during its term. In addition:

6.3.1 The guarantee must be made by an entity that meets the creditworthiness requirements of the Transmission Provider, and contain terms and conditions that guarantee payment of any amount that may be due from the Interconnection Customer, up to an agreed-to maximum amount.

6.3.2 The letter of credit or surety bond must be issued by a financial institution or insurer reasonably acceptable to the Transmission Provider and must specify a reasonable expiration date.

Article 7. Assignment, Liability, Indemnity, Force Majeure, Consequential Damages, and Default

7.1 Assignment

This Agreement may be assigned by either Party upon 15 Business Days prior written notice and opportunity to object by the other Party; provided that:

7.1.1 Either Party may assign this Agreement without the consent of the other Party to any affiliate of the assigning Party with an equal or greater credit rating and with the legal authority and operational ability to satisfy the obligations of the

assigning Party under this Agreement, provided that the Interconnection Customer promptly notifies the Transmission Provider of any such assignment;

7.1.2 The Interconnection Customer shall have the right to assign this Agreement, without the consent of the Transmission Provider, for collateral security purposes to aid in providing financing for the Small Generating Facility, provided that the Interconnection Customer will promptly notify the Transmission Provider of any such assignment.

7.1.3 Any attempted assignment that violates this article is void and ineffective. Assignment shall not relieve a Party of its obligations, nor shall a Party's obligations be enlarged, in whole or in part, by reason thereof. An assignee is responsible for meeting the same financial, credit, and insurance obligations as the Interconnection Customer. Where required, consent to assignment will not be unreasonably withheld, conditioned or delayed.

7.2 Limitation of Liability

Each Party's liability to the other Party for any loss, cost, claim, injury, liability, or expense, including reasonable attorney's fees, relating to or arising from any act or omission in its performance of this Agreement, shall be limited to the amount of direct damage actually incurred. In no event shall either Party be liable to the other Party for any indirect, special, consequential, or punitive damages, except as authorized by this Agreement.

7.3 Indemnity

7.3.1 This provision protects each Party from liability incurred to third parties as a result of carrying out the provisions of this Agreement. Liability under this provision is exempt from the general limitations on liability found in article 7.2.

7.3.2 The Parties shall at all times indemnify, defend, and hold the other Party harmless from, any and all damages, losses, claims, including claims and actions relating to injury to or death of any person or damage to property, demand, suits, recoveries, costs and expenses, court costs, attorney fees, and all other obligations by or to third parties, arising out of or resulting from the other Party's action or failure to meet its obligations under this Agreement on behalf of the indemnifying Party, except in cases of gross negligence or intentional wrongdoing by the indemnified Party.

7.3.3 If an indemnified person is entitled to indemnification under this article as a result of a claim by a third party, and the indemnifying Party fails, after notice and reasonable opportunity to proceed under this article, to assume the defense of such claim, such indemnified person may at the expense of the indemnifying Party contest, settle or consent to the entry of any judgment with respect to, or pay in full, such claim.

7.3.4 If an indemnifying party is obligated to indemnify and hold any indemnified person harmless under this article, the amount owing to the indemnified person shall be the amount of such indemnified person's actual loss, net of any insurance or other recovery.

7.3.5 Promptly after receipt by an indemnified person of any claim or notice of the commencement of any action or administrative or legal proceeding or investigation as to which the indemnity provided for in this article may apply, the indemnified person shall notify the indemnifying party of such fact. Any failure of or delay in such notification shall not affect a Party's indemnification obligation unless such failure or delay is materially prejudicial to the indemnifying party.

7.4 Consequential Damages

Other than as expressly provided for in this Agreement, neither Party shall be liable under any provision of this Agreement for any losses, damages, costs or expenses for any special, indirect, incidental, consequential, or punitive damages, including but not limited to loss of profit or revenue, loss of the use of equipment, cost of capital, cost of temporary equipment or services, whether based in whole or in part in contract, in tort, including negligence, strict liability, or any other theory of liability; provided, however, that damages for which a Party may be liable to the other Party under another agreement will not be considered to be special, indirect, incidental, or consequential damages hereunder.

7.5 Force Majeure

7.5.1 As used in this article, a Force Majeure Event shall mean "any act of God, labor disturbance, act of the public enemy, war, insurrection, riot, fire, storm or flood, explosion, breakage or accident to machinery or equipment, any order, regulation or restriction imposed by governmental, military or lawfully established civilian authorities, or any other cause beyond a Party's control. A Force Majeure Event does not include an act of negligence or intentional wrongdoing."

7.5.2 If a Force Majeure Event prevents a Party from fulfilling any obligations under this Agreement, the Party affected by the Force Majeure Event (Affected Party) shall promptly notify the other Party, either in writing or via the telephone, of the existence of the Force Majeure Event. The notification must specify in reasonable detail the circumstances of the Force Majeure Event, its expected duration, and the steps that the Affected Party is taking to mitigate the effects of the event on its performance. The Affected Party shall keep the other Party informed on a continuing basis of developments relating to the Force Majeure Event until the event ends. The Affected Party will be entitled to suspend or modify its performance of obligations under this Agreement (other than the obligation to make payments) only to the extent that the effect of the Force Majeure Event cannot be mitigated by the use of Reasonable Efforts. The

Affected Party will use Reasonable Efforts to resume its performance as soon as possible.

7.6 Default

7.6.1 No Default shall exist where such failure to discharge an obligation (other than the payment of money) is the result of a Force Majeure Event as defined in this Agreement or the result of an act or omission of the other Party. Upon a Default, the non-defaulting Party shall give written notice of such Default to the defaulting Party. Except as provided in article 7.6.2, the defaulting Party shall have 60 calendar days from receipt of the Default notice within which to cure such Default; provided however, if such Default is not capable of cure within 60 calendar days, the defaulting Party shall commence such cure within 20 calendar days after notice and continuously and diligently complete such cure within six months from receipt of the Default notice; and, if cured within such time, the Default specified in such notice shall cease to exist.

7.6.2 If a Default is not cured as provided in this article, or if a Default is not capable of being cured within the period provided for herein, the non-defaulting Party shall have the right to terminate this Agreement by written notice at any time until cure occurs, and be relieved of any further obligation hereunder and, whether or not that Party terminates this Agreement, to recover from the defaulting Party all amounts due hereunder, plus all other damages and remedies to which it is entitled at law or in equity. The provisions of this article will survive termination of this Agreement.

Article 8. Insurance

8.1 The Interconnection Customer shall, at its own expense, maintain in force general liability insurance without any exclusion for liabilities related to the interconnection undertaken pursuant to this Agreement. The amount of such insurance shall be sufficient to insure against all reasonably foreseeable direct liabilities given the size and nature of the generating equipment being interconnected, the interconnection itself, and the characteristics of the system to which the interconnection is made. The Interconnection Customer shall obtain additional insurance only if necessary as a function of owning and operating a generating facility. Such insurance shall be obtained from an insurance provider authorized to do business in the State where the interconnection is located. Certification that such insurance is in effect shall be provided upon request of the Transmission Provider, except that the Interconnection Customer shall show proof of insurance to the Transmission Provider no later than ten Business Days prior to the anticipated commercial operation date. An Interconnection Customer of sufficient credit-worthiness may propose to self-insure for such liabilities, and such a proposal shall not be unreasonably rejected.

8.2 The Transmission Provider agrees to maintain general liability insurance or self-insurance consistent with the Transmission Provider's commercial practice. Such

insurance or self-insurance shall not exclude coverage for the Transmission Provider's liabilities undertaken pursuant to this Agreement.

8.3 The Parties further agree to notify each other whenever an accident or incident occurs resulting in any injuries or damages that are included within the scope of coverage of such insurance, whether or not such coverage is sought.

Article 9. Confidentiality

9.1 Confidential Information shall mean any confidential and/or proprietary information provided by one Party to the other Party that is clearly marked or otherwise designated "Confidential." For purposes of this Agreement all design, operating specifications, and metering data provided by the Interconnection Customer shall be deemed Confidential Information regardless of whether it is clearly marked or otherwise designated as such.

9.2 Confidential Information does not include information previously in the public domain, required to be publicly submitted or divulged by Governmental Authorities (after notice to the other Party and after exhausting any opportunity to oppose such publication or release), or necessary to be divulged in an action to enforce this Agreement. Each Party receiving Confidential Information shall hold such information in confidence and shall not disclose it to any third party nor to the public without the prior written authorization from the Party providing that information, except to fulfill obligations under this Agreement, or to fulfill legal or regulatory requirements.

9.2.1 Each Party shall employ at least the same standard of care to protect Confidential Information obtained from the other Party as it employs to protect its own Confidential Information.

9.2.2 Each Party is entitled to equitable relief, by injunction or otherwise, to enforce its rights under this provision to prevent the release of Confidential Information without bond or proof of damages, and may seek other remedies available at law or in equity for breach of this provision.

9.3 Notwithstanding anything in this article to the contrary, and pursuant to 18 C.F.R. § 1b.20, if FERC, during the course of an investigation or otherwise, requests information from one of the Parties that is otherwise required to be maintained in confidence pursuant to this Agreement, the Party shall provide the requested information to FERC, within the time provided for in the request for information. In providing the information to FERC, the Party may, consistent with 18 C.F.R. § 388.112, request that the information be treated as confidential and non-public by FERC and that the information be withheld from public disclosure. Parties are prohibited from notifying the other Party to this Agreement prior to the release of the Confidential Information to FERC. The Party shall notify the other Party to this Agreement when it is notified by FERC that a request to release Confidential Information has been received by FERC, at which time either of the Parties may respond before such information would be made public, pursuant to 18 C.F.R. § 388.112. Requests from a state regulatory body conducting a confidential

investigation shall be treated in a similar manner if consistent with the applicable state rules and regulations.

Article 10. Disputes

10.1 The Parties agree to attempt to resolve all disputes arising out of the interconnection process according to the provisions of this article.

10.2 In the event of a dispute, either Party shall provide the other Party with a written Notice of Dispute. Such Notice shall describe in detail the nature of the dispute.

10.3 If the dispute has not been resolved within two Business Days after receipt of the Notice, either Party may contact FERC's Dispute Resolution Service (DRS) for assistance in resolving the dispute.

10.4 The DRS will assist the Parties in either resolving their dispute or in selecting an appropriate dispute resolution venue (e.g., mediation, settlement judge, early neutral evaluation, or technical expert) to assist the Parties in resolving their dispute. DRS can be reached at 1-877-337-2237 or via the internet at http://www.ferc.gov/legal/adr.asp.

10.5 Each Party agrees to conduct all negotiations in good faith and will be responsible for one-half of any costs paid to neutral third-parties.

10.6 If neither Party elects to seek assistance from the DRS, or if the attempted dispute resolution fails, then either Party may exercise whatever rights and remedies it may have in equity or law consistent with the terms of this Agreement.

Article 11. Taxes

11.1 The Parties agree to follow all applicable tax laws and regulations, consistent with FERC policy and Internal Revenue Service requirements.

11.2 Each Party shall cooperate with the other to maintain the other Party's tax status. Nothing in this Agreement is intended to adversely affect the Transmission Provider's tax exempt status with respect to the issuance of bonds including, but not limited to, local furnishing bonds.

Article 12. Miscellaneous

12.1 Governing Law, Regulatory Authority, and Rules

The validity, interpretation and enforcement of this Agreement and each of its provisions shall be governed by the laws of the state of _____ (where the Point of Interconnection is located), without regard to its conflicts of law principles. This Agreement is subject to all Applicable Laws and Regulations. Each Party expressly reserves the right to seek changes in, appeal, or otherwise contest any laws, orders, or regulations of a Governmental Authority.

12.2 Amendment

The Parties may amend this Agreement by a written instrument duly executed by both Parties or under article 12.12 of this Agreement.

12.3 No Third-Party Beneficiaries

This Agreement is not intended to and does not create rights, remedies, or benefits of any character whatsoever in favor of any persons, corporations, associations, or entities other than the Parties, and the obligations herein assumed are solely for the use and benefit of the Parties, their successors in interest and where permitted, their assigns.

12.4 Waiver

12.4.1 The failure of a Party to this Agreement to insist, on any occasion, upon strict performance of any provision of this Agreement will not be considered a waiver of any obligation, right, or duty of, or imposed upon, such Party.

12.4.2 Any waiver at any time by either Party of its rights with respect to this Agreement shall not be deemed a continuing waiver or a waiver with respect to any other failure to comply with any other obligation, right, duty of this Agreement. Termination or default of this Agreement for any reason by Interconnection Customer shall not constitute a waiver of the Interconnection Customer's legal rights to obtain an interconnection from the Transmission Provider. Any waiver of this Agreement shall, if requested, be provided in writing.

12.5 Entire Agreement

This Agreement, including all Attachments, constitutes the entire agreement between the Parties with reference to the subject matter hereof, and supersedes all prior and contemporaneous understandings or agreements, oral or written, between the Parties with respect to the subject matter of this Agreement. There are no other agreements, representations, warranties, or covenants which constitute any part of the consideration for, or any condition to, either Party's compliance with its obligations under this Agreement.

12.6 Multiple Counterparts

This Agreement may be executed in two or more counterparts, each of which is deemed an original but all constitute one and the same instrument.

12.7 No Partnership

This Agreement shall not be interpreted or construed to create an association, joint venture, agency relationship, or partnership between the Parties or to impose any partnership obligation or partnership liability upon either Party. Neither Party shall have any right, power or authority to enter into any agreement or undertaking for, or act on behalf of, or to act as or be an agent or representative of, or to otherwise bind, the other Party.

12.8 Severability

If any provision or portion of this Agreement shall for any reason be held or adjudged to be invalid or illegal or unenforceable by any court of competent jurisdiction or other Governmental Authority, (1) such portion or provision shall be deemed separate and independent, (2) the Parties shall negotiate in good faith to restore insofar as practicable the benefits to each Party that were affected by such ruling, and (3) the remainder of this Agreement shall remain in full force and effect.

12.9 Security Arrangements

Infrastructure security of electric system equipment and operations and control hardware and software is essential to ensure day-to-day reliability and operational security. FERC expects all Transmission Providers, market participants, and Interconnection Customers interconnected to electric systems to comply with the recommendations offered by the President's Critical Infrastructure Protection Board and, eventually, best practice recommendations from the electric reliability authority. All public utilities are expected to meet basic standards for system infrastructure and operational security, including physical, operational, and cyber-security practices.

12.10 Environmental Releases

Each Party shall notify the other Party, first orally and then in writing, of the release of any hazardous substances, any asbestos or lead abatement activities, or any type of remediation activities related to the Small Generating Facility or the Interconnection Facilities, each of which may reasonably be expected to affect the other Party. The notifying Party shall (1) provide the notice as soon as practicable, provided such Party makes a good faith effort to provide the notice no later than 24 hours after such Party becomes aware of the occurrence, and (2) promptly furnish to the other Party copies of any publicly available reports filed with any governmental authorities addressing such events.

12.11 Subcontractors

Nothing in this Agreement shall prevent a Party from utilizing the services of any subcontractor as it deems appropriate to perform its obligations under this Agreement; provided, however, that each Party shall require its subcontractors to comply with all applicable terms and conditions of this Agreement in providing such services and each Party shall remain primarily liable to the other Party for the performance of such subcontractor.

12.11.1 The creation of any subcontract relationship shall not relieve the hiring Party of any of its obligations under this Agreement. The hiring Party shall be fully responsible to the other Party for the acts or omissions of any subcontractor the hiring Party hires as if no subcontract had been made; provided, however, that in no event shall the Transmission Provider be liable for the actions or inactions of the Interconnection Customer or its subcontractors with respect to obligations of the Interconnection Customer under this Agreement. Any applicable obligation imposed by this Agreement upon the hiring Party shall be

equally binding upon, and shall be construed as having application to, any subcontractor of such Party.

12.11.2 The obligations under this article will not be limited in any way by any limitation of subcontractor's insurance.

12.12 Reservation of Rights

The Transmission Provider shall have the right to make a unilateral filing with FERC to modify this Agreement with respect to any rates, terms and conditions, charges, classifications of service, rule or regulation under section 205 or any other applicable provision of the Federal Power Act and FERC's rules and regulations thereunder, and the Interconnection Customer shall have the right to make a unilateral filing with FERC to modify this Agreement under any applicable provision of the Federal Power Act and FERC's rules and regulations; provided that each Party shall have the right to protest any such filing by the other Party and to participate fully in any proceeding before FERC in which such modifications may be considered. Nothing in this Agreement shall limit the rights of the Parties or of FERC under sections 205 or 206 of the Federal Power Act and FERC's rules and regulations, except to the extent that the Parties otherwise agree as provided herein.

Article 13. Notices

13.1 General

Unless otherwise provided in this Agreement, any written notice, demand, or request required or authorized in connection with this Agreement ("Notice") shall be deemed properly given if delivered in person, delivered by recognized national currier service, or sent by first class mail, postage prepaid, to the person specified below:

If to the Interconnection Customer:

Interconnection Customer: _____

Attention: _____

Address: _____

City: _____ State:_____ Zip:_____

Phone: _____ Fax: _____

If to the Transmission Provider:

Transmission Provider: _____

Attention: _____

Address: _____

City: _____ State:_____ Zip:_____

Phone: _____ Fax: _____

13.2 Billing and Payment

Billings and payments shall be sent to the addresses set out below:

Interconnection Customer: _____

Attention: _____

Address: _____

City: _____ State: _____ Zip:_____

Transmission Provider: _____

Attention: _____

Address: _____

City: _____ State:_____ Zip:_____

13.3 Alternative Forms of Notice

Any notice or request required or permitted to be given by either Party to the other and not required by this Agreement to be given in writing may be so given by telephone, facsimile or e-mail to the telephone numbers and e-mail addresses set out below:

If to the Interconnection Customer:

Interconnection Customer: _____

Attention: _____

Address: _____

City: _____ State:_____ Zip:_____

Phone: _____ Fax: _____

If to the Transmission Provider:

Transmission Provider: _____

Attention: _____

Address: _____

City: _____ State:_____ Zip:_____

Phone: _____ Fax: _____

13.4 Designated Operating Representative

The Parties may also designate operating representatives to conduct the communications which may be necessary or convenient for the administration of this Agreement. This person will also serve as the point of contact with respect to operations and maintenance of the Party's facilities.

Interconnection Customer's Operating Representative:

Interconnection Customer: _____

Attention: _____

Address: _____

City: _____ State:_____Zip:_____

Phone: _____ Fax: _____

Transmission Provider's Operating Representative:

Transmission Provider: _____

Attention: _____

Address: _____

City: _____ State:_____ Zip:_____

Phone: _____ Fax: _____

13.5 Changes to the Notice Information

Either Party may change this information by giving five Business Days written notice prior to the effective date of the change.

Article 14. Signatures

IN WITNESS WHEREOF, the Parties have caused this Agreement to be executed by their respective duly authorized representatives.

For the Transmission Provider

Name: _____

Title: _____

Date: _____

For the Interconnection Customer

Name: _____

Title: _____

Date: _____

Attachment 1

Glossary of Terms

Affected System - An electric system other than the Transmission Provider's Transmission System that may be affected by the proposed interconnection.

Applicable Laws and Regulations - All duly promulgated applicable federal, state and local laws, regulations, rules, ordinances, codes, decrees, judgments, directives, or judicial or administrative orders, permits and other duly authorized actions of any Governmental Authority.

Business Day - Monday through Friday, excluding Federal Holidays.

Default - The failure of a breaching Party to cure its breach under the Small Generator Interconnection Agreement.

Distribution System - The Transmission Provider's facilities and equipment used to transmit electricity to ultimate usage points such as homes and industries directly from nearby generators or from interchanges with higher voltage transmission networks which transport bulk power over longer distances. The voltage levels at which Distribution Systems operate differ among areas.

Distribution Upgrades - The additions, modifications, and upgrades to the Transmission Provider's Distribution System at or beyond the Point of Interconnection to facilitate interconnection of the Small Generating Facility and render the transmission service necessary to effect the Interconnection Customer's wholesale sale of electricity in interstate commerce. Distribution Upgrades do not include Interconnection Facilities.

Good Utility Practice - Any of the practices, methods and acts engaged in or approved by a significant portion of the electric industry during the relevant time period, or any of the practices, methods and acts which, in the exercise of reasonable judgment in light of the facts known at the time the decision was made, could have been expected to accomplish the desired result at a reasonable cost consistent with good business practices, reliability, safety and expedition. Good Utility Practice is not intended to be limited to the optimum practice, method, or act to the exclusion of all others, but rather to be acceptable practices, methods, or acts generally accepted in the region.

Governmental Authority - Any federal, state, local or other governmental regulatory or administrative agency, court, commission, department, board, or other governmental subdivision, legislature, rulemaking board, tribunal, or other governmental authority having jurisdiction over the Parties, their respective facilities, or the respective services they provide, and exercising or entitled to exercise any administrative, executive, police, or taxing authority or power; provided, however, that such term does not include the Interconnection Customer, the Interconnection Provider, or any Affiliate thereof.

Interconnection Customer - Any entity, including the Transmission Provider, the Transmission Owner or any of the affiliates or subsidiaries of either, that proposes to interconnect its Small Generating Facility with the Transmission Provider's Transmission System.

Interconnection Facilities - The Transmission Provider's Interconnection Facilities and the Interconnection Customer's Interconnection Facilities. Collectively, Interconnection Facilities include all facilities and equipment between the Small Generating Facility and the Point of Interconnection, including any modification, additions or upgrades that are necessary to physically and electrically interconnect the Small Generating Facility to the Transmission Provider's Transmission System. Interconnection Facilities are sole use facilities and shall not include Distribution Upgrades or Network Upgrades.

Interconnection Request - The Interconnection Customer's request, in accordance with the Tariff, to interconnect a new Small Generating Facility, or to increase the capacity of, or make a Material Modification to the operating characteristics of, an existing Small Generating Facility that is interconnected with the Transmission Provider's Transmission System.

Material Modification - A modification that has a material impact on the cost or timing of any Interconnection Request with a later queue priority date.

Network Upgrades - Additions, modifications, and upgrades to the Transmission Provider's Transmission System required at or beyond the point at which the Small Generating Facility interconnects with the Transmission Provider's Transmission System to accommodate the interconnection of the Small Generating Facility with the Transmission Provider's Transmission System. Network Upgrades do not include Distribution Upgrades.

Operating Requirements - Any operating and technical requirements that may be applicable due to Regional Transmission Organization, Independent System Operator, control area, or the Transmission Provider's requirements, including those set forth in the Small Generator Interconnection Agreement.

Party or Parties - The Transmission Provider, Transmission Owner, Interconnection Customer or any combination of the above.

Point of Interconnection - The point where the Interconnection Facilities connect with the Transmission Provider's Transmission System.

Reasonable Efforts - With respect to an action required to be attempted or taken by a Party under the Small Generator Interconnection Agreement, efforts that are timely and consistent with Good Utility Practice and are otherwise substantially equivalent to those a Party would use to protect its own interests.

Small Generating Facility - The Interconnection Customer's device for the production and/or storage for later injection of electricity identified in the Interconnection Request, but shall not include the Interconnection Customer's Interconnection Facilities.

Tariff - The Transmission Provider or Affected System's Tariff through which open access transmission service and Interconnection Service are offered, as filed with the FERC, and as amended or supplemented from time to time, or any successor tariff.

Transmission Owner - The entity that owns, leases or otherwise possesses an interest in the portion of the Transmission System at the Point of Interconnection and may be a Party to the Small Generator Interconnection Agreement to the extent necessary.

Transmission Provider - The public utility (or its designated agent) that owns, controls, or operates transmission or distribution facilities used for the transmission of electricity in interstate commerce and provides transmission service under the Tariff. The term Transmission Provider should be read to include the Transmission Owner when the Transmission Owner is separate from the Transmission Provider.

Transmission System - The facilities owned, controlled or operated by the Transmission Provider or the Transmission Owner that are used to provide transmission service under the Tariff.

Upgrades - The required additions and modifications to the Transmission Provider's Transmission System at or beyond the Point of Interconnection. Upgrades may be Network Upgrades or Distribution Upgrades. Upgrades do not include Interconnection Facilities.

Attachment 2

Description and Costs of the Small Generating Facility, Interconnection Facilities, and Metering Equipment

Equipment, including the Small Generating Facility, Interconnection Facilities, and metering equipment shall be itemized and identified as being owned by the Interconnection Customer, the Transmission Provider, or the Transmission Owner. The Transmission Provider will provide a best estimate itemized cost, including overheads, of its Interconnection Facilities and metering equipment, and a best estimate itemized cost of the annual operation and maintenance expenses associated with its Interconnection Facilities and metering equipment.

Attachment 3

One-line Diagram Depicting the Small Generating Facility, Interconnection Facilities, Metering Equipment, and Upgrades

Attachment 4

Milestones

In-Service Date: _____

Critical milestones and responsibility as agreed to by the Parties:

	Milestone/Date	**Responsible Party**
(1)	_____	_____
(2)	_____	_____
(3)	_____	_____
(4)	_____	_____
(5)	_____	_____
(6)	_____	_____
(7)	_____	_____
(8)	_____	_____
(9)	_____	_____
(10)	_____	_____

Agreed to by:

For the Transmission Provider_____ Date_____

For the Transmission Owner (If Applicable) _____ Date_____

For the Interconnection Customer_____ Date_____

Attachment 5

Additional Operating Requirements for the Transmission Provider's Transmission System and Affected Systems Needed to Support the Interconnection Customer's Needs

The Transmission Provider shall also provide requirements that must be met by the Interconnection Customer prior to initiating parallel operation with the Transmission Provider's Transmission System.

Attachment 6

Transmission Provider's Description of its Upgrades and Best Estimate of Upgrade Costs

The Transmission Provider shall describe Upgrades and provide an itemized best estimate of the cost, including overheads, of the Upgrades and annual operation and maintenance expenses associated with such Upgrades. The Transmission Provider shall functionalize Upgrade costs and annual expenses as either transmission or distribution related.

ATTACHMENT N-1

TRANSMISSION PLANNING PROCESS
(DEP Zone and DEC Zone)

1. INTRODUCTION

Duke Energy Carolinas, LLC (DEC) and Duke Energy Progress, LLC (DEP) (sometimes referred to individually as Company and collectively Companies), entities with transmission facilities located in the states of North Carolina and South Carolina, ensure that their entire Transmission Systems (i.e., both the portions located in North Carolina and the portions located in South Carolina) are planned in accordance with the local transmission planning requirements imposed by Order Nos. 890 and 1000 through the process developed and implemented by the Carolinas Transmission Planning Collaborative (CTPC Process or Local Planning Process). The Carolinas Transmission Planning Collaborative includes load serving entities (LSE) in the States of North Carolina and South Carolina (collectively, CTPC Participants or Participants) within the DEC and DEP footprint.

The Companies ensure that their Transmission Systems are planned in accordance with the regional planning requirements imposed by Order No. 1000 through participation in the Southeastern Regional Transmission Planning Process (SERTP or SERTP Process).

In addition to engaging in local transmission planning through the CTPC Process and regional transmission planning through the SERTP Process, the Companies engage in additional coordination activities with transmission providers located inside and outside their region, as discussed in Section 11. Such activities include participation in SERC Reliability Corporation (SERC), which focuses on reliability assessments. The SERTP engages in interregional coordination as described in Attachment N-1 – FRCC, Attachment N-1 – MISO, Attachment N-1 – PJM, Attachment N-1 – SCRTP, and Attachment N-1 – SPP.

Unless noted otherwise, Section references in this Attachment N-1 refer to Sections within this Attachment N-1.

For purposes of computation of time, all references in this document shall be calendar days. If any of the deadlines set forth in this document should fall on a weekend or holiday recognized by FERC, then the deadline shall fall on the next business day.

PART I -- LOCAL PLANNING PROCESS

2. CTPC PROCESS OVERVIEW INCLUDING THE PROCESS FOR CONSULTING WITH TAG PARTICIPANTS

The CTPC shall annually develop a single, coordinated local transmission plan (Local Transmission Plan) that appropriately balances costs, benefits, and risks associated with the use of transmission, generation, and demand-side resources to meet the needs of LSEs as well as Transmission Customers under this Tariff.

2.1 The Carolinas Transmission Planning Collaborative Participation Agreement (Participation Agreement) governs the participation in the

CTPC and the CTPC Process. The Participation Agreement is located on the CTPC's Website (http://www.nctpc.org/nctpc/).

2.2 The CTPC Process is summarized in a document entitled *Carolinas Transmission Planning Collaborative Process* that is located on the CTPC's Website.

2.3 Participation in the CTPC

2.3.1 Pursuant to the *Participation Agreement*, the CTPC has three components: the Oversight/Steering Committee (OSC), the Planning Working Group (PWG), and the Transmission Advisory Group (TAG).

2.3.2 Eligibility for participation in the three CTPC components is as follows:

2.3.2.1 The appointment of OSC members by the CTPC Participants is governed by the *Participation Agreement*. The qualifications required to serve on the OSC are set forth in a document entitled *Scope - Oversight/Steering Committee* that is located on the CTPC's Website.

2.3.2.2 The appointment of PWG members by the CTPC Participants is governed by the *Participation Agreement*. The qualifications required to serve on the PWG are set forth in a document entitled *Scope - Planning Working Group* that is located on the CTPC's Website.

2.3.2.3 Anyone may participate in TAG meetings and sign-up to receive TAG communications. The TAG is comprised of TAG participants. An employee or agent of a CTPC Participant who 1) performs or supervises transmission planning activities or 2) is a member of the OSC or PWG may not be a TAG participant, but employees or agents of CTPC Participants that perform activities other than transmission planning activities may be TAG participants.

2.4 Responsibilities and Decision-Making of CTPC Components

The responsibilities of the components within the CTPC are determined by the *Participation Agreement* and/or the OSC. Decision-making likewise is established in the *Participation Agreement*, or by policies established by the OSC.

2.4.1 Oversight/Steering Committee

2.4.1.1 The OSC is responsible for overseeing and directing all the activities associated with this CTPC Process. A list of the OSC's responsibilities is found in *Scope - Oversight/Steering Committee.*

2.4.1.2 OSC decision-making is governed by the *Participation*

Agreement.

2.4.1.3 Officers of the OSC are selected in the manner set forth in the *Participation Agreement.*

2.4.1.4 The OSC is responsible for selecting an Administrator in the manner set forth in the *Participation Agreement.* The Administrator shall act as a facilitator for the OSC and TAG and shall assist the chair and vice-chair in the performance of their duties as reasonably requested.

2.4.2 Planning Working Group

2.4.2.1 The PWG is responsible for developing and performing the appropriate simulation studies to evaluate the transmission conditions in the Participants' service territories and recommend a coordinated solution for the various transmission limitations identified in the studies. A list of the PWG's responsibilities is found in *Scope - Planning Working Group.*

2.4.2.2 PWG decision-making is governed by the *Participation Agreement.*

2.4.2.3 Officers of the PWG are selected in the manner set forth in the *Participation Agreement.*

2.4.3 Transmission Advisory Group

2.4.3.1 The purpose of the TAG is to provide advice and recommendations to the CTPC Participants to aid in the development of an annual Local Transmission Plan. Opportunities for input from TAG participants are detailed in Sections 4 and 5 hereof. A full list of the TAG's responsibilities is found in *Scope - Transmission Advisory Group,* which is located on the CTPC's Website.

2.4.3.2 The OSC chair will chair the TAG meetings. The Administrator will serve as the facilitator for the TAG meetings. TAG decision-making is by consensus among the TAG participants. However, in the event consensus cannot be reached, voting will be conducted through the TAG Sector Voting Process. The Administrator will provide notice to the TAG participants in advance of the TAG meeting that specific votes will be taken during the TAG meeting.

2.4.3.3 Only TAG participants attending the meeting (in person or by telephone, electronic or other communication facilities that permit all participants to communicate with each other during the meeting) will be allowed to participate in the TAG Sector Voting Process. No voting by proxy is permitted.

2.4.4 TAG Sector Voting Process.

2.4.4.1 In order for a TAG participant to participate in the TAG Sector Voting Process, the TAG participant must have registered with the Companies at least two weeks prior to the first meeting at which the TAG participant intends to vote. Such web-based registration will require the TAG participant to provide the following information to the Companies: name, home or business address, place of employment (if any), email address (if any), and telephone number. The registration form will require the TAG participant to indicate whether the TAG participant is registering as an "Individual" or as an agent or employee of a "TAG Sector Entity." If the TAG participant registers as an agent, member, or employee of a TAG Sector Entity, s/he must identify such TAG Sector Entity. An individual TAG participant may register as an agent, member, or employee of more than one TAG Sector Entity.

2.4.4.2 A TAG Sector Entity may be any organized group (e.g., corporation, partnership, association, trust, agency, government body, etc.) but cannot be an individual person. A TAG Sector Entity may be a member of only one TAG Sector. A TAG Sector Entity and its affiliates or member organizations all may register as separate TAG Sector Entities, as long as such affiliates or member organizations meet the definition of a TAG Sector Entity.

2.4.4.3 A TAG Sector Entity should elect to be a member of one of the following TAG Sectors: Cooperative LSEs that serve load in the CTPC footprint; Municipal LSEs that serve load in the CTPC footprint; Investor-Owned LSEs that serve load in the CTPC footprint; Transmission Providers/Transmission Owners that are not LSEs in the CTPC footprint; Transmission Customers a customer taking Transmission Service from at least one Company in the CTPC; Generator Interconnection Customers (a customer taking FERC- or state- jurisdictional generator interconnection service from at least one of the Companies in the CTPC); Eligible Customers and Ancillary Service Providers (includes developers, ancillary service providers, power marketers not currently taking transmission service, and demand response providers); and General Public. An Individual is only eligible to join the General Public Sector.

2.4.4.4 Only one individual TAG participant that has registered as an agent or employee of a TAG Sector Entity may vote on behalf of a particular TAG Sector Entity with regard to any particular vote. An individual TAG participant may vote on behalf of more than one TAG Sector Entity, if authorized to do so. Questions to be voted on will be answerable with a Yes or No.

2.4.4.5 If a vote is to be taken, each TAG Sector that has at least one TAG Sector Entity representative, or at least one Individual or TAG Sector Entity representative in the case of the General Public Sector, present will receive a Sector Vote with a worth of 1.00. A Sector Vote is divisible. The vote of each TAG participant eligible to vote in a Sector Vote is not divisible. The vote of each TAG participant in a TAG Sector will be multiplied by 1.00 divided by the total number of TAG participants voting in such Sector to determine how the Sector Vote with a total worth of 1.00 will be allocated between "Sector Yes Votes" and "Sector No Votes." That is, each Sector Vote will be allocated such that the Sector Yes Vote(s) and Sector No Vote(s) totals 1.00. The Sector Yes Vote and Sector No Vote for each TAG Sector will then each be weighted by multiplying each of them by 1.00 divided by the number of TAG Sectors participating in the relevant vote. The results will be called "Weighted Sector Yes Vote" and "Weighted Sector No Vote." The winning position will be the larger of the Weighted Sector Yes Vote and Weighted Sector No Vote. Appendix 3 contains an example of the voting process.

2.5 Participation of State Regulators

State regulators, including state-sanctioned entities representing the public, like other members of the public, may choose to be TAG participants. If they choose to be a TAG participant, state public utility regulatory commissions would be TAG Sector Entities in the General Public Sector. State public utility regulatory commissions also may seek to receive periodic status updates and the progress reports on the CTPC Process.

3. NOTICE PROCEDURES, MEETINGS, AND PLANNING-RELATED COMMUNICATIONS

All information regarding local transmission planning meetings and communications are located on the CTPC Website.

3.1 Notice

3.1.1 Notice of all meetings of a component (TAG, PWG, OSC) will be by email to such component. All TAG meeting notices and agendas will be posted on the CTPC website.

3.1.2 Information about signing up to be a TAG participant and to receive email communications will be posted on the CTPC Website.

3.1.3 The OSC will publish highlights of its meetings on the CTPC website.

3.2 Location

3.2.1 The location of an OSC or PWG meeting will be determined by the component.

3.2.2 The location of a TAG meeting will be determined by the OSC.

3.2.3 Conference call dial-in or other web-based technology will be available for meetings upon request.

3.3 Meeting Protocols

3.3.1 OSC

3.3.1.1 The OSC chair schedules meetings, provides notice, ensures that meeting minutes are taken, develops the agenda, and chairs the meetings.

3.3.1.2 The OSC generally will meet at least monthly, and more frequently as necessary.

3.3.1.3 OSC meetings are open to the OSC members, their alternates, PWG members, and, if approved, guests. Guests will be approved in accordance with the Scope of the OSC document as posted to the CTPC website.

3.3.2 PWG

3.3.2.1 The PWG chair schedules meetings, provides notice, ensures that meeting minutes are taken, develops the agenda, and chairs the meetings.

3.3.2.2 The PWG generally meets at least monthly, and more frequently as necessary.

3.3.2.3 PWG meetings are open to the PWG members, the OSC and their alternatives, and, if approved, guests. Guests will be approved in accordance with the Scope of the PWG document as posted to the CTPC website.

3.3.3 TAG

3.3.3.1 TAG meetings are chaired by the OSC chair and facilitated by the Administrator.

3.3.3.2 The TAG generally meets four times a year in accordance with the procedures set forth in Section 5.

3.3.3.3 Meetings of the TAG generally are open to the public, i.e., TAG participants. When necessary, TAG meetings may be restricted to TAG participants that are qualified to receive Confidential Information. TAG Participants are free to use information from the TAG meeting discussion, but are not permitted to attribute any particular discussion comment(s) to a specific CTPC or TAG Participant.

3.3.3.4 A yearly meeting and activity schedule is proposed, discussed

with, and provided to TAG participants annually. Additional TAG meetings may be scheduled on an as needed basis, in conformity with Section 5.

3.3.3.5 Any submissions by TAG participants to the PWG, OSC, or CTPC Participants pursuant to the procedures in Section 5 will be deemed public and will be posted on the CTPC Website for other TAG participants. However, TAG participants may designate all or part of its submission as confidential information, pursuant to Section 9.2. Additionally, for all public postings of submissions by TAG participants, the identity of the TAG participant who made the submission will be treated as confidential information and will be posted publicly only by consent of the TAG participant upon submission.

4. DESCRIPTION OF THE LOCAL PLANNING PROCESS

The CTPC Process is a coordinated local transmission planning process. The entire iterative process ultimately results in a single Local Transmission Plan that appropriately balances the costs, benefits and risks associated with the use of transmission, generation, and demand-side resources. The Local Transmission Plan will identify local transmission projects (Local Projects). A Local Project is defined as a transmission facility that (1) is located solely within the footprint of the DEC or DEP Transmission Systems, (2) is not selected in the regional transmission plan for purposes of regional cost allocation; (3) is either an expansion or enhancement to the DEC or DEP Transmission System; and (4) is not a project to maintain, repair, or replace existing transmission facilities in order to maintain a safe, reliable, and compliant grid, even if such project results in an incidental increase in transmission capacity that is not reasonably severable from work to maintain, repair, or replace the existing transmission facility.

4.1 Overview of Local Planning Process

As described in Sections 4.2 through 4.5, the Local Planning Process performs studies to identify:

(i) Local Projects that are necessary to preserve reliability and comply with applicable reliability standards ("Local Reliability Projects");
(ii) Local Projects that will increase transmission access to potential supply resources inside and outside the Control Areas of the Companies based on Participant or TAG participant requested economic studies ("Local Economic Projects");
(iii) Local Projects to satisfy Public Policy Requirements ("Public Policy Projects"); and/or
(iv) Local Projects that will integrate new generation resources and/or loads and provide other benefits in a least-cost manner ("Multi-Value Strategic Transmission Projects").

The following are the general steps in the Local Planning Process

4.1.1 Each year, the OSC will initiate the process to develop the annual Local Transmission Plan through the study processes defined herein.

4.1.2 The OSC will provide notice of the commencement of the process to develop the annual Local Transmission Plan via e-mail to the TAG and posts a notice on the CTPC website.

4.1.3 The process will allow for flexibility to make modifications to the Local Transmission Plan throughout the year as needs change, new needs arise, or new solutions to problems are identified.

4.1.4 The schedule for all of the activities will be set by the PWG and OSC, but will vary from year to year. The basic order of events is as set forth in Section 5, although the planning process for each type of Local Project is an iterative one. A list of relevant dates established for the planning cycle will be posted on the CTPC website.

4.1.5 At the approximate mid-point of the annual Local Transmission Planning process, but no later than August 15 of each year, the Companies will provide a written report on the status of the Local Projects presented in the previous Local Transmission Plan (the "Mid-Year Update Report"). The Mid-Year Update Report will be posted on the CTPC website and will include the following information: the name of the project, the detailed issue it resolves, the name of the relevant Company(s), the original planned in-service date and the current expected in-service date, an explanation of the reasons for any change, the scope of the project, and updated cost estimates for the Local Projects. Prior to OSC approval, the Mid-Year Update Report will be reviewed at a TAG meeting scheduled at the approximate mid-point of the annual planning process. The Mid-Year Update Report may include new Local Projects added since the previous annual Local Transmission Plan to address an emergent need, as long as the emergent need has been presented to TAG participants for review and comment prior to the OSC's approval of the Mid-Year Update Report.

4.2 Overview of Study Process for Local Reliability Projects

4.2.1 The Local Planning Process starts with a base reliability study (Base Case) that evaluates each Transmission System's ability to meet projected load with a defined set of resources for network transmission customers as well as the needs of firm point-to-point customers, whose needs are reflected in their transmission contracts and reservations.

4.2.2 In order to ensure comparability and consistency with the Data Collection requirements in Section 5:

4.2.2.1 Customers taking Network Transmission Service are expected to accurately reflect in their annual load forecast projections: (i) demand response resources, including but not limited, to any activities by load-serving entities to reduce, interrupt, or otherwise manage end-use customer load through the use of

centralized control and/or by supplying load signal information, real-time pricing signals, or specific instruction; (ii) energy efficiency; and (iii) distributed energy resources, which is a kW/MW resource that nets with customer demand if behind the meter and must be specified separately.

4.2.2.2 Eligible Customers and Transmission Customers (a) providing information about current and potential needs for Point-to-Point Transmission Service and (b) when submitting their request for Point-to-Point Transmission Service are expected to accurately reflect: (i) demand response resources, including but not limited, to any activities by load-serving entities to reduce, interrupt, or otherwise manage end-use customer load through the use of centralized control and/or by supplying load signal information, real-time pricing signals, or specific instruction; (ii) energy efficiency; and (iii) distributed energy resources, which is a kW/MW resource that nets with customer demand if behind the meter and must be specified separately.

4.2.2.3 To the extent a TAG participant has a demand response resource, a generation resource, and/or any other reasonable combination of alternative resources and/or technology solutions ("Alternate Proposal") that the TAG participant desires the CTPC to specifically consider as an alternative to transmission expansion, or otherwise in conjunction with the CTPC Process, such TAG participant sponsoring such Alternate Proposal shall provide within 14 calendar days of the Needs Meeting the necessary information (cost, performance, lead time to install, etc.) in order for the CTPC to consider such Alternate Proposal comparably with other alternatives.

4.3 Overview of Study Process for Local Economic Projects

4.3.1 The Local Economic Study Process is the process that allows the TAG participants to propose economic upgrades to be studied as part of the Local Planning Process. The Local Economic Study Process evaluates the means to increase transmission access to potential supply resources inside and outside the Control Areas of the Companies. This economic analysis provides the opportunity to study what transmission upgrades would be required to reliably integrate new resources.

4.3.2 The Local Economic Study Process begins with the TAG participants proposing scenarios and interfaces to be studied at least 30 calendar days prior to the Assumptions Meeting described in Section 5.1.3. The information required and the form necessary to submit a request as well as the submittal deadline is reviewed and discussed with the TAG participants early in the annual planning cycle. The form is posted on the CTPC Website. The PWG will determine if it would be efficient to combine and/or cluster any of the proposed scenarios and will also determine if any of the proposed scenarios are of a regional nature. The OSC will direct the TAG participants to submit any regional study

requests to the SERTP. Throughout the Local Economic Study Process, TAG participants (including TAG participants representing transmission solutions, generation solutions, and solutions utilizing demand resources) may participate.

4.3.2.1 The OSC will review the PWG analysis, approve the compiled study list, and provide the study list, including study criteria, assumptions, and methodology to the TAG in accordance with the procedures set forth in Section 5.1.3 for the Assumptions Meeting(s) applicable to the Local Economic Project Study Process. For the study scenarios that impact the CTPC footprint, but are not Regional in nature, the TAG participants will select within 14 calendar days of the Assumptions Meeting a maximum of three scenarios that will be studied within a single CTPC planning cycle. If consensus cannot be reached as to which scenarios to study within 14 calendar days of the Assumptions Meeting, the choice will be resolved through the TAG Sector Voting Process. The TAG participants may request that the maximum of the three scenarios be combined or clustered.

4.3.2.2 There will be no charge to the TAG participants for the three studies selected by the TAG participants. However, if a particular TAG participant wants the CTPC to evaluate a scenario that was not chosen by the TAG participants, then the TAG participant can request to have the CTPC conduct the study. The CTPC Participants will evaluate this request and will conduct the study if the study can be reasonably accommodated, however the cost of conducting this additional study will be allocated to that specific TAG participant.

4.3.2.3 The final results of the Local Economic Study Process include the estimated costs and schedules to provide the increased transmission capabilities. The Local Economic Study Process results are reviewed and discussed with the TAG participants in accordance with the procedures set forth in Section 5.4.2 for the Solutions Meeting(s) applicable to the Local Economic Project Study Process.

4.3.2.4 Only Local Economic Projects approved pursuant to Section 5.6 are included in the Local Transmission Plan.

4.4 Overview of Study Process for Public Policy Projects.

4.4.1 Each year, the OSC will determine if there are any public policies driving the need for local transmission.

4.4.2 Criteria for determining if public policy drives local transmission need.

4.4.2.1 Public policy must be reflected in state, federal, or local law or regulation (including order of a state, federal, or local agency).

4.4.2.2 At least 30 calendar days prior to the Assumptions Meeting described in Section 5.1.3 the OSC will seek input (e.g. written comments) from TAG participants, asking that they (i) identify any public policies that are driving the need for local transmission, pursuant to the criteria below, and (ii) propose study criteria, assumptions, and methodology to evaluate the need for local transmission driven by the identified public policy ("Public Policy Study Proposal").

4.4.2.3 The OSC may itself identify a Public Policy Study Proposal.

4.4.2.4 Public Policy Study Proposals will be reviewed in accordance with Section 5.1.

4.4.3 Within two weeks following the Assumptions Meeting, the OSC will post on the CTPC website an explanation of (1) those local transmission needs driven by Public Policy Requirements that have been identified for evaluation for potential transmission projects in the then-current planning cycle; and (2) the reason(s) why other suggested, possible transmission needs driven by Public Policy Requirements proposed by the TAG participants or the OSC were not selected for further evaluation. If one or more public policies are identified as driving local transmission needs, the Companies shall follow the procedures set forth in Section 5.3, and TAG participants may suggest projects to meet those needs in accordance with procedures set forth in Section 5.4. If no public policies are identified for the planning year, TAG participants will be unable to propose Public Policy Project solutions.

4.4.4 Only Public Policy Projects approved pursuant to Section 5.6 are included in the Local Transmission Plan.

4.5 Overview of Study Process for Multi-Value Strategic Transmission Projects

4.5.1 On at least a triennial basis, the study process for Multi-Value Strategic Transmission Projects allows the OSC and TAG participants to propose different scenarios for evaluation of new resource supply options, changing load dynamics, transmission solutions requiring longer lead times, generator retirements, and/or economic development opportunities ("Strategic Planning Scenarios"). Strategic Planning Scenarios may consider, but are not limited to considering, (1) federal and state laws and regulations that affect the future resource mix and demand; (2) federal and state laws and regulations that affect

decarbonization and electrification; (3) utility integrated resource plans approved pursuant to either N.C. G.S. § 62-110.1 or S.C. Code Ann. § 58-37-40 and long-term expected supply obligations for load serving entities; (4) trends in technology and fuel costs within and outside of the electricity supply industry, including shifts toward electrification of buildings and transportation; (5) resource retirements and replacements or expiration of power purchase agreements; (6) generator interconnection requests and withdrawals, and/or (7) the need for transmission during high-impact, low frequency events. At the beginning of each annual planning cycle, the PWG will recommend to the OSC and the OSC will decide whether or not to initiate a Multi-Value Strategic Transmission Project Study process more frequently than according to the minimum triennial basis.

4.5.2 At least 30 calendar days prior to the Assumptions Meeting described in Section 5.1.3, the OSC will seek input from TAG participants on Strategic Planning Scenarios to evaluate. The form to propose a Strategic Planning Scenario is posted on the CTPC Website. Proposed Strategic Planning Scenarios must specifically identify models, assumptions, and data proposed to be used in the study process. Proposed Strategic Planning Scenarios must also identify an appropriate planning horizon for the proposed scenario(s) to be studied and may propose the benefit metrics to be considered.

4.5.3 The OSC may itself also identify Strategic Planning Scenarios to be presented at an Assumptions Meeting described in Section 5.1.3.

4.5.4 The PWG will determine if it would be efficient to combine and/or cluster any of the proposed Strategic Planning Scenarios and will also determine if any of the proposed Strategic Planning Scenarios are of a Regional nature. If the proposed Strategic Planning Scenario is regional in nature, the OSC will direct the TAG participants to submit the regional study requests to the SERTP.

4.5.5 The OSC will review the PWG analysis of the proposed Strategic Planning Scenarios to be studied, approve the compiled study list, and provide the study list, including study criteria, assumptions, and methodology to the TAG in accordance with the procedures set forth in Section 5.1.3 for the Assumptions Meeting(s) applicable to the Multi-Value Strategic Transmission Project Study Process. If there are more than three proposed Strategic Planning Scenarios proposed by TAG participants pursuant to Section 4.5.2 that impact the CTPC footprint, but are not Regional in nature presented at the Assumptions Meeting, the TAG participants will select within 14 calendar days of the Assumptions Meeting a maximum of three proposed Strategic Planning Scenarios that will be studied within a single CTPC planning cycle. If consensus cannot be reached as to which scenarios to study within 14 calendar days of the Assumptions Meeting, the choice will be resolved through the TAG Sector Voting Process. The TAG participants may request that the three scenarios be combined or clustered. A minimum

of three Strategic Planning Scenarios will be evaluated for each Multi-Value Strategic Transmission Project study process.

4.5.5.1 There will be no charge to the TAG participants for the three proposed Strategic Planning Scenarios studies selected by the TAG participants. However, if a particular TAG participant wants the CTPC to evaluate a scenario that was not chosen by the TAG participants, then the TAG participant can request to have the CTPC conduct the study. The CTPC Participants will evaluate this request and will conduct the study if the study can be reasonably accommodated, however the cost of conducting this additional study will be allocated to that specific TAG participant.

4.5.6 The final results of the Multi-Value Strategic Transmission Project Study Process will include the estimated costs and schedules to provide the increased transmission capabilities. The Multi-Value Strategic Transmission Project Study results are reviewed and discussed with the TAG participants in accordance with the procedures set forth in Section 5.4 for the Solutions Meeting(s) applicable to the Local Economic Project Study Process.

4.5.7 Only Multi-Value Strategic Transmission Projects approved pursuant to Section 5.6 are included in the Local Transmission Plan.

5. CRITERIA, ASSUMPTIONS, AND DATA UNDERLYING THE LOCAL TRANSMISSION PLAN AND METHOD OF DISCLOSURE OF LOCAL TRANSMISSION PLANS AND STUDIES

5.1 Identification of Study Criteria, Assumptions, and Methodology

5.1.1 The PWG establishes the reliability planning criteria by which the study results will be measured to identify Local Reliability Projects for inclusion in the Local Transmission Plan, in accordance with North American Electric Reliability Corporation (NERC) and SERC Reliability Standards and individual Company criteria.

5.1.2 Study criteria, assumptions, and methodology for Local Economic Projects, Public Policy Projects, and Multi-Value Strategic Transmission Projects will be identified in accordance with the Sections 4.3, 4.4, and 4.5, respectively. Inclusion of Local Economic Projects, Public Policy Projects, and Multi-Value Strategic Transmission Projects in the Local Transmission Plan is subject to the procedures and OSC approval required by Section 5.6.

5.1.3 The Companies shall schedule and facilitate a minimum of one TAG meeting to review the criteria, assumptions, and methodology the PWG plans to use to identify needs and transmission solutions to include in the Local Transmission Plan ("Assumptions Meeting"). The Assumptions Meeting shall take place prior to the OSC's approval of the final set of study assumptions. The Companies shall

provide the criteria, assumptions, and methodology to the Administrator for posting on the CTPC website at least 20 calendar days in advance of the Assumptions Meeting to provide TAG participants sufficient time to review this information. TAG participants may provide comments on the criteria, assumptions, and methodology to the PWG for consideration either prior to or following the Assumptions Meeting. The Companies shall review and consider comments that are received within 14 calendar days of the Assumptions Meeting and may respond or provide feedback as appropriate.

5.1.4 The final criteria, assumptions, and methodology, including but not limited to the applicable planning horizon, for studying Local Economic Projects, Public Policy Projects, and Multi-Value Strategic Transmission Projects shall be set forth in a *Study Scope Document* to be reviewed by the TAG and approved by the OSC and posted to the CTPC website.

5.1.5 Transmission System planning documents of DEC and DEP will be posted on their respective OASIS sites. Some planning documents may not be posted due to CEII and confidentiality concerns, but will be identified such that they can be requested via the methodology posted on the relevant OASIS.

5.2 Data Collection and Case Development

5.2.1 The Companies will prepare the Base Case models. The most current Multi-Regional Modeling Working Group (MMWG) or SERC Long-Term Study Group model will be used for the systems external to DEC and DEP as a starting point for the Base Case to be used by both DEP and DEC. The Base Case will include the detailed internal models for DEP and DEC and will include current transmission additions planned to be in-service for given years. TAG participants also may, upon request, review the Base Case models and provide input to the PWG with regard to whether the models represent the study assumptions approved by the OSC in accordance with the procedures set forth in Section 5.3.3 and during the Needs Meeting defined therein.

5.2.2 The Companies will also develop the necessary Change Case models as required to evaluate scenarios directed by the *Study Scope Document* for Local Reliability Projects, Local Economic Projects, Public Policy Projects, and Multi-Value Strategic Transmission Projects. Such Change Case models will also be reviewed with the PWG to ensure that they represent the study criteria, assumptions, and methodology approved by the OSC in the *Study Scope Document*. Upon request, TAG participants will be provided the Change Case models, subject to CEII and confidentiality requirements. For Local Economic Projects, Public Policy Projects, and Multi-Value Strategic Transmission Projects, TAG participants may provide input to the PWG with regard to whether the models accurately represent the *Study Scope Document* approved by

the OSC in accordance with the procedures set forth in Section 5.3.3 and during the Needs Meeting defined therein.

5.2.3 The following data are relevant to the development of internal models for the Companies:

Load and resource projections provided by network customers (including the native load of the CTPC Participants);

Confirmed, firm point-to-point transmission service reservations (including rollover rights);

Generation real and reactive capacity data;

Generation dispatch priority data;

Dispatch assumptions for variable energy resources and energy storage;

Transmission facility impedance and rating data;

Interchange data adjusted to correctly model transfers associated with designated network resources from outside the Companies' Control Areas;

Generation retirement;

Resource supply additions with locational information;

Import and export assumptions;

TRM and CRSG requirements; and

DER Aggregation modeling assumptions.

5.2.4 The Companies collect the necessary planning data and information that are not already in their possession. One element of this data collection process will be the annual collection of data from Network Customers, Eligible Customers, and Transmission Customers required by this Tariff. Any guidelines, data formats, and schedules for any data and information exchanges will be established by the PWG. Aside from the annual submission of data by Network Customers, the timing of this data collection process is established as part of the development of the annual study work plan that is prepared by the PWG, reviewed with the TAG participants at the Assumptions Meeting, approved by the OSC, and documented in the *Study Scope Document*. To the extent data is required from TAG participants to conduct the study processes for Local Economic Projects, Public Policy Projects, and/or Multi-Value Strategic Transmission Projects, TAG participants are obligated to provide such data to the Companies in accordance with the timelines documented in the *Study Scope Document.* Timelines for submission of data by TAG participants in the *Study Scope Document* set by the PWG shall be reasonable and may be amended if approved by the OSC. OSC approval

of requests to extend timelines for submission of data shall not be unreasonably withheld. If required data is not provided in accordance with the timelines approved in the *Study Scope Document* or as amended by approval of the PWG, and the failure to provide the data is not cured within 30 days of the due date, the CTPC Participants shall have no obligation to continue with the study during the current planning cycle.

5.2.5 Transmission Customers should provide the Companies with timely written notice of material changes in any information previously provided relating to load, resources, or other aspects of their facilities or operations affecting the Company's ability to provide service that affect the Base Case models. Network customers may provide revised versions of previously submitted annual data reporting forms.

5.3 Technical Analysis and Identification of Transmission Needs

5.3.1 The PWG performs the technical analysis in accordance with the OSC approved study criteria, assumptions, and methodology in the *Study Scope Document* and produces the study results.

5.3.2 Results from the technical analysis are reported to identify transmission elements approaching their limits such that all CTPC Participants are made aware of potential issues and appropriate steps can be identified to correct these issues, including the potential of identifying previously undetected problems.

5.3.3 The Companies shall schedule and facilitate a minimum of one TAG meeting per planning cycle to review the identified criteria violations, transmission elements approaching their limits, and resulting system needs, if any, that may drive the need for a Local Project (Needs Meeting). The Needs Meeting may be scheduled no fewer than 25 calendar days after the Assumptions Meeting. At the Needs Meeting, the Companies will review the identified system needs and the drivers of those needs, based on the application of its criteria, assumptions, and methodology in the *Study Scope Document*. The Companies shall share with the Administrator for posting to the CTPC website the identified criteria violations and drivers no fewer than 14 calendar days in advance of the Needs Meeting. TAG participants may provide comments on the criteria violations and drivers to the PWG for consideration prior to, at, or following the Needs Meeting. The Companies shall review and consider comments that are received within 14 calendar days of the Needs Meeting and may respond or provide feedback as appropriate.

5.3.4 Sufficient information will be made available, subject to CEII and confidentiality restrictions, to enable TAG participants to replicate the results of planning studies reviewed at the Needs Meeting. A TAG participant seeking data and information that would allow it to replicate the CTPC planning studies should provide such request to the Companies, who will verify that confidentiality requirements described in Section 9 have been met before providing such information.

5.4 Local Solution Development

5.4.1 The PWG identifies potential solutions to the transmission needs identified during the Needs Meeting and will test the effectiveness of the potential solutions through additional analysis as required and ensure that the solutions meet the study criteria previously developed.

5.4.2 No fewer than 25 calendar days after the Needs Meeting, the Companies shall schedule and facilitate a minimum of one TAG meeting per planning cycle to review potential solutions identified by the PWG pursuant to Section 5.4.1 ("Solutions Meeting").
The Companies shall share with the Administrator and post their potential solutions, as well as any alternatives, including non-wire alternatives, identified by the PWG or TAG participants, no fewer than 14 calendar days in advance of the Solutions Meeting. TAG participants may provide comments on the potential solutions to the PWG for consideration either prior to or following the Solutions Meeting, including but not limited to proposals for alternative transmission or non-wire alternative solutions to address the identified need, as well as other reliability, economic and/or public policy transmission needs. To the extent TAG participants propose alternative solutions, they shall provide to the PWG the necessary information (cost, performance, lead time to install, etc.) for the alternative solutions to be compared with other alternatives. The PWG shall review and consider comments and alternative solutions that are received within 14 calendar days of the Solutions Meeting and may respond or provide feedback as appropriate. To the extent a TAG participant proposes an alternative solution that is not selected by the PWG for the preferred Local Transmission Plan pursuant to Section 5.5, the draft "Local Transmission Plan Report" required by Section 5.6 will explain why the alternative was not selected.

5.4.3 All solution options that satisfactorily resolve an identified transmission need shall be given consideration on a comparable basis.

5.4.4 A solution that is seeking regional cost allocation must be submitted in accordance with the procedures set forth in Part II and will be evaluated through the SERTP Process.

5.4.5 The Companies will estimate the costs for each of the proposed Local Project (e.g., cost, cash flow, present value) and develop a rough schedule estimate to implement the solution. This information is reviewed and discussed by the PWG and during a Solutions Meeting.

5.5 Selection of Preferred Local Transmission Plan

5.5.1 The PWG compares all of the alternatives and selects the preferred

solution by balancing the solutions' costs, benefits, and associated risks. Competing solutions will be evaluated against each other based on a comparison of their relative economics, timing, feasibility, and effectiveness of performance.

5.5.2 The PWG selects a preferred set of solutions that provides the most reliable and cost effective solution while prudently managing the associated risks.

5.5.3 The PWG provides the OSC and the TAG participants with their recommendations based on this selection process in order to obtain their input.

5.6 Local Transmission Plan Report

5.6.1 After the Solutions Meeting, the PWG prepares a draft "Local Transmission Plan Report" based on the study results and the recommended solutions and provides the draft to the OSC for review. The draft Report describes the plan in a manner that is understandable to the TAG participants (e.g., describing any needs, the underlying assumptions, applicable planning criteria, and methodology used to determine the need), rather than simply reporting engineering results. The report includes a comprehensive summary of all the study activities as well as the recommended solutions including estimates of costs and construction schedules and a summary of the PWG's selection evaluation required by Section 5.5. The benefits evaluated for the recommended Multi-Value Strategic Transmission solutions will be described in the draft Local Transmission Plan Report.

5.6.2 After review and approval by the OSC, the Administrator forwards the draft Local Transmission Plan Report to the TAG participants and posts the draft Local Transmission Plan Report on the CTPC website for their review. The Companies shall schedule and facilitate a meeting to review the draft Local Transmission Plan Report. TAG participants may provide comments to the PWG on the draft Local Transmission Plan Report. TAG participants shall have at least 14 calendar days after it is posted on the CTPC website to comment on the draft Local Transmission Plan Report. The PWG members are the technical points of contact that can respond to questions regarding modeling criteria, assumptions, and data underlying the Report. The PWG shall review and consider comments that are received on or before the 14th calendar day after the draft Local Transmission Plan Report is posted on the CTPC website.

5.6.3 The OSC evaluates the draft Local Transmission Plan Report, the PWG recommendations, and the TAG participants' input. No fewer than 14 calendar days after the draft Local Transmission Plan Report is posted on the CTPC website, the OSC approves the final Local Transmission Plan for posting on the CTPC Website. The Plan also is posted on the Companies' OASIS and distributed to the TAG participants.

5.6.4 The Local Transmission Plan allows the CTPC Participants to identify alternative, least-cost resources to include with their respective Integrated Resource Plans. Others can similarly use this information for their own resource planning purposes.

5.6.5 The Local Transmission Plan, and the associated models, serve as the basis for the models that the Companies provide as input to the development of the SERC-wide model as described in Section 11.

5.6.6 The Local Transmission Plan, which reflects the coordination described in Section 11, will be an input into the SERTP Process. Local Projects identified in a Local Transmission Plan may later be removed from a Local Transmission Plan due to, for example, the iterative nature of transmission planning in subsequent planning cycles, additional transmission planning coordination provided through the SERTP Process, or if a project seeking regional cost allocation has been selected in the regional transmission expansion plan to replace a Local Project.

5.7 No Limitation on Additional Meetings and Communications

5.7.1 Nothing in this Attachment N-1 precludes the Companies, the OSC, or the PWG from agreeing with an individual TAG participant or groups of TAG participants to have additional meetings or other communications regarding assumptions, needs, proposed solutions, or Local Projects.

6. CTPC DISPUTE RESOLUTION MECHANISM

6.1 CTPC Process Disputes

6.1.1 A Company has the right to reject an OSC decision if it believes that it would harm reliability. The Company rejecting the OSC decision on reliability grounds must provide data, studies, or other evidence to the OSC to support its rejection.

6.1.2 The dispute resolution process provisions included in this Tariff apply to disputes involving compliance with the Commission's local transmission planning obligations set forth in Order No. 890. Any TAG participant, not just a TAG participant that is a Transmission Customer, may avail itself of the dispute resolution provision of the Tariff, as that process is modified below.

6.1.3 If a TAG participant has completed the negotiation step set forth in Section 12.1 of this Tariff, a TAG participant may ask to have the issue mediated on a non-binding basis before the next step (i.e., arbitration) commences. A request for mediation must be made within 30 calendar days of the agreed-upon conclusion of the negotiation step. If the mediation step is concluded without resolution, the disputing party has 30 calendar days to inform the Company(ies) that it seeks to commence the arbitration step set forth in Tariff Section 12.2. If this mediation option is selected, the parties to the dispute will

use the Commission's Dispute Resolution Service as the forum for mediation.

6.1.4 Matters over which the Commission does not have jurisdiction, including planning to meet retail native load of the Companies, shall not be within the scope of the dispute resolution process of this Tariff.

6.2 Transmission Siting Disputes

6.2.1 The South Carolina Code of Laws Section 58, Chapter 33 addresses disputes involving utilities' transmission projects that require South Carolina Public Service Commission authorization through the certificates of public convenience and necessity process.

6.2.2 NCUC Rule R8-62 addresses disputes involving utilities' transmission projects that require North Carolina Utilities Commission authorization through the certificates of public convenience and necessity process.

6.3 Integrated Resource Planning Disputes

6.3.1 The NCUC allows public participation in and may hold hearings regarding matters related to integrated resource planning.

6.3.2 The South Carolina Public Service Commission allows public participation in and may hold hearings regarding matters related to integrated resource planning.

7. TRANSMISSION COST ALLOCATION FOR JOINT LOCAL PROJECTS

7.1 OATT Cost Allocation

With the exception of "Joint Local Reliability Projects" and "Joint Local Economic Projects" nothing in this Attachment is intended to alter the cost allocation policies of the Tariff.

7.2 Joint Local Reliability Project Cost Allocation

7.2.1 A Joint Local Reliability Project is defined as any reliability project that requires an upgrade to a Company's system that would not have otherwise been made based upon the reliability needs of the Company.

7.2.2 An "avoided cost" cost allocation methodology will apply to reliability projects where there is a demonstration that a Local Project meets the criteria for a Joint Local Reliability Project.

7.2.3 The CTPC Process results in a set of projects that satisfy the reliability criteria of the Companies who are parties to the Participation Agreement (i.e., Local Reliability Projects). Through this process, a project may be identified that meets a reliability need in a more cost-effective manner than if each Company were only considering projects

on its system to meet its reliability criteria. A Joint Local Reliability Project must have a cost of at least $1 million to be subject to the avoided-cost cost allocation methodology. The costs of a Joint Local Reliability Project with a cost of less than $1 million would be borne by each Company based on the costs incurred on its system.

7.2.4 Unless a Joint Local Reliability Project is determined by the CTPC Participants to be the most cost-effective solution to a reliability need, it will not be selected to be included in the Local Transmission Plan. But, if a Joint Local Reliability Project is determined by the CTPC Participants to be the most cost effective solution, it will have its costs allocated based on an avoided cost approach, whereby each Company looks at the stand-alone approach to maintaining reliable service and shares the savings of not implementing the stand-alone approach on a pro-rata basis. The avoided cost approach formula can be expressed as follow:

(Company X's Avoided Cost/Total Avoided Cost) * cost of Joint Local Reliability Project = Company X's Cost Allocation

(Company Y's Avoided Cost/Total Avoided Cost) * cost of Joint Local Reliability Project = Company Y's Cost Allocation

These cost responsibility determinations will then be reflected in transmission rates. The avoided cost approach also will take into account in determining avoided costs, the acceleration or delay of Joint Local Reliability Projects. Examples of the application of the avoided-cost approach may be found in *CTPC Transmission Cost Allocation*.

7.3 Joint Local Economic Project Cost Allocation

7.3.1 A Joint Local Economic Project is a project that permits energy to be transferred on a Point-to Point basis from an interface or a Point of Receipt on a Company's system to an interface or a Point of Delivery on another Company's system for a specified time period.

7.3.2 The costs of Joint Local Economic Projects are allocated on a "requestor pays" basis.

7.3.3 Transmission Customer(s) that are requesting a Joint Local Economic Project would provide the up-front funding of any transmission construction that was required to ensure that the transmission path capability that was created by the Joint Local Economic Project was available for the relevant time period. On the DEC and/or DEP systems, the Transmission Customer would receive a levelized repayment of this initial funding amount from DEC and/or DEP in the form of monthly transmission credits over a maximum 20-year period. The Companies will be permitted to work with the Transmission Customers to provide shorter or different crediting. As credits are paid, DEC and DEP would

have the opportunity to include the costs of upgrades that were needed for the Joint Local Economic Project(s) in transmission rates, similar to the Generator Interconnection pricing/rate approach.

7.3.4 As part of the Joint Local Economic Project process, a network customer may ensure that power can be delivered from an interface on, or utilizing transmission capability created by, a Joint Local Economic Project to network load. Such network transmission service would not be subject to the requestor pays approach. This transmission cost allocation would be in accordance with OATT provisions for network service.

7.3.5 No additional compensation is provided to the "requestors" of the Joint Local Economic Project for any "head-room" or excess transmission capability that would be created on the Transmission Systems. The total project cost for the transmission expansion required due to a Joint Local Economic Project will be reduced to provide compensation for the
7.3.6 positive transmission impacts that the Joint Local Economic Project would provide, compared to the existing Local Transmission Plan.

7.3.7 This Joint Local Economic Project concept and cost allocation methodology applies to the CTPC footprint, which consists of the DEC and DEP Control Areas.

8. COST ALLOCATION FOR PLANNING COSTS

8.1 CTPC-Related Planning Process Costs

8.1.1 Each CTPC Participant bears its own expenses.

8.1.2 TAG participants bear their own expenses.

8.1.3 The costs of the CTPC base reliability studies are borne by DEC and DEP.

8.1.4 Costs associated with the study process for Local Economic Projects, Public Policy Projects, and Multi-Value Strategic Transmission Projects are all allocated to CTPC Participants in the manner set forth in the *Participation Agreement*.

8.1.5 Pursuant to Section 4, costs associated with the Local Economic Project Study Process and Multi-Value Strategic Transmission Project Study Process that are outside the scope of Section 4, will be borne by the study requestor.

8.1.6 CTPC Participants may challenge the correctness of CTPC Process cost allocations.

8.1.7 For the Companies, transmission planning costs are a routine cost-of-service item that would be reflected in both wholesale and retail transmission rates. There is no plan to allocate planning costs to customers, other than as described above, or as contemplated by this

Tariff when a customer makes a specific request that must be studied.

8.2 Non-CTPC-Related Planning Costs

Each Company will bear its own costs of planning-related activities that are not occurring through the rubric of the CTPC Process, which costs may be recovered in rates, pursuant to the then-applicable ratemaking policies.

9. CONFIDENTIALITY

9.1 The Companies will take appropriate steps to protect CEII information, which is one form of Confidential Information.

9.2 Identification of Confidential Information

The confidentiality of information is determined in the first instance by a CTPC Participant or TAG participant providing the information. Examples of Confidential Information, other than CEII, include commercially sensitive information and customer-related information that is proprietary to a particular wholesale or retail customer. The CTPC Participant or TAG participant providing Confidential Information acknowledges that such Confidential Information may be released to the representatives of TAG participants that have abided by the procedures in Section 9.4.3. If the information is Confidential Information only because it is CEII, the CTPC Participant or TAG participant should indicate that such information may be released to TAG participants eligible to receive CEII.

9.3 Availability of Confidential Information

9.3.1 The CTPC Participants will mask all Confidential Information in documents that are released to the public.

9.3.2 Confidential Information will be made available, to the extent not prohibited by law or government policy, to the CTPC Participants, as limited by the *Participation Agreement*. Each CTPC Participant is restricted from sharing or giving access to Confidential Information with any employee, representative, and/or organization directly involved in the sale and/or resale of electricity in the wholesale electricity market such that they do not receive preferential treatment or a competitive advantage.

9.3.3 TAG participants may be provided Confidential Information, in accordance with Section 9.4.3/9.4.4. In cases where the information is Confidential Information only because it is CEII, the TAG participants may be provided such information in accordance with Section 9.4.4.

9.4 Obtaining Confidential Information

9.4.1 Each Company is tasked with ensuring that no marketing/brokering organizations receive preferential treatment or achieve competitive advantage through the distribution of any transmission-related information in the TAG.

9.4.2 Each Company ensures that the confidentiality of information principles reflected in Order No. 890 as well as any Standards of Conduct or Code of Conduct requirements are being adhered to within the TAG process, to the extent applicable and/or necessary.

9.4.3 If a TAG participant seeks non-CEII Confidential Information, s/he must formally request the data from the Company OSC representatives representing the non-CEII Confidential Information and the CTPC Administrator and demonstrate that s/he:

9.4.3.1 Is a representative of a TAG Sector Entity that has signed the CTPC Process Confidentiality Agreement or is an Individual that has signed the CTPC Process Confidentiality Agreement.

9.4.3.2 Is listed on Attachment A to a TAG Sector Entity's TAG Confidentiality Agreement as a representative of a TAG Sector Entity or is an Individual that has signed the CTPC Process Confidentiality Agreement.

9.4.4 If a TAG participant seeks CEII, s/he must formally request the data from the Company OSC representatives representing the CEII and the CTPC Administrator and demonstrate that s/he:

9.4.4.1 Is a representative of a TAG Sector Entity that has signed the CTPC Process Confidentiality Agreement or is an Individual that has signed the CTPC Process Confidentiality Agreement.

9.4.4.2 Is listed on Attachment A of a TAG Sector Entity's CTPC Process Confidentiality Agreement as a representative of a TAG Sector Entity or is an Individual that has signed the CTPC Process Confidentiality Agreement.

9.4.4.3 Each Company will process the above requests, approve/deny the request, and if approved, provide the data to a TAG participant.

10. INTEGRATED RESOURCE AND SUB-LOCAL PLANNING

10.1 Integrated Resource Planning

In addition to the CTPC Process, the Companies must abide by state laws and regulations regarding Integrated Resource Planning (IRP) pursuant to N.C. G.S. § 62-110.1 and S.C. Code Ann. § 58-37-40.

10.2 Sub-Local Planning

The Companies coordinate with their network and native load customers to ensure adequate and reliable electric service to all points of delivery within their control areas. The focus of the CTPC Process is planning higher-voltage facilities and transfers of bulk power and thus "sub-local planning" focuses on lower-voltage facilities and the delivery

of energy to customer locations. Customer meetings may be held, when necessary, to discuss the respective plans of the customer and the provider and how such plans impact local areas. Any sub-local area plans developed by a Company are rolled into the CTPC transmission Base Case models. The same data and assumptions would be used in sub-local planning as are used in the CTPC Process.

11. ADDITIONAL COORDINATION

11.1 Coordination Activities Within SERC

DEC and DEP are members of the SERC Reliability Corporation (SERC) and coordinate with other SERC members registered as Transmission Planners. SERC is the entity responsible for promoting and improving the reliability, adequacy, and critical infrastructure of the bulk power supply systems in the area served by its member systems. SERC membership is open to any entity that is a user, owner, or operator of the Bulk-Power System and is subject to the jurisdiction of FERC for the purpose of complying with Reliability Standards. SERC membership is comprised of investor-owned, municipal, cooperative, state and federal systems, RTOs/ISOs, merchant electricity generators, and power marketers. SERC has in place various committees and subcommittees that perform the identified SERC functions, including the promotion of the reliability and adequacy of the bulk power system as related to the planning and engineering of the electric systems. The SERC committees are identified on SERC's website. The particular activities that are coordinated among the Transmission Planners include the creation of a SERC-wide model and the preparation of a simultaneous feasibility assessment, which are discussed in further detail below.

11.1.1 Reliability Planning by Transmission Planners Located in SERC: A Transmission Planner's 10-year transmission expansion plan is the basis for models used for its own reliability planning process(es), such as the CTPC Process, as well as serving as a Transmission Planner's input into the development of the SERC-wide model.

Substantive transmission planning occurs as Transmission Planners develop reliability transmission expansions plans through their planning process(es), such as the CTPC Process. In this regard, the reliability plan for each planning process is generally developed by determining therequired 10-year transmission expansion plan to satisfy load, resources, and transmission service commitments throughout the 10-year reliability planning horizon. The development of each reliability plan is facilitated through the creation of transmission models (base cases) that incorporate the current 10-year transmission expansion plan, load projections, resource assumptions (generation, demand response, and imports), and transmission service commitments. The transmission models also incorporate external models (at a minimum the current SERC models) that are developed using similar assumptions.

The transmission models created for use in developing the reliability 10-year transmission expansion plan are analyzed to determine if any planning criteria concerns are projected. In the event one or more planning criteria concerns are identified, the relevant Transmission Planners will develop solutions for these projected limitations in

accordance with the planning process to which they belong. As a part of this study process, the Transmission Planners, in accordance with the process to which they belong, will reexamine the current reliability 10-year transmission expansion plan (determined through the previous year's reliability planning process) to determine if the current plan can be optimized based on the updated assumptions and any new planning criteria concerns identified in the analysis. The optimization process may include the deletion and/or modification of any of the existing reliability transmission enhancements identified in the previous year's reliability planning process.

11.1.2 Coordination by Transmission Planners with Affected Systems: Once a planning criteria concern is identified and the optimization process identifies the potential solution, the Transmission Planner(s), here DEC and DEP, determine if any other Transmission Planner is potentially impacted by the projected solution. Potentially impacted Transmission Planners are then contacted to determine if there is a need for an *ad hoc* coordinated study. In the event one or more neighboring Transmission Planners agrees that they would be impacted by the projected limitation or identifies the potential for a superior reliability solution, based on transmission enhancements in their current reliability plan, an *ad hoc* coordinated study is initiated. In the event that no impacts are identified, or if once contacted the potentially impacted Transmission Planner(s) determine that they will not actually be impacted, the initiating Transmission Planner will move forward to conduct a reliability study to determine the solution for the projected planning criteria concern. In either case, once the study has been completed, the identified reliability transmission enhancements will then be incorporated into the 10-year transmission expansion plan as a reliability project.

11.1.3 SERC-Wide Reliability Assessment by Transmission Planners: After the transmission models are developed through the planning processes, the Transmission Planners within SERC create a SERC-wide transmission model and conduct a long-term reliability assessment. The intent of the SERC-wide reliability assessment is to determine if the different reliability transmission expansion plans are simultaneously feasible and to otherwise ensure that these processes are using consistent models and data. Additionally, the reliability assessment measures and reports the transfer capabilities within SERC. The SERC-wide assessment serves as a valuable tool for each of the Transmission Planners to reassess the need for additional reliability joint studies.

11.1.4 Other Coordination Activities Within SERC

11.1.4.1 Transmission Model Development: SERC transmission models are developed by the Transmission Planners in SERC through an annual model development process. Each Transmission Planner in SERC, incorporating input from their planning process(es), develops and submits their 10-year transmission models to a model development databank. The databank then joins the models to create SERC-wide models

for use in reliability assessment. Additionally, the SERC-wide models are then used in each planning process as an update (if needed) to the current transmission models and as a foundation (along with the MMWG models) for the development of next year's transmission models.

11.1.4.2 Additional Reliability Joint Studies: As mentioned above, the SERC-wide reliability assessment serves as a valuable tool for the Transmission Planners, in accordance with their planning process(es), to reassess the need for additional reliability joint studies. If the SERC-wide reliability model projects additional planning criteria concerns that were not identified in the reliability studies, then the impacted Transmission Planners may initiate one or more *ad hoc* coordinated study(ies) (in accordance with existing Reliability Coordination Agreements) to better identify the planning criteria concerns and determine the optimal reliability transmission enhancements to resolve the limitations. Once the study(ies) is completed, required reliability transmission enhancements will be incorporated into the 10-year expansion plan as a reliability project. Accordingly, planning criteria concerns identified at the SERC-wide level are "pushed down" to the Local Planning Process for detailed resolution.

11.1.5 Stakeholder Participation in Planning and Coordination Activities:

Since the bulk of the reliability transmission planning occurs at the local planning level as a "bottom up" process in the development of the various 10-year transmission expansion plans, stakeholders in the CTPC footprint may provide input into the coordination activities by participating in the CTPC Process and any other planning processes that they choose to participate in. Specifically, the 10-year Local Transmission Plan developed in the CTPC Process described in this Attachment is the basis for DEC's and DEP's input into the SERC model development. As discussed in Sections 4 and 5, the TAG participants are provided a number of opportunities to review and comment on and allowed to propose alternatives concerning the development of this transmission expansion plan. The results of coordination activities will be shared and discussed with TAG participants.

11.2 ERAG & SERC-RFC East Coordination Activities

11.2.1 SERC is a Member of the Eastern Interconnection Reliability Assessment Group (ERAG) along with the Florida Reliability Coordinating Council, Inc., the Midwest Reliability Organization, the Northeast Power Coordinating Council, Inc., ReliabilityFirst Corporation, and the Southwest Power Pool. ERAG augments the reliability of the bulk-power system through periodic reviews of generation and transmission expansion programs and forecasted system conditions within the areas served by ERAG members.

11.2.2 The Eastern Interconnection Reliability Assessment Group (ERAG) Multi-Regional Modeling Working Group (MMWG) administers the development of a library of power-flow base case models for the benefit of members.

11.2.3 The SERC-RFC East study group was established in 2006 and is a sub-group within the ERAG structure. Through the SERC-RFC East study group, coordination of plans, data and assumptions is achieved between Tennessee Valley Authority, VACAR, and the transmission systems of the eastern portion of PJM.

11.3 Bilateral Coordination Activities

Through bilateral agreements with neighboring transmission systems, DEC and DEP will perform coordinated studies with such transmission systems on an as-needed basis.

PART II -- REGIONAL TRANSMISSION PLANNING

12. OVERVIEW OF REGIONAL TRANSMISSION PLANNING

Duke and Progress, referred to collectively for the purposes of regional transmission planning as the "Duke Transmission Provider" participate in the SERTP Process described herein and on the Regional Planning Website, a link to which is found on the Duke and Progress OASIS sites. The Duke Transmission Provider and the other transmission owners and transmission providers that participate in this SERTP Process are identified on the Regional Planning Website (Sponsors).[1]

[1] Duke and Progress are each separate "transmission providers" as that term is defined in this Tariff and under the Code of Federal Regulations. They are referred to here as the Duke Transmission Provider only for the purpose of Order No. 1000-mandated regional planning. The Duke Transmission Provider notes that the Duke Transmission Provider's participation in the SERTP is for purposes of regional planning only, since local planning is conducted in accordance with the Local Planning Process as described in Sections 1-11 of this Attachment N-1. While this Attachment N-1 discusses the Duke Transmission Provider largely effectuating the activities of the SERTP Process that are discussed herein, the Duke Transmission Provider expects that the other Sponsors will also sponsor those activities. For example, while this Attachment N-1 discusses the Duke Transmission Provider hosting the Annual Transmission Planning Meetings, the Duke Transmission Provider expects that it will be co-hosting such meetings with the other Sponsors. Accordingly, many of the duties described herein as being performed by the Duke Transmission Provider may be performed in conjunction with one or more other Sponsors or may be performed entirely by, or be applicable only to, one or more other Sponsors. Likewise, while this Attachment N-1 discusses the transmission expansion plan of the Duke Transmission Provider, the Duke Transmission Provider expects that transmission expansion plans of the other Sponsors shall also be discussed, particularly since the transmission expansion plans of the other Sponsors are expected to be included in the regional transmission plan that is to be developed in each planning cycle for purposes of Order No. 1000. To the extent that this Attachment N-1 makes statements that might be construed to imply establishing duties or obligations upon other Sponsors, no such duty or obligation is intended. Rather, such

statements are intended to only mean that it is the Duke Transmission Provider's expectation that

(cont'd)

The Duke Transmission Provider participates in the SERTP through which transmission facilities and non-transmission alternatives may be proposed and evaluated. This regional transmission planning process develops a regional transmission plan that identifies the transmission facilities necessary to meet the needs of transmission providers and transmission customers in the transmission planning region for purposes of Order No. 1000. This regional transmission planning process is consistent with the provision of Commission-jurisdictional services at rates, terms and conditions that are just and reasonable and not unduly discriminatory or preferential, as described in Order No. 1000.

This regional transmission planning process satisfies the following seven principles, as set out and explained in Order No. 1000: coordination, openness, transparency, information exchange, comparability,[2] dispute resolution, and economic planning studies. This transmission planning process includes at Sections 4.3 and 19 the procedures and mechanisms for considering transmission needs driven by Public Policy Requirements, consistent with Order No. 1000. Transmission needs consist of the physical transmission system delivery capacity requirements necessary to reliably and economically satisfy the load projections; resource assumptions, including on-system and off-system supplies for current and future native load and network customer needs; public policy requirements; and transmission service commitments within the region. [3] This transmission planning process provides at Section 8 a mechanism for the recovery and allocation of planning costs consistent with Order Nos. 890 and 1000. This regional transmission planning process includes at Section 22 a clear enrollment process for public and non-public utility transmission providers that make the choice to become part of a transmission planning region for purposes of regional cost allocation. This regional transmission

---

(cont'd from previous page)

other Sponsors will engage in such activities. Accordingly, this Attachment N-1 only establishes the duties and obligations of the Duke Transmission Provider and the means by which Stakeholders may interact with the Duke Transmission Provider with respect to regional planning through the SERTP Process described herein. The term "Stakeholder" as used in this Attachment N-1 means any party interested in the Southeastern Regional Transmission Planning Process, including but not limited to transmission and interconnection customers, generation owners/development companies, developers of alternative resources, or state commissions.

[2] The Duke Transmission Provider is committed to providing comparable and non-discriminatory transmission service. As such, comparability is not separately addressed in a stand-alone Section of this Attachment N-1 but instead permeates the SERTP Process described in this Attachment N-1.

[3] As provided herein, Transmission Customers can provide input regarding updates to these needs assumptions consistent with Data Collection and Case Development provisions of Section 5.3 and the Information Exchange provisions of Section 16. Additionally, Stakeholder input is considered in the determination of transmission needs consistent with the Data Collection and Case Development provisions of Section 5.3 and through input regarding the transmission planning modeling assumptions consistent with the Coordination provisions of Section 13 and specifically related to transmission needs driven by public policy requirements consistent with Sections 4.3 and 19.2. Stakeholders can also provide input on Economic Planning Studies pursuant to Sections 4.2 and 18.

planning process subjects enrollees to cost allocation if they are found to be Beneficiaries of new transmission facilities selected in the regional transmission plan for purposes of cost allocation.[4]

Attachment N-3 contains a list of Enrollees as of the effective date of such tariff record. The relevant cost allocation method or methods that satisfy the six regional cost allocation principles set forth in Order No. 1000 are described in Sections 26-27 of this Attachment N-1. Nothing in this regional transmission planning process includes an unduly discriminatory or preferential process for transmission project submission and selection. As provided below, with respect to regional planning, the SERTP includes sufficient detail to enable Transmission Customers to understand:

12.1 The process for enrollment and terminating enrollment in the SERTP, which is set forth in Section 22 of this Attachment N-1;

12.2 The process for consulting with customers regarding regional transmission planning, which is set forth in Section 13 of this Attachment N-1;

12.3 The notice procedures and anticipated frequency of regional transmission planning meetings, which is set forth in Sections 13 and 14 of this Attachment N-1;

12.4 The Duke Transmission Provider's regional transmission planning methodology, criteria, and processes, which are set forth in Section 15 of this Attachment N-1;

12.5 The method of disclosure of regional transmission planning criteria, assumptions and underlying data, which is set forth in Sections 14 and 15 of this Attachment N-1;

12.6 The obligations of and methods for Transmission Customers to submit data if necessary to support the regional transmission planning process, which are set forth in Section 16 of this Attachment N-1;

12.7 The process for submission of data by nonincumbent developers of transmission projects that wish to participate in the regional transmission planning process and seek regional cost allocation for purposes of Order No. 1000, which is set forth in Sections 23-31 of this Attachment N-1;

12.8 The process for submission of data by merchant transmission developers that wish to participate in the regional transmission planning process, which is set forth in Section 21 of this Attachment N-1;

---

[4] Enrollees that are identified pursuant to Section 26 to potentially receive cost savings (associated with the regional cost allocation components in Section 27) due to the transmission developer's proposed transmission project for possible selection in a regional transmission plan for regional cost allocation purposes (“RCAP”) shall be referred to as "Beneficiaries."

12.9 The regional dispute resolution process, which is set forth in Section 17 of this Attachment N-1;

12.10 The study procedures for regional economic upgrades to address congestion or the integration of new resources, which is set forth in Section 18 of this Attachment N-1;

12.11 The procedures and mechanisms for considering transmission needs driven by Public Policy Requirements, consistent with Order No. 1000, which are set forth in Section 19 of this Attachment N-1; and

12.12 The relevant regional cost allocation method or methods satisfying the six regional cost allocation principles set forth in Order No. 1000, which is set forth at Section 26-27.

12.13 The process for interregional coordination as described in Attachment N-1 – FRCC, Attachment N-1 – MISO, Attachment N-1 – PJM, Attachment N-1 – SCRTP, and Attachment N-1 – SPP.

13. COORDINATION

13.1 General: The SERTP Process is designed to eliminate the potential for undue discrimination in planning by establishing appropriate lines of communication between the Duke Transmission Provider, its transmission-providing neighbors, affected state authorities, Transmission Customers, and other Stakeholders regarding transmission planning issues.

13.2 Meeting Structure: Each calendar year, the SERTP Process will generally conduct and facilitate four (4) meetings (Annual Transmission Planning Meetings) that are open to all Stakeholders. However, the number of Annual Transmission Planning Meetings, or duration of any particular meeting, may be adjusted by announcement upon the Regional Planning Website, provided that any decision to reduce the number of Annual Transmission Planning Meetings must first be approved by the Sponsors and by the Regional Planning Stakeholders' Group (RPSG). These meetings can be done in person, through phone conferences, or through other telecommunications or technical means that may be available. The details regarding any such meeting will be posted on the Regional Planning Website, with a projected meeting schedule for a calendar year being posted on the Regional Planning Website on or before December 31st of the prior calendar year, with firm dates for all Annual Transmission Planning Meetings being posted at least 60 calendar days prior to a particular meeting. The general structure and purpose of these four (4) meetings will be as follows:

13.2.1 First RPSG Meeting and Interactive Training Session: At this meeting, which will be held in the first quarter of each calendar year, the RPSG will be formed for purposes of that year. In addition, the Duke Transmission Provider will meet with the RPSG and any other interested Stakeholders for the purposes of allowing the RPSG to select up to five

(5) Stakeholder requested Economic Planning Studies[5] that they would like to have studied by the Duke Transmission Provider and the Sponsors. At this meeting, the Duke Transmission Provider will work with the RPSG to assist the RPSG in formulating these Economic Planning Study requests. The Duke Transmission Provider will also conduct an interactive training session regarding its transmission planning for all interested Stakeholders. This session will explain and discuss the underlying methodology and criteria that will be utilized to develop the transmission expansion plan[6] before that methodology and criteria are finalized for purposes of the development of that year's transmission expansion plan (*i.e.*, the expansion plan that is intended to be implemented the following calendar year).[7] Stakeholders may submit comments to the Duke Transmission Provider regarding the Duke Transmission Provider's criteria and methodology during the discussion at the meeting or within ten (10) business days after the meeting, and the Duke Transmission Provider will consider such comments. Depending upon the major transmission planning issues presented at that time, the Duke Transmission Provider will provide various technical experts that will lead the discussion of pertinent transmission planning topics, respond to Stakeholder questions, and provide technical guidance regarding transmission planning matters. It is foreseeable that it may prove appropriate to shorten the training sessions as Stakeholders become increasingly knowledgeable regarding the Duke Transmission Provider's transmission planning process and no longer need detailed training in this regard.

The Duke Transmission Provider will also address transmission planning issues that the Stakeholders may raise.

---

[5] As indicated *infra* at footnote 1, the Economic Planning Studies discussed in the regional planning portion of this Attachment N-1 (Sections 12-31) refer to the regional Economic Planning Studies conducted through the SERTP Process.

[6] The expectation is that in any given planning cycle, the Duke Transmission Provider's ten year transmission expansion plan along with those of the other Sponsors, will be included in the regional transmission plan. Moreover, the iterative nature of transmission planning bears emphasis, with underlying assumptions, needs, and data inputs continually changing to reflect market decisions, load service requirements, and other developments. A transmission plan, thus, only represents the status of transmission planning when the plan was prepared.

[7] A regional transmission expansion plan completed during one calendar year (and presented to Stakeholders at that calendar year's Annual Transmission Planning Summit) is intended to be the starting point plan for the following calendar year. For example, the regional transmission expansion plan developed during 2014 and presented at the 2014 Annual Transmission Planning Summit is for the 2015 calendar year.

13.2.2 Preliminary Expansion Plan Meeting: During the second quarter of each calendar year, the Duke Transmission Provider will meet with all interested Stakeholders to explain and discuss: the Duke Transmission Provider's preliminary transmission expansion plan, which is also input into that year's SERC (or other applicable NERC region's) regional model; internal model updating and any other then-current coordination study activities with the transmission providers in the Florida Reliability Coordinating Council (FRCC); and any *ad hoc* coordination study activities that might be occurring. These preliminary transmission expansion plan, internal model updating, and coordination study activities will be described to the Stakeholders, with this meeting providing them an opportunity to supply their input and feedback, including the transmission plan/enhancement alternatives that the Stakeholders would like the Duke Transmission Provider and the Sponsors to consider. The Duke Transmission Provider will also provide an update as to the status of its regional planning analyses performed pursuant to Section 20. In addition, the Duke Transmission Provider will address transmission planning issues that the Stakeholders may raise and otherwise discuss with Stakeholders developments as part of the SERC (or other applicable NERC region's) reliability assessment process.

13.2.3 Second RPSG Meeting: During the third quarter of each calendar year, the Duke Transmission Provider will meet with the RPSG and any other interested Stakeholders to report the preliminary results for the Economic Planning Studies requested by the RPSG at the First RPSG Meeting and Interactive Training Session. This meeting will give the RPSG an opportunity to provide input and feedback regarding those preliminary results, including alternatives for possible transmission solutions that have been identified. At this meeting, the Duke Transmission Provider shall provide feedback to the Stakeholders regarding transmission expansion plan alternatives that the Stakeholders may have provided at the Preliminary Expansion Plan Meeting, or within a designated time following that meeting. The Duke Transmission Provider will also discuss with the Stakeholders the results of the SERC (or other applicable NERC region's) regional model development for that year (with the Duke Transmission Provider's input into that model being its ten (10) year transmission expansion plan); any on-going coordination study activities with the FRCC transmission providers; and any *ad hoc* coordination study activities. In addition, the Duke Transmission Provider will address transmission planning issues that the Stakeholders may raise.

13.2.4 Annual Transmission Planning Summit and Assumptions Input Meeting: During the fourth quarter of each calendar year, the Duke Transmission Provider will host the annual Transmission Planning Summit and Assumptions Input Meeting.

13.2.4.1 Annual Transmission Planning Summit: At the Annual Transmission Planning Summit aspect of the Annual Transmission Planning Summit and Assumptions Input Meeting, the Duke Transmission Provider will present the final results for the Economic Planning Studies. The Duke Transmission Provider will also provide an overview of the ten (10) year transmission expansion plan, which reflects the results of planning analyses performed in the then-current planning cycle, including analyses performed pursuant to Section 20. The Duke Transmission Provider will also provide an overview of the regional transmission plan for Order No. 1000 purposes, which should include the ten (10) year transmission expansion plan of the Duke Transmission Provider. In addition, the Duke Transmission Provider will address transmission planning issues that the Stakeholders may raise.

13.2.4.2 Assumptions Input Session: The Assumptions Input Session aspect of the Annual Transmission Planning Summit and Assumptions Input Meeting will take place following the annual Transmission Planning Summit and will provide an open forum for discussion with, and input from, the Stakeholders regarding: the data gathering and transmission model assumptions that will be used for the development of the Duke Transmission Provider's following year's ten (10) year transmission expansion plan, which includes the Duke Transmission Provider's input, to the extent applicable, into that year's SERC regional model development; internal model updating and any other then-current coordination study activities with the transmission providers in the FRCC; and any *ad hoc* coordination study activities that might be occurring. This meeting may also serve to address miscellaneous transmission planning issues, such as reviewing the previous year's regional planning process, and to address specific transmission planning issues that may be raised by Stakeholders.

13.3 Committee Structure - the RPSG: The RPSG has two primary purposes. First, the RPSG is charged with determining and proposing up to five (5) Economic Planning Studies on an annual basis and should consider clustering similar Economic Planning Study requests. Second, the RPSG serves as the representative in interactions with the Duke Transmission Provider and Sponsors for the eight (8) industry sectors identified below.

13.3.1 RPSG Sector Representation: The Stakeholders are organized into the following eight (8) sectors for voting purposes within the RPSG:

(1) Transmission Owners/Operators[8]

(2) Transmission Service Customers

(3) Cooperative Utilities

(4) Municipal Utilities

(5) Power Marketers

(6) Generation Owners/Developers

(7) ISO/RTOs

(8) Demand Side Management/Demand Side Response

13.3.2 Sector Representation Requirements: Representation within each sector is limited to two members, with the total membership within the RPSG being capped at 16 members (Sector Members). The Sector Members, each of whom must be a Stakeholder, are elected by Stakeholders, as discussed below. A single company, and all of its affiliates, subsidiaries, and parent company, is limited to participating in a single sector.

13.3.3 Annual Reformulation: The RPSG will be reformed annually at each First RPSG Meeting and Interactive Training Session discussed in Section 13.2.1. Specifically, the Sector Members will be elected for a term of approximately one year that will terminate upon the convening of the following year's First RPSG Meeting and Interactive Training Session. Sector Members shall be elected by the Stakeholders physically present at the First RPSG Meeting and Interactive Training Session (voting by sector for the respective Sector Members). If elected, Sector Members may serve consecutive, one-year terms, and there is no limit on the number of terms that a Sector Member may serve.

13.3.4 Simple Majority Voting: RPSG decision-making that will be recognized by the Duke Transmission Provider for purposes of this Attachment N-1 shall be those authorized by a simple majority vote by the then-current Sector Members, with voting by proxy being permitted for a Sector Member that is unable to attend a particular meeting. The Duke Transmission Provider will notify the RPSG of the matters upon which

[8] The Sponsors will not have a vote within the Transmission Owners/Operators sector, although they (or their affiliates, subsidiaries or parent company) shall have the right to participate in other sectors.

an RPSG vote is required and will use reasonable efforts to identify upon the Regional Planning Website the matters for which an RPSG decision by simple majority vote is required prior to the vote, recognizing that developments might occur at a particular Annual Transmission Planning Meeting for which an RPSG vote is required but that could not be reasonably foreseen in advance. If the RPSG is unable to achieve a majority vote, or should the RPSG miss any of the deadlines prescribed herein or clearly identified on the Regional Planning Website and/or at a particular meeting to take any action, then the Duke Transmission Provider will be relieved of any obligation that is associated with such RPSG action.

13.3.5 RPSG Guidelines/Protocols: The RPSG is a self-governing entity subject to the following requirements that may not be altered absent an appropriate filing with the Commission to amend this aspect of the Tariff: (i) the RPSG shall consist of the above-specified eight (8) sectors; (ii) each company, its affiliates, subsidiaries, and parent company, may only participate in a single sector; (iii) the RPSG shall be reformed annually, with the Sector Members serving terms of a single year; and (iv) RPSG decision-making shall be by a simple majority vote (*i.e.*, more than 50%) by the Sector Members, with voting by written proxy being recognized for a Sector Member unable to attend a particular meeting. There are no formal incorporating documents for the RPSG, nor are there formal agreements between the RPSG and the Duke Transmission Provider. As a self-governing entity, to the extent that the RPSG desires to adopt other internal rules and/or protocols, or establish subcommittees or other structures, it may do so provided that any such rule, protocol, etc., does not conflict with or otherwise impede the foregoing requirements or other aspects of the Tariff. Any such additional action by the RPSG shall not impose additional burdens upon the Duke Transmission Provider unless it agrees in advance to such in writing, and the costs of any such action shall not be borne or otherwise imposed upon the Duke Transmission Provider unless the Duke Transmission Provider agrees in advance to such in writing.

13.4 The Role of the Duke Transmission Provider in Coordinating the Activities of the SERTP Process Meetings and of the Functions of the RPSG: The Duke Transmission Provider will host and conduct the above-described Annual Transmission Planning Meetings with Stakeholders.[9]

13.5 Procedures Used to Notice Meetings and Other Planning-Related Communications: Meetings notices, data, stakeholder questions, reports, announcements, registration for inclusion in distribution lists, means for being

[9] As previously discussed, the Duke Transmission Provider expects that the other Sponsors will also be hosts and sponsors of these activities.

certified to receive Critical Energy Infrastructure Information (CEII), and other transmission planning-related information will be posted on the Regional Planning Website. Stakeholders will also be provided notice regarding the annual meetings by e-mail messages (if they have appropriately registered on the Regional Planning Website to be so notified). Accordingly, interested Stakeholders may register on the Regional Planning Website to be included in e-mail distribution lists (Registered Stakeholder). For purposes of clarification, a Stakeholder does not have to have received certification to access CEII in order to be a Registered Stakeholder.

13.6 Procedures to Obtain CEII Information: For access to information considered to be CEII, there will be a password protected area that contains such CEII information. Any Stakeholder may seek certification to have access to this CEII data area.

13.7 The Regional Planning Website: The Regional Planning Website will contain information regarding the SERTP Process, including:

13.7.1 Notice procedures and e-mail addresses for contacting the Sponsors and for questions;

13.7.2 A calendar of meetings and other significant events, such as release of draft reports, final reports, data, etc.;

13.7.3 A registration page that allows Stakeholders to register to be placed upon an e-mail distribution list to receive meetings notices and other announcements electronically; and

13.7.4 The form in which meetings will occur (*i.e.*, in person, teleconference, webinar, *etc*.).

14. OPENNESS

14.1 General: The Annual Transmission Planning Meetings, whether consisting of in-person meetings, conference calls, or other communicative mediums, will be open to all Stakeholders. The Regional Planning Website will provide announcements of upcoming events, with Stakeholders being notified regarding the Annual Transmission Planning Meetings by such postings. In addition, Registered Stakeholders will also be notified by e-mail messages. Should any of the Annual Transmission Planning Meetings become too large or otherwise become unmanageable for the intended purpose(s), smaller breakout meetings may be utilized.

14.2 Links to OASIS: In addition to open meetings, the publicly available information, CEII-secured information (the latter of which is available to any Stakeholder certified to receive CEII), and certain confidential non-CEII information (as set forth below) shall be made available on the Regional Planning Website, a link to which is found on the Duke Transmission Provider's OASIS website, so as to

further facilitate the availability of this transmission planning information on an open and comparable basis.

14.3 CEII Information

14.3.1 Criteria and Description of CEII: The Commission has defined CEII as being specific engineering, vulnerability, or detailed design information about proposed or existing critical infrastructure (physical or virtual) that:

14.3.1.1 Relates details about the production, generation, transmission, or distribution of energy;

14.3.1.2 Could be useful to a person planning an attack on critical infrastructure;

14.3.1.3 Is exempt from mandatory disclosure under the Freedom of Information Act; and

14.3.1.4 Does not simply give the general location of the critical infrastructure.

14.3.2 Secured Access to CEII Data: The Regional Planning Website will have a secured area containing the CEII data involved in the SERTP Process that will be password accessible to Stakeholders that have been certified to be eligible to receive CEII data. For CEII data involved in the SERTP Process that did not originate with the Duke Transmission Provider, the duty is incumbent upon the entity that submitted the CEII data to have clearly marked it as CEII.

14.3.3 CEII Certification: In order for a Stakeholder to be certified and be eligible for access to the CEII data involved in the SERTP Process, the Stakeholder must follow the CEII certification procedures posted on the Regional Planning Website (*e.g.*, authorize background checks and execute the SERTP CEII Confidentiality Agreement posted on the Regional Planning Website). The Duke Transmission Provider reserves the discretionary right to waive the certification process, in whole or in part, for anyone that the Duke Transmission Provider deems appropriate to receive CEII information. The Duke Transmission Provider also reserves the discretionary right to reject a request for CEII; upon such rejection, the requestor may pursue the dispute resolution procedures of Section 17.

14.3.4 Discussions of CEII Data at the Annual Transmission Planning Meetings: While the Annual Transmission Planning Meetings are open to all Stakeholders, if CEII information is to be discussed during a portion of such a meeting, those discussions will be limited to being only with those Stakeholders who have been certified eligible to have

access to CEII information, with the Duke Transmission Provider reserving the discretionary right at such meeting to certify a Stakeholder as being eligible if the Duke Transmission Provider deems it appropriate to do so.

14.4 Other Sponsor- and Stakeholder- Submitted Confidential Information: The other Sponsors and Stakeholders that provide information to the Duke Transmission Provider that foreseeably could implicate transmission planning should expect that such information will be made publicly available on the Regional Planning Website or may otherwise be provided to Stakeholders in accordance with the terms of this Attachment N-1. Should another Sponsor or Stakeholder consider any such information to be CEII, it shall clearly mark that information as CEII and bring that classification to the Duke Transmission Provider's attention at, or prior to, submittal. Should another Sponsor or Stakeholder consider any information to be submitted to the Duke Transmission Provider to otherwise be confidential (*e.g.*, competitively sensitive), it shall clearly mark that information as such and notify the Duke Transmission Provider in writing at, or prior to, submittal, recognizing that any such designation shall not result in any material delay in the development of the transmission expansion plan or any other transmission plan that the Duke Transmission Provider (in whole or in part) is required to produce.

14.5 Procedures to Obtain Confidential Non-CEII Information

14.5.1 The Duke Transmission Provider shall make all reasonable efforts to preserve the confidentiality of information in accordance with the provisions of the Tariff, the requirements of (and/or agreements with) NERC, the requirements of (and/or agreements with) SERC or other applicable NERC region, the provisions of any agreements with the other Sponsors, and/or in accordance with any other contractual or legal confidentiality requirements.

14.5.2 Without limiting the applicability of Section 14.5.1, to the extent competitively sensitive and/or otherwise confidential information (other than information that is confidential solely due to its being CEII) is provided in the transmission planning process and is needed to participate in the transmission planning process and to replicate transmission planning studies, it will be made available to those Stakeholders who have executed the SERTP Non-CEII Confidentiality Agreement (which agreement is posted on the Regional Planning Website). Importantly, if information should prove to contain both competitively sensitive/otherwise confidential information and CEII, then the requirements of both Section 14.3 and Section 14.5 would apply.

14.5.3 Other transmission planning information shall be posted on the Regional Planning Website and may be password protected, as appropriate.

15. TRANSPARENCY

15.1 General**:** Through the Annual Transmission Planning Meetings and postings made on the Regional Planning Website, the Duke Transmission Provider will disclose to its Transmission Customers and other Stakeholders the basic criteria, assumptions, and data that underlie its transmission expansion plan, as well as information regarding the status of upgrades identified in the transmission plan. The process for notifying stakeholders of changes or updates in the data bases used for transmission planning shall be through the Annual Transmission Planning Meetings and/or by postings on the Regional Planning Website.

15.2 The Availability of the Basic Methodology, Criteria, and Process the Duke Transmission Provider Uses to Develop its Transmission Plan: In an effort to enable Stakeholders to replicate the results of the Duke Transmission Provider's transmission planning studies, and thereby reduce the incidences of after-the-fact disputes regarding whether transmission planning has been conducted in an unduly discriminatory fashion, the Duke Transmission Provider will provide the following information, or links thereto, on the Regional Planning Website:

15.2.1 The Electric Reliability Organization and Regional Entity reliability standards that the Duke Transmission Provider utilizes, and complies with, in performing transmission planning.

15.2.2 The Duke Transmission Provider's internal policies, criteria, and guidelines that it utilizes in performing transmission planning.

15.2.3 Software titles and version numbers that may be used to access and perform transmission analyses on the then-current posted data bases.

Any additional information necessary to replicate the results of the Duke Transmission Provider's planning studies will be provided in accordance with, and subject to, the CEII and confidentiality provisions specified in this Attachment N-1.

15.3 Additional Transmission Planning-Related Information: In an effort to facilitate the Stakeholders' understanding of the Transmission System, the Duke Transmission Provider will also post additional transmission planning-related information that it deems appropriate on the Regional Planning Website.

15.4 Additional Transmission Planning Business Practice Information: In an effort to facilitate the Stakeholders' understanding of the Business Practices related to Transmission Planning, the Duke Transmission Provider will also post the following information on the Regional Planning Website:

15.4.1 Means for contacting the Duke Transmission Provider.

15.4.2 Procedures for submittal of questions regarding transmission planning to the Duke Transmission Provider (in general, questions of a non-

immediate nature will be collected and addressed through the Annual Transmission Planning Meeting process).

15.4.3 Instructions for how Stakeholders may obtain transmission base cases and other underlying data used for transmission planning.

15.4.4 Means for Transmission Customers having Service Agreements for Network Integration Transmission Service to provide load and resource assumptions to the Duke Transmission Provider; provided that if there are specific means defined in a Transmission Customer's Service Agreement for Network Integration Transmission Service (NITSA), then the NITSA shall control.

15.4.5 Means for Transmission Customers having Long-Term Service Agreements for Point-To-Point Transmission Service to provide to the Duke Transmission Provider projections of their need for service over the planning horizon (including any potential rollover periods, if applicable), including transmission capacity, duration, receipt and delivery points, likely redirects, and resource assumptions; provided that if there are specific means defined in a Transmission Customer's Long-Term Transmission Service Agreement for Point-To-Point Transmission Service, then the Service Agreement shall control.

15.5 Transparency Provided Through the Annual Transmission Planning Meetings

15.5.1 The First RPSG Meeting and Interactive Training Session

15.5.1.1 An Interactive Training Session Regarding the Duke Transmission Provider's Transmission Planning Methodologies and Criteria: As discussed in (and subject to) Section 13.2.1, at the First RPSG Meeting and Interactive Training Session, the Duke Transmission Provider will, among other things, conduct an interactive, training and input session for the Stakeholders regarding the methodologies and criteria that the Duke Transmission Provider utilizes in conducting its transmission planning analyses. The purpose of these training and interactive sessions is to facilitate the Stakeholders' ability to replicate transmission planning study results to those of the Duke Transmission Provider.

15.5.1.2 Presentation and Explanation of Underlying Transmission Planning Study Methodologies: During the training session in the First RPSG Meeting and Interactive Training Session, the Duke Transmission Provider will present and explain its transmission study methodologies. While not all of the following methodologies may be addressed at any single

meeting, these presentations may include explanations of the methodologies for the following types of studies:

(1) Steady state thermal analysis.

(2) Steady state voltage analysis.

(3) Stability analysis.

(4) Short-circuit analysis.

(5) Nuclear plant off-site power requirements.

(6) Interface analysis (*i.e.*, import and export capability).

15.5.2 Presentation of Preliminary Modeling Assumptions: At the Annual Transmission Planning Summit, the Duke Transmission Provider will also provide to the Stakeholders its preliminary modeling assumptions for the development of the Duke Transmission Provider's following year's ten (10) year transmission expansion plan. This information will be made available on the Regional Planning Website, with CEII information being secured by password access. The preliminary modeling assumptions that will be provided may include:

15.5.2.1 Study case definitions, including load levels studied and planning horizon information.

15.5.2.2 Resource assumptions, including on-system and off-system supplies for current and future native load and network customer needs.

15.5.2.3 Planned resource retirements.

15.5.2.4 Renewable resources under consideration.

15.5.2.5 Demand side options under consideration.

15.5.2.6 Long-term firm transmission service agreements.

15.5.2.7 Current TRM and CBM values.

15.5.3 The Transmission Expansion Review and Input Process: The Annual Transmission Planning Meetings will provide an interactive process over a calendar year for the Stakeholders to receive information and updates, as well as to provide input, regarding the Duke Transmission Provider's development of its transmission expansion plan. This dynamic process will generally be provided as follows:

15.5.3.1 At the Annual Transmission Planning Summit and Assumptions Input Meeting, the Duke Transmission Provider will describe and explain to the Stakeholders the database assumptions for the ten (10) year transmission expansion plan that will be developed during the upcoming year. The Stakeholders will be allowed to provide input regarding the ten (10) year transmission expansion plan assumptions.

15.5.3.2 At the First RPSG Meeting and Interactive Training Session, the Duke Transmission Provider will provide interactive training to the Stakeholders regarding the underlying criteria and methodologies utilized to develop the transmission expansion plan. The databases utilized by the Duke Transmission Provider will be posted on the secured area of the Regional Planning Website.

15.5.3.3 To the extent that Stakeholders have transmission expansion plan/enhancement alternatives that they would like for the Duke Transmission Provider and other Sponsors to consider, the Stakeholders shall perform analysis prior to, and provide any such analysis at, the Preliminary Expansion Plan Meeting. At the Preliminary Expansion Plan Meeting, the Duke Transmission Provider will present its preliminary transmission expansion plan for the current ten (10) year planning horizon, including updates on the status of regional assessments being performed pursuant to Section 20. The Duke Transmission Provider and Stakeholders will engage in interactive expansion plan discussions regarding this preliminary analysis. This preliminary transmission expansion plan will be posted on the secure/CEII area of the Regional Planning Website at least 10 calendar days prior to the Preliminary Expansion Plan meeting.

15.5.3.4 The transmission expansion plan/enhancement alternatives suggested by the Stakeholders will be considered by the Duke Transmission Provider for possible inclusion in the transmission expansion plan. When evaluating such proposed alternatives, the Duke Transmission Provider will, from a transmission planning perspective, take into account factors such as, but not limited to, the proposed alternatives' impacts on reliability, relative economics, effectiveness of performance, impact on transmission service (and/or cost of transmission service) to other customers and on third-party systems, project feasibility/viability and lead time to install.

15.5.3.5 At the Second RPSG Meeting, the Duke Transmission Provider will report to the Stakeholders regarding the suggestions/alternatives suggested by the Stakeholders at the

Preliminary Expansion Plan Meeting. The then-current version of the transmission expansion plan will be posted on the secure/CEII area of the regional planning website at least 10 calendar days prior to the Second RPSG Meeting.

15.5.3.6 At the Annual Transmission Planning Summit, the ten (10) year transmission expansion plan that is intended to be implemented the following year will be presented to the Stakeholders along with the regional transmission plan for purposes of Order No. 1000. The Transmission Planning Summit presentations and the regional transmission plan, which is expected to include the ten (10) year transmission expansion plan will be posted on the Regional Planning Website at least 10 calendar days prior to the Annual Transmission Planning Summit.

15.5.4 Flowchart Diagramming the Steps of the SERTP Process: A flowchart diagramming the SERTP Process, as well as providing the general timelines and milestones for the performance of the activities described herein, is provided in Appendix 2.

16. INFORMATION EXCHANGE

To the extent that the information described in this Section 16 has not already been exchanged pursuant to the Companies' Local Planning Process described in Sections 2-10 herein, the Duke Transmission Provider may request that Transmission Customers and/or other interested parties provide additional information pursuant to this Section 16 in support of regional transmission planning pursuant to Sections 12-31 herein.

16.1 General: Transmission Customers having Service Agreements for Network Integration Transmission Service are required to submit information on their projected loads and resources on a comparable basis (*e.g.*, planning horizon and format) as used by transmission providers in planning for their native load. Transmission Customers having Service Agreements for Point-To-Point Transmission Service are required to submit any projections they have a need for service over the planning horizon and at what receipt and delivery points. Interconnection Customers having Interconnection Agreements under the Tariff are required to submit projected changes to their generating facility that could impact the Duke Transmission Provider's performance of transmission planning studies. The purpose of this information that is provided by each class of customers is to facilitate the Duke Transmission Provider's transmission planning process, with the September 1 due date of these data submissions by customers being timed to facilitate the Duke Transmission Provider's development of its databases and model building for the following year's ten (10) year transmission expansion plan.

16.2 Network Integration Transmission Service Customers: By September 1 of each

year, each Transmission Customer having Service Agreement[s] for Network Integration Transmission Service shall provide to the Duke Transmission Provider an annual update of that Transmission Customer's Network Load and Network Resource forecasts for the following ten (10) years consistent with those included in its Application for Network Integration Transmission Service under Part III of the Tariff.

16.3 Point-to-Point Transmission Service Customers: By September 1 of each year, each Transmission Customers having Service Agreement[s] for long-term Firm Point-To-Point Transmission Service shall provide to the Duke Transmission Provider usage projections for the term of service. Those projections shall include any projected redirects of that transmission service, and any projected resells or reassignments of the underlying transmission capacity. In addition, should the Transmission Customer have rollover rights associated with any such service agreement, the Transmission Customer shall also provide non-binding usage projections of any such rollover rights.

16.4 Demand Resource Projects: The Duke Transmission Provider expects that Transmission Customers having Service Agreements for Network Integration Transmission Service that have demand resource assets will appropriately reflect those assets in those customers' load projections. Should a Stakeholder have a demand resource asset that is not associated with such load projections that the Stakeholder would like to have considered for purposes of the transmission expansion plan, then the Stakeholder shall provide the necessary information *(e.g*. technical and operational characteristics, affected loads, cost, performance, lead time to install) in order for the Duke Transmission Provider to consider such demand response resource comparably with other alternatives. The Stakeholder shall provide this information to the Duke Transmission Provider by the Annual Transmission Planning Summit and Assumptions Input Meeting of the year prior to the implementation of the pertinent ten (10) year transmission expansion plan, and the Stakeholder should then continue to participate in this SERTP Process. To the extent similarly situated, the Duke Transmission Provider shall treat such Stakeholder submitted demand resource projects on a comparable basis for transmission planning purposes.

16.5 Interconnection Customers: By September 1 of each year, each Interconnection Customer having an Interconnection Agreement[s] under the Tariff shall provide to the Duke Transmission Provider annual updates of that Interconnection Customer's planned addition or upgrades (including status and expected in-service date), planned retirements, and environmental restrictions.

16.6 Notice of Material Change: Transmission Customers and Interconnection Customers shall provide the Duke Transmission Provider with timely written notice of material changes in any information previously provided related to any such customer's load, resources, or other aspects of its facilities, operations, or conditions of service materially affecting the Duke Transmission Provider's ability to provide transmission service or materially affecting the Transmission

System.

17. DISPUTE RESOLUTION[10]

17.1 Negotiation: Any substantive or procedural dispute between the Duke Transmission Provider and one or more Stakeholders (collectively, the "Parties") that arises from the Attachment N-1 transmission planning process generally shall be referred to a designated senior representative of the Duke Transmission Provider and a senior representative of the pertinent Stakeholder(s) for resolution on an informal basis as promptly as practicable. Should the dispute also involve one or more other Sponsors of this SERTP Process, then such entity(ies) shall have the right to be included in "Parties" for purposes of this Section and for purposes of that dispute, and any such entity shall also include a designated senior representative in the above discussed negotiations in an effort to resolve the dispute on an informal basis as promptly as practicable. In the event that the designated representatives are unable to resolve the dispute within thirty (30) days, or such other period as the Parties may unanimously agree upon, by unanimous agreement among the Parties such dispute may be voluntarily submitted to the use of the Commission's Alternative Means of Dispute Resolution (18 C.F.R. § 385.604, as those regulations may be amended from time to time), the Commission's Arbitration process (18 C.F.R. § 385.605, as those regulations may be amended from time to time) (collectively, "Commission ADR"), or such other dispute resolution process that the Parties may unanimously agree to utilize.

17.2 Use of Dispute Resolution Processes: In the event that the Parties voluntarily and unanimously agree to the use of a Commission ADR process or other dispute resolution procedure, then the Duke Transmission Provider will have a notice posted to this effect on the Regional Planning Website, and an e-mail notice in that regard will be sent to Registered Stakeholders. In addition to the Parties, all Stakeholders and Sponsors shall be eligible to participate in any Commission ADR process as "participants", as that or its successor term in meaning is used in 18 C.F.R. §§ 385.604, 385.605 as may be amended from time to time, for purposes of the Commission ADR process; provided, however, any such Stakeholder or Sponsor must first have provided written notice to the Duke Transmission Provider within thirty (30) calendar days of the posting on the Regional Planning Website of the Parties' notice of their intent to utilize a Commission ADR Process.

17.3 Costs: Each Party involved in a dispute resolution process hereunder, and each

[10] Any dispute, claim or controversy amongst Duke or Progress and/or a stakeholder regarding application of, or results from the local transmission planning process contained in Sections 2-11 herein (each a "Dispute") shall be resolved in accordance with the procedures set forth in Section 6 herein. Any procedural or substantive dispute that arises from the SERTP will be addressed by the regional Dispute Resolution Measures contained in this Section 17.

"participant" in a Commission ADR Process utilized in accordance with Section 17.2, shall be responsible for its own costs incurred during the dispute resolution process. Should additional costs be incurred during the dispute resolution process that are not directly attributable to a single Party/participant, then the Parties/participants shall each bear an equal share of such cost.

17.4 Rights under the Federal Power Act: Nothing in this Section 17 shall restrict the rights of any party to file a Complaint with the Commission under relevant provisions of the Federal Power Act.

18. REGIONAL ECONOMIC PLANNING STUDIES[11]

18.1 General - Economic Planning Study Requests: Stakeholders will be allowed to request that the Duke Transmission Provider perform up to five (5) Stakeholder requested economic planning studies (Economic Planning Studies) on an annual basis.

18.2 Parameters for the Economic Planning Studies: These Economic Planning Studies shall be confined to sensitivity requests for bulk power transfers and/or to evaluate potential upgrades or other investments on the Transmission System that could reduce congestion or integrate new resources. Bulk power transfers from one area to another area with the region encompassed by this SERTP Process (the "Region") shall also constitute valid requests. The operative theory for the Economic Planning Studies is for them to identify meaningful information regarding the requirements for moving large amounts of power beyond that currently feasible, whether such transfers are internal to the Region or from this Region to interconnected regions.

18.3 Other Tariff Studies: The Economic Planning Studies are not intended to replace System Impact Studies, Facility Studies, or any of the studies that are performed for transmission delivery service or interconnection service under the Tariff.

18.4 Clustering: The RPSG should consider clustering similar Economic Planning Study requests. In this regard, if two or more of the RPSG requests are similar in nature and the Duke Transmission Provider concludes that clustering of such requests and studies is appropriate, the Duke Transmission Provider may, following communications with the RPSG, cluster those studies for purposes of the transmission evaluation.

18.5 Additional Economic Planning Studies: Should a Stakeholder(s) request the performance of an Economic Planning Study in addition to the above-described five (5) Economic Planning Studies that the RPSG may request during a calendar year, then any such additional Economic Planning Study will only be performed if

[11] The economic planning studies undertaken pursuant to this Section 18 are regional. Local economic studies are undertaken pursuant to Section 4.2 herein.

such Stakeholder(s) first agrees to bear the Duke Transmission Provider's actual costs for doing so and the costs incurred by any other Sponsor to perform such Economic Planning Study, recognizing that the Duke Transmission Provider may only conduct a reasonable number of transmission planning studies per year. If affected by the request for such an additional Economic Planning Study, the Duke Transmission Provider will provide to the requesting Stakeholder(s) a non-binding but good faith estimate of what the Duke Transmission Provider expects its costs to be to perform the study prior to the Stakeholder(s) having to agree to bear those costs. Should the Stakeholder(s) decide to proceed with the additional study, then it shall pay the Duke Transmission Provider's and other affected Sponsor[s]' estimated study costs up-front, with those costs being trued-up to the Duke Transmission Provider's and other affected Sponsor[s]' actual costs upon the completion of the additional Economic Planning Study.

18.6 Economic Planning Study Process

18.6.1 Stakeholders will be prompted at the Annual Transmission Planning Summit to provide requests for the performance of Economic Planning Studies. Corresponding announcements will also be posted on the Regional Planning Website, and Registered Stakeholders will also receive e-mail notifications to provide such requests. An Economic Planning Study Request Form will be made available on the Regional Planning Website, and interested Stakeholders may submit any such completed request form on the non-secure area of the Regional Planning Website (unless such study request contains CEII, in which case the study request shall be provided to the Duke Transmission Provider with the CEII identified, and the study request shall then be posted on the secure area of the Regional Planning Website).

18.6.2 Prior to each First RPSG Meeting, the RPSG shall compile the Economic Planning Study requests. At the First RPSG Meeting, the RPSG shall meet to discuss and select up to five (5) Economic Planning Studies to be requested to be performed. At the First RPSG Meeting, the Duke Transmission Provider will coordinate with the RPSG and any interested Stakeholders to facilitate the RPSG's efforts regarding its development and selection of the Economic Planning Study requests. Once the RPSG selects the Economic Planning Study(ies) (up to five annually), the RPSG will notify the Duke Transmission Provider, who will post the results on the Regional Planning Website.

18.6.3 The Duke Transmission Provider will post on the secure area of the Regional Planning Website the study assumptions for the five (5) Economic Planning Studies within thirty (30) days of the postings of the selected Economic Planning Studies on the Regional Planning Website. Registered Stakeholders will receive an e-mail notification of this posting, and an announcement will also be posted on the Regional Planning Website.

18.6.4 Stakeholders will have thirty (30) calendar days from the Duke Transmission Provider's posting of the assumptions for the RPSG to provide comments regarding those assumptions. Any such comments shall be posted on the secure area of the Regional Planning Website if the comments concern CEII.

18.6.5 The preliminary results of the Economic Planning Studies will be presented at the Second RPSG Meeting. These results and related data will be posted on the secure area of the Regional Planning Website a minimum of 10 calendar days prior to the Second RPSG Meeting. The Second RPSG Meeting will be an interactive session with the RPSG and other interested Stakeholders in which the Duke Transmission Provider will explain the results, alternatives, methodology, criteria, and related considerations pertaining to those preliminary results. At that meeting, the Stakeholders may submit alternatives to the enhancement solutions identified in those preliminary results. All such alternatives must be submitted by Stakeholders within thirty (30) calendar days from the close of the Second RPSG Meeting. The Duke Transmission Provider will consider the alternatives provided by the Stakeholders.

18.6.6 The final results of the Economic Planning Studies will be presented at the Annual Transmission Planning Summit, and the Duke Transmission Provider will report regarding its consideration of the alternatives provided by Stakeholders. These final results will be posted on the secure area of the Regional Planning Website a minimum of 10 calendar days prior to the Transmission Planning Summit.

18.6.7 The final results of the Economic Planning Studies will be non-binding upon the Duke Transmission Provider and will provide general non-binding estimations of the required transmission upgrades, timing for their construction, and costs for completion.

19. CONSIDERATION OF TRANSMISSION NEEDS DRIVEN BY PUBLIC POLICY REQUIREMENTS

19.1 Procedures for the Consideration of Transmission Needs Driven by Public Policy Requirements: The Duke Transmission Provider addresses transmission needs driven by enacted state, federal and local laws and/or regulations (Public Policy Requirements) in its routine planning, design, construction, operation, and maintenance of the Transmission System.

19.2 The Consideration of Transmission Needs Driven by Public Policy Requirements Identified Through Stakeholder Input and Proposals

19.2.1 Requisite Information: In order for the Duke Transmission Provider to consider possible transmission needs driven by Public Policy Requirements that are proposed by a Stakeholder, the Stakeholder must

provide the following information in accordance with the submittal instructions provided on the Regional Planning Website:

19.2.1.1 The applicable Public Policy Requirement, which must be a requirement established by an enacted state, federal or local law(s) and/or regulation(s); and

19.2.1.2 An explanation of the possible transmission need(s) driven by the Public Policy Requirement identified in subsection (19.2.1.1) (*e.g.,* the situation or system condition for which possible solutions may be needed, as opposed to a specific transmission project).

19.2.2 Deadline for Providing Such Information: Stakeholders that propose a possible transmission need driven by a Public Policy Requirement for evaluation by the Duke Transmission Provider in the current transmission planning cycle must provide the requisite information identified in Section 19.2.1 to the Duke Transmission Provider no later than 60 calendar days after the SERTP Annual Transmission Planning Summit and Input Assumptions Meeting for the previous transmission planning cycle.

19.3 Duke Transmission Provider Evaluation of SERTP Stakeholder Input Regarding Possible Transmission Needs Driven by Public Policy Requirements

19.3.1 Identification of Public Policy-Driven Transmission Needs: In order to identify, out of the set of possible transmission needs driven by Public Policy Requirements proposed by Stakeholders, those transmission needs for which transmission solutions will be evaluated in the current planning cycle, the Duke Transmission Provider will assess:

19.3.1.1 Whether the Stakeholder-identified Public Policy Requirement is an enacted local, state, or federal law(s) and/or regulation(s);

19.3.1.2 Whether the Stakeholder-identified Public Policy Requirement drives a transmission need(s); and

19.3.1.3 If the answers to the foregoing questions 1) and 2) are affirmative, whether the transmission need(s) driven by the Public Policy Requirement is already addressed or otherwise being evaluated in the then-current planning cycle.

19.3.2 Identification and Evaluation of Possible Transmission Solutions for Public Policy-Driven Transmission Needs that Have Not Already Been Addressed: If a Public Policy-driven transmission need is identified that is not already addressed, or that is not already being evaluated in the transmission expansion planning process, the Duke Transmission Provider will identify a transmission solution(s) to address the

aforementioned need in the planning processes. The potential transmission solutions will be evaluated consistent with Section 20.

19.4 Stakeholder Input During the Evaluation of Public Policy-Driven Transmission Needs and Possible Transmission Solutions

19.4.1 Typically at the First RPSG Meeting and Interactive Training Session, but not later than the Preliminary Expansion Plan Meeting, for the given transmission planning cycle, the Duke Transmission Provider will review the Stakeholder-proposed transmission needs driven by Public Policy Requirements to be evaluated in the then-current planning cycle. Prior to the meeting at which transmission needs driven by Public Policy Requirements will be reviewed, the Duke Transmission Provider will identify, on the Regional Planning Website, which possible transmission needs driven by Public Policy Requirements proposed by Stakeholders (if any) are transmission needs(s) that are not already addressed in the planning process and will, pursuant to Sections 19.3.1 and 19.3.2, be addressed in the current planning cycle.

19.4.2 Stakeholders, including those who are not Transmission Customers, may provide input regarding Stakeholder-proposed possible transmission need(s) and may provide input during the evaluation of potential transmission solutions to identified transmission needs driven by Public Policy Requirements. Specifically with regard to the evaluation of such potential transmission solutions, a Stakeholder may provide input at the Preliminary Expansion Plan Meeting. If a Stakeholder has performed analysis regarding such a potential transmission solution, the Stakeholder may provide any such analysis at that time.

19.4.3 Stakeholder input regarding possible transmission needs driven by Public Policy Requirements may be directed to the governing Tariff process as appropriate. For example, if the possible transmission need identified by the Stakeholder is essentially a request by a network customer to integrate a new network resource, the request would be directed to that existing Tariff process.

19.5 Posting Requirement: The Duke Transmission Provider will provide and post on the Regional Planning Website an explanation of (1) those transmission needs driven by Public Policy Requirements that have been identified for evaluation for potential transmission projects in the then-current planning cycle; and (2) why other suggested, possible transmission needs driven by Public Policy Requirements proposed by Stakeholders were not selected for further evaluation.

20. REGIONAL ANALYSES OF POTENTIALLY MORE EFFICIENT OR COST EFFECTIVE TRANSMISSION SOLUTIONS

20.1 Regional Planning Analyses

20.1.1 During the course of each transmission planning cycle, the Duke Transmission Provider will conduct regional transmission analyses to assess if the then-current regional transmission plan addresses the Duke Transmission Provider's transmission needs, including those of its Transmission Customers and those which may be driven, in whole or in part, by economic considerations or Public Policy Requirements. This regional analysis will include assessing whether there may be more efficient or cost effective transmission projects to address transmission needs than transmission projects included in the latest regional transmission plan (including projects selected in a regional transmission plan for RCAP pursuant to Section 26).

20.1.2 The Duke Transmission Provider will perform power flow, dynamic, and short circuit analyses, as necessary, to assess whether the then-current regional transmission plan would provide for the physical transmission capacity required to address the Duke Transmission Provider's transmission needs, including those transmission needs of its Transmission Customers and those driven by economic considerations and Public Policy Requirements. Such analysis will also evaluate those potential transmission needs driven by Public Policy Requirements identified by Stakeholders pursuant to Section 19.3.1. If the Duke Transmission Provider determines that the on-going planning being performed for the then-current cycle would not provide sufficient physical transmission capacity to address a transmission need(s), the Duke Transmission Provider will identify potential transmission projects to address the transmission need(s).

20.2 Identification and Evaluation of More Efficient or Cost Effective Transmission Project Alternatives

20.2.1 The Duke Transmission Provider will look for potential regional transmission projects that may be more efficient or cost effective solutions to address transmission needs than transmission projects included in the latest regional transmission plan or otherwise under consideration in the then-current transmission planning process for the ten (10) year planning horizon. Consistent with Section 20.1, through power flow, dynamic, and short circuit analyses, as necessary, the Duke Transmission Provider will evaluate regional transmission projects identified to be potentially more efficient or cost effective solutions to address transmission needs, including those transmission alternatives proposed by Stakeholders pursuant to Section 15.5.3.3 and transmission projects proposed for RCAP pursuant to Section 25. The evaluation of transmission projects in these regional assessments throughout the then-current planning cycle will be based upon their effectiveness in addressing transmission needs, including those driven by Public Policy Requirements, reliability and/or economic considerations. Such analysis will be in accordance with, and subject to (among other things), state

law pertaining to transmission ownership, siting, and construction. In assessing whether transmission alternatives are more efficient and/or cost effective transmission solutions, the Duke Transmission Provider shall consider factors such as, but not limited to, a transmission project's:

20.2.1.1 Impact on reliability.

20.2.1.2 Feasibility, including the viability of constructing and tying in the proposed project by the required in-service date.

20.2.1.3 Relative transmission cost, as compared to other transmission project alternatives to reliably address transmission needs.

20.2.1.4 Ability to reduce real power transmission losses on the transmission system(s) within the SERTP region, as compared to other transmission project alternatives to reliably address transmission needs.

20.2.2 Stakeholder Input: Stakeholders may provide input on potential transmission alternatives for the Duke Transmission Provider to consider throughout the SERTP planning process for each planning cycle in accordance with Section 15.5.3.

21. MERCHANT TRANSMISSION DEVELOPERS PROPOSING TRANSMISSION FACILITIES IMPACTING THE SERTP:

Merchant transmission developers not seeking regional cost allocation pursuant to Sections 25-31 (Merchant Transmission Developers) who propose to develop a transmission project(s) potentially impacting the Transmission System and/or transmission system(s) within the SERTP region shall provide information and data necessary for the Duke Transmission Provider to assess the potential reliability and operational impacts of those proposed transmission facilities. That information should include:

- Transmission project timing, scope, network terminations, load flow data, stability data, HVDC data (as applicable), and other technical data necessary to assess potential impacts.

22. ENROLLMENT

22.1 General Eligibility for Enrollment: A public utility or non-public utility transmission service provider and/or transmission owner who is registered with NERC as a Transmission Owner or a Transmission Service Provider may enroll in the SERTP. Such Transmission Service Providers and Transmission Owners are thus potential Beneficiaries for cost allocation purposes on behalf of their transmission customers. Entities that do not enroll will nevertheless be permitted to participate as Stakeholders in the SERTP.

22.2 Enrollment Requirement In Order to Seek Regional Cost Allocation: While

enrollment is not generally required in order for a transmission developer to be eligible to propose a transmission project for evaluation and potential selection in a regional transmission plan for RCAP pursuant to Sections 25-31, a potential transmission developer must enroll in the SERTP in order to be eligible to propose a transmission project for potential selection in a regional transmission plan for RCAP if it, an affiliate, subsidiary, member, owner or parent company has load in the SERTP.

22.3 Means to Enroll: Entities that satisfy the general eligibility requirements of Section 22.1 or are required to enroll in accordance with Section 22.2 may provide an application to enroll by submitting the form of enrollment posted on the Regional Planning Website.

22.4 List of Enrollees in the SERTP: Attachment N-3 provides the list of the entities who have enrolled in the SERTP in accordance with the foregoing provisions (Enrollees). Attachment N-3 is effective as of the effective date of the tariff record (and subject to Section 22.5, below) that contains Attachment N-3. In the event a non-public utility listed in Attachment N-3 provides the Duke Transmission Provider with notice that it chooses not to enroll in, or is withdrawing from, the SERTP pursuant to Section 22.5 or Section 22.6, as applicable, such action shall be effective as of the date prescribed in accordance with that respective Section. In such an event, the Duke Transmission Provider shall file revisions to the lists of Enrollees in Attachment N-3 within fifteen business days of such notice. The effective date of any such revised tariff record shall be the effective date of the non-public utility's election to not enroll or to withdraw as provided in Section 22.5 or 22.6, as applicable.

22.5 Enrollment, Conditions Precedent, Conditions Subsequent, and Cost Allocation Responsibility: Enrollment will subject Enrollees to cost allocation if, during the period in which they are enrolled, it is determined in accordance with this Attachment N-1 that the Enrollee is a Beneficiary of a transmission project(s) selected in the regional transmission plan for RCAP; subject to the following:

22.5.1 Upon Order on Compliance Filing: The initial non-public utilities that satisfy the general eligibility requirements of 22.1 and who have made the decision to enroll at the time of the Duke Transmission Provider's compliance filing in response to FERC's July 18, 2013 Order on Compliance Filings in Docket Nos. ER13-897, ER13-908, and ER13-913, 144 FERC ¶ 61,054, do so on the condition precedent that the Commission accepts: i) that compliance filing without modification and without setting it for hearing or suspension and ii) the Duke Transmission Provider's July 10, 2013 compliance filing made in Docket Nos. ER13-1928, ER13-1930, ER13-1940, and ER13-1941 without modification and without setting it for hearing or suspension. Should the Commission take any such action upon review of such compliance filings or in any way otherwise modify, alter, or impose amendments to this Attachment N-1, then each such non-public utility shall be under no

obligation to enroll in the SERTP and shall have sixty (60) days following such an order or action to provide written notice to the Duke Transmission Provider of whether it will, in fact, enroll in the SERTP. If, in that event, such non-public utility gives notice to the Duke Transmission Provider that it will not enroll, such non-public utility shall not be subject to cost allocation under this Attachment N-1 (unless it enrolls at a later date).

22.5.2 Upon Future Regulatory Action: Notwithstanding anything herein to the contrary, should the Commission, a Court, or any other governmental entity having the requisite authority modify, alter, or impose amendments to this Attachment N-1, then an enrolled non-public utility may immediately withdraw from this Attachment N-1 by providing written notice within sixty (60) days of that order or action, with the non-public utility's termination being effective as of the close of business the prior business day before said modification, alteration, or amendment occurred (although if the Commission has not acted by that prior business day upon both of the compliance filings identified in Section 22.5.1, then the non-public utility shall never have been deemed to have enrolled in the SERTP). In the event of such a withdrawal due to such a future regulatory and/or judicial action, the withdrawing Enrollee will be subject to cost allocations, if any, that were determined in accordance with this Attachment N-1 during the period in which it was enrolled and that determined that the withdrawing Enrollee would be a Beneficiary of new transmission projects selected in the regional transmission plan for RCAP.

22.6 Notification of Withdrawal: An Enrollee choosing to withdraw its enrollment in the SERTP may do so by providing written notification of such intent to the Duke Transmission Provider. Except for non-public utilities electing to not enroll or withdraw pursuant to Section 22.5, a non-public utility Enrollee's withdrawal shall be effective as of the date the notice of withdrawal is provided to the Duke Transmission Provider pursuant to this Section 22.6. For public utility Enrollees, the withdrawal shall be effective at the end of the then-current transmission planning cycle provided that the notification of withdrawal is provided to the Duke Transmission Provider at least sixty (60) days prior to the Annual Transmission Planning Summit and Assumptions Input Meeting for that transmission planning cycle.

22.7 Cost Allocation After Withdrawal: Any withdrawing Enrollee will not be allocated costs for transmission projects selected in a regional transmission plan for RCAP after its termination of enrollment becomes effective in accordance with the provisions of Section 22.5 or Section 22.6. However, the withdrawing Enrollee will be subject to cost allocations determined in accordance with this Attachment N-1 during the period it was enrolled, if any, for which the Enrollee was identified as a Beneficiary of new transmission projects selected in the regional transmission plan for RCAP.

23. PRE-QUALIFICATION CRITERIA FOR A TRANSMISSION DEVELOPER TO BE ELIGIBLE TO SUBMIT A REGIONAL TRANSMISSION PROJECT PROPOSAL FOR POTENTIAL SELECTION IN A REGIONAL TRANSMISSION PLAN FOR RCAP

23.1 Transmission Developer Pre-Qualification Criteria: In order to be eligible to propose a transmission project (that the transmission developer intends to develop) for consideration for selection in a regional transmission plan for RCAP in the upcoming planning cycle, a transmission developer (including the Duke Transmission Provider and nonincumbents) or a parent company (as defined in Section 23.1.2.2 below), as applicable, must submit a pre-qualification application by August 1st of the then-current planning cycle. To demonstrate that the transmission developer will be able to satisfy the minimum financial capability and technical expertise requirements, the pre-qualification application must provide the following:

23.1.1 A non-refundable administrative fee of $25,000 to off-set the cost to review, process, and evaluate the transmission developer's pre-qualification application;

23.1.2 Demonstration that at least one of the following criteria is satisfied:

23.1.2.1 The transmission developer must have and maintain a Credit Rating (defined below) of BBB- or better from Standard & Poor's Financial Services LLC, a part of McGraw Hill Financial (S&P), a Credit Rating of Baa3 or better from Moody's Investors Service, Inc. (Moody's) and/or a Credit Rating of BBB- or better from Fitch Ratings, Inc. (Fitch, collectively with S&P and Moody's and/or their successors, the "Rating Agencies") and not have or obtain less than any such Credit Rating by S&P, Moody's or Fitch. The senior unsecured debt (or similar) rating for the relevant entity from the Rating Agencies will be considered the "Credit Rating". In the event of multiple Credit Ratings from one Rating Agency or Credit Ratings from more than one Rating Agency, the lowest of those Credit Ratings will be used by the Duke Transmission Provider for its evaluation. However, if such a senior unsecured debt (or similar) rating is unavailable, the Duke Transmission Provider will consider Rating Agencies' issuer (or similar) ratings as the Credit Rating.

23.1.2.2 If a transmission developer does not have a Credit Rating from S&P, Moody's or Fitch, it shall be considered "Unrated", and an Unrated transmission developer's parent company or the entity that plans to create a new subsidiary that will be the transmission developer (both hereinafter "parent company") must have and maintain a Credit Rating of BBB- or better from

S&P, Baa3 or better from Moody's and/or BBB- or better from Fitch, not have or obtain less than any such Credit Rating by S&P, Moody's or Fitch, and the parent company must commit in writing to provide an acceptable guaranty to the Duke Transmission Provider meeting the requirements of Section 31 for the transmission developer if a proposed transmission project is selected in a regional transmission plan for RCAP. If there is more than one parent company, the parent company(ies) committing to provide the guaranty must meet the requirements set forth herein.

23.1.2.3 For an Unrated transmission developer, unless its parent company satisfies the requirements under B. above, such transmission developer must have and maintain a Rating Equivalent (defined below) of BBB- or better. Upon an Unrated transmission developer's request, a credit rating will be determined for such Unrated transmission developer comparable to a Rating Agency credit rating (Rating Equivalent) based upon the process outlined below:

(1) Each Unrated transmission developer will be required to pay a non-refundable annual fee of $15,000.00 for its credit to be evaluated/reevaluated on an annual basis.

(2) Upon request by the Duke Transmission Provider, an Unrated transmission developer must submit to the Duke Transmission Provider for the determination of a Rating Equivalent, and not less than annually thereafter, the following information with respect to the transmission developer, as applicable:

(A) financial statements (audited if available) for each completed fiscal quarter of the then current fiscal year including the most recent fiscal quarter, as well as the most recent three (3) fiscal years;

(i) For Unrated transmission developers with publicly-traded stock, this information must include:

(a) Annual reports on Form 10-K (or successor form) for the three (3) fiscal years most recently ended, and quarterly reports on Form 10-Q (or successor form) for each completed quarter of the then current fiscal

year, together with any amendments thereto, and

(b) Form 8-K (or successor form) reports disclosing material changes, if any, that have been filed since the most recent Form 10-K (or successor form), if applicable;

(ii) For Unrated transmission developers that are privately held, this information must include:

(a) Financial Statements, including balance sheets, income statements, statement of cash flows, and statement of stockholder's equity,

(b) Report of Independent Accountants,

(c) Management's Discussion and Analysis, and

(d) Notes to financial statements;

(B) its Standard Industrial Classification and North American Industry Classification System codes;

(C) at least one (1) bank and three (3) acceptable trade references;

(D) information as to any material litigation, commitments or contingencies as well as any prior bankruptcy declarations or material defaults or defalcations by, against or involving the transmission developer or its predecessors, subsidiaries or affiliates, if any;

(E) information as to the ability to recover investment in and return on its projects;

(F) information as to the financial protections afforded to unsecured creditors contained in its contracts and other legal documents related to its formation and governance;

(G) information as to the number and composition of its members or customers;

(H) its exposure to price and market risk;

(I) information as to the scope and nature of its business; and

(J) any additional information, materials and documentation which such Unrated transmission developer deems relevant evidencing such Unrated transmission developer's financial capability to develop, construct, operate and maintain transmission developer's projects for the life of the projects.

(3) The Duke Transmission Provider will notify an Unrated transmission developer after the determination of its Rating Equivalent. Upon request, the Duke Transmission Provider will provide the Unrated transmission developer with information regarding the procedures, products and/or tools used to determine such Rating Equivalent (*e.g.*, Moody's RiskCalc™ or other product or tool, if used).

(4) An Unrated transmission developer desiring an explanation of its Rating Equivalent must request such an explanation in writing within five (5) business days of receiving its Rating Equivalent. The Duke Transmission Provider will respond within fifteen (15) business days of receipt of such request with a summary of the analysis supporting the Rating Equivalent decision.

23.1.3 Evidence that the transmission developer has the capability to develop, construct, operate, and maintain significant U.S. electric transmission projects. The transmission developer should provide, at a minimum, the following information about the transmission developer. If the transmission developer is relying on the experience or technical expertise of its parent company or affiliate(s) to meet the requirements of this subsection 3, the following information should be provided about the transmission developer's parent company and its affiliates, as applicable:

23.1.3.1 Information regarding the transmission developer's or other relevant experience regarding transmission projects in-service, under construction, and/or abandoned or otherwise not completed including locations, operating voltages, mileages, development schedules, and approximate installed costs; whether delays in project completion were encountered; and how these facilities are owned, operated and maintained;

23.1.3.2 Evidence demonstrating the ability to address and timely remedy failure of transmission facilities;

23.1.3.3 Violations of NERC and/or Regional Entity reliability standard(s) and/or violations of regulatory requirement(s) that have been made public pertaining to the development, construction, ownership, operation, and/or maintenance of electric transmission infrastructure facilities (provided that violations of CIP standards are not required to be identified), and, if so, an explanation of such violations; and

23.1.3.4 A description of the experience of the transmission developer in acquiring rights of way.

23.1.4 Evidence of how long the transmission developer and its parent company, if relevant, have been in existence.

23.2 Review of Pre-Qualification Applications: No later than November 1st of the then-current planning cycle, the Duke Transmission Provider will notify transmission developers that submitted pre-qualification applications or updated information by August 1st, whether they have pre-qualified as eligible to propose a transmission project for consideration for selection in a regional transmission plan for RCAP in the upcoming planning cycle. A list of transmission developers that have pre-qualified for the upcoming planning cycle will be posted on the Regional Planning Website.

23.3 Opportunity for Cure for Pre-Qualification Applications: If a transmission developer does not meet the pre-qualification criteria or provides an incomplete application, then following notification by the Duke Transmission Provider, the transmission developer will have 15 calendar days to resubmit the necessary supporting documentation to remedy the identified deficiency. The Duke Transmission Provider will notify the transmission developer, whether they are, or will continue to be, pre-qualified within 30 calendar days of the resubmittal, provided that the Duke Transmission Provider shall not be required to provide such a response prior to November 1st of the then-current planning cycle.

23.4 Pre-Qualification Renewal: If a transmission developer is pre-qualified as eligible to propose a transmission project for consideration for selection in a regional transmission plan for RCAP in the then-current planning cycle, such transmission developer may not be required to re-submit information to pre-qualify with respect to the upcoming planning cycle. In the event any information on which the entity's pre-qualification is based has changed, such entity must submit all updated information by the August 1st deadline. In addition, all transmission developers must submit a full pre-qualification application once every 3 years.

23.5 Enrollment Requirement to Pre-Qualify as Eligible to Propose a Transmission Project for Potential Selection in a Regional Transmission Plan for RCAP: If a

transmission developer or its parent company or owner or any affiliate, member or subsidiary has load in the SERTP region, the transmission developer must have enrolled in the SERTP in accordance with Section 22.2 to be eligible to pre-qualify to propose a transmission project for potential selection in a regional transmission plan for RCAP.

24. TRANSMISSION PROJECTS POTENTIALLY ELIGIBLE FOR SELECTION IN A REGIONAL TRANSMISSION PLAN FOR RCAP:

24.1 In order for a transmission project proposed by a transmission developer, whether incumbent or non-incumbent, to be considered for evaluation and potential selection in a regional transmission plan for RCAP, the project must be regional in nature in that it must be a transmission project effectuating significant bulk electric transfers across the SERTP region and addressing significant electrical needs in that it:

24.1.1 operates at a voltage of 300 kV or greater;

24.1.2 is a transmission line located in the SERTP region; and

24.1.3 spans at least 50 miles.

24.2 In addition to satisfying the requirements of Section 24.1, the proposed regional transmission project must not contravene state or local laws with regard to rights-of-way or construction of transmission facilities. The proposed transmission project also cannot be an upgrade to an existing facility. A transmission upgrade includes any expansion, partial replacement, or modification, for any purpose, made to existing transmission facilities, including, but not limited to:

24.2.1 transmission line reconductors;

24.2.2 the addition, modification, and/or replacement of transmission line structures and equipment;

24.2.3 increasing the nominal operating voltage of a transmission line;

24.2.4 the addition, replacement, and/or reconfiguration of facilities within an existing substation site;

24.2.5 the interconnection/addition of new terminal equipment onto existing transmission lines.

For purposes of clarification, a transmission project proposed for potential selection in a regional transmission plan for RCAP may rely on the implementation of one or more transmission upgrades (as defined above) by the Impacted Utilities in order to reliably implement the proposed transmission project.

24.3 In order for the proposed transmission project to be a more efficient or cost effective alternative to the transmission projects identified by the transmission providers through their planning processes, it should be materially different than projects already under consideration in the expansion planning process. A project will be deemed materially different, as compared to another transmission alternative(s) under consideration, if the proposal consists of significant geographical or electrical differences in the alternative's proposed interconnection point(s) or transmission line routing. Should the proposed transmission project be deemed not materially different than projects already under consideration in the transmission expansion planning process, the Duke Transmission Provider will provide a sufficiently detailed explanation on the Regional Planning Website for Stakeholders to understand why such determination was made.

25. SUBMISSION OF PROPOSALS FOR POTENTIAL SELECTION IN A REGIONAL TRANSMISSION PLAN FOR RCAP

Any entity may propose a transmission project for consideration by the Duke Transmission Provider for potential selection in a regional transmission plan for RCAP.[12] An entity that wants to propose a transmission project for potential selection in a regional transmission plan for RCAP but does not intend to develop the transmission project may propose such transmission project in accordance with Section 25.6.

25.1 Materials to be Submitted: In order for a transmission project to be considered for RCAP, a pre-qualified transmission developer proposing the transmission project (including an incumbent or nonincumbent transmission developer) must provide to the Duke Transmission Provider the following information:

25.1.1 Sufficient information for the Duke Transmission Provider to determine that the potential transmission project satisfies the regional eligibility requirements of Section 24;

25.1.2 A description of the proposed transmission project that details the intended scope (including the various stages of the project development such as engineering, ROW acquisition, construction, recommended in-service date, etc.);

25.1.3 A capital cost estimate of the proposed transmission project. If the cost estimate differs greatly from generally accepted estimates of projects of comparable scope, the transmission developer may be asked to support such differences with supplemental information;

[12] The regional cost allocation process provided hereunder in accordance with Sections 25-31 does not limit the ability of the Duke Transmission Provider and other entities to negotiate alternative cost sharing arrangements voluntarily and separately from this regional cost allocation method.

25.1.4 Data and/or files necessary to appropriately model the proposed transmission project;

25.1.5 Documentation of the specific transmission need(s) that the proposed transmission project is intended to address. This documentation should include a description of the transmission need(s), timing of the transmission need(s), and may include, the technical analysis performed to support that the proposed transmission project addresses the specified transmission need(s);

25.1.6 A description of why the proposed transmission project is expected to be more efficient or cost effective than other transmission projects included in the then-current regional transmission plan. If available, and to facilitate the evaluation of the proposal and to mitigate the potential for disputes, the entity proposing the project for potential selection in a regional transmission plan for RCAP may submit documentation of detailed technical analyses performed that supports the position that the proposed transmission project addresses the specified transmission needs more efficiently or cost-effectively. Such optional documentation could include the following:

25.1.6.1 Transmission projects in the latest transmission expansion plan or regional transmission plan that would be displaced by the proposed project,

25.1.6.2 Any additional projects that may be required in order to implement the proposed project, or

25.1.6.3 Any reduction/increase in real-power transmission system losses;

25.1.7 The transmission developer must provide a reasonable explanation of, as it pertains to its proposed project, its planned approach to satisfy applicable regulatory requirements and its planned approach to obtain requisite authorizations necessary to acquire rights of way and to construct, operate, and maintain the proposed facility in the relevant jurisdictions;

25.1.7.1 The transmission developer should not expect to use the Duke Transmission Provider's right of eminent domain for ROW acquisition;

25.1.8 How the transmission developer intends to comply with all applicable standards and obtain the appropriate NERC certifications,

25.1.8.1 If it or a parent, owner, affiliate, or member who will be performing work in connection with the potential transmission project is registered with NERC or other industry organizations

pertaining to electric reliability and/or the development, construction, ownership, or operation, and/or maintenance of electric infrastructure facilities, a list of those registrations;

25.1.9 The experience of the transmission developer specific to developing, constructing, maintaining, and operating the type of transmission facilities contained in the transmission project proposed for potential selection in a regional transmission plan for RCAP,

25.1.9.1 Including verifiable past achievements of containing costs and adhering to construction schedules for transmission projects of similar size and scope as the proposed transmission project, and

25.1.9.2 Including a description of emergency response and restoration of damaged equipment capability

25.1.10 The planned or proposed project implementation management teams and the types of resources, including relevant capability and experience, contemplated for use in the development and construction of the proposed project;

25.1.11 A written commitment to comply with all applicable standards, including Good Utility Practices, governing the engineering, design, construction, operation, and maintenance of transmission projects in the SERTP region; and

25.1.12 Evidence of the ability of the transmission developer, its affiliate, partner or parent company to secure a financial commitment from an approved financial institution(s) agreeing to finance the construction, operation, and maintenance of the transmission project if selected in a regional transmission plan for RCAP.

25.2 Administrative Fee: An administrative fee of $25,000 to off-set the costs to review, process and evaluate each transmission project proposal. A refund of $15,000 will be provided to the transmission developer if:

25.2.1 The proposal is determined to not satisfy the qualification criteria in Section 25.1; or

25.2.2 The transmission developer withdraws its proposal by providing written notification of its intention to do so to the Duke Transmission Provider prior to the First RPSG Meeting and Interactive Training Session for that transmission planning cycle.

25.3 Deadline for Transmission Developer Submittals: In order for its transmission project to be considered for RCAP in the current transmission planning cycle, a transmission developer must provide the requisite information and payment

identified in Sections 25.1-25.2 to the Duke Transmission Provider in accordance with the submittal instructions provided on the Regional Planning Website no later than 60 calendar days after the SERTP Annual Transmission Planning Summit and Input Assumptions Meeting for the previous transmission planning cycle.

25.4 Initial Review of Submittal and Opportunity for Cure: The Duke Transmission Provider will notify transmission developers who propose a transmission project for potential selection in a regional transmission plan for RCAP whose submittals do not meet the requirements specified in Sections 25.1-25.2, or who provide an incomplete submittal, within 45 calendar days of the submittal deadline to allow the transmission developer an opportunity to remedy any identified deficiency(ies). Transmission developers, so notified, will have 15 calendar days to resubmit the necessary supporting documentation to remedy the identified deficiency. The Duke Transmission Provider will notify the transmission developer, whether they have adequately remedied the deficiency within 30 calendar days of the resubmittal. Should the deficiency(ies) remain unremedied, then the transmission project will not be considered for RCAP.

25.5 Change in the Qualification Information or Circumstances:

25.5.1 The transmission developer proposing a transmission project for potential selection in a regional transmission plan for RCAP has an obligation to update and report in writing to the Duke Transmission Provider any change to its or its parent company's information that was provided as the basis for its satisfying the requirements of Sections 23 through 31, except that the transmission developer is not expected to update its technical analysis performed for purposes of Section 25.1.6 to reflect updated transmission planning data as the transmission planning cycle(s) progresses.

25.5.2 The transmission developer must inform the Duke Transmission Provider of the occurrence of any of the developments described in (1) or (2) below should the following apply (and within the prescribed time period): (i) within five (5) business days of the occurrence if the transmission developer has a pre-qualification application pending as of the date of the occurrence; (ii) upon the submission of a renewal request for pre-qualification should the development have occurred since the transmission developer was pre-qualified; (iii) prior to, or as part of, proposing a transmission project for potential selection in a regional transmission plan for RCAP pursuant to Section 25.1 should the development have occurred since the transmission developer was pre-qualified; and (iv) within five (5) business days of the occurrence if the transmission developer has a transmission project either selected or under consideration for selection in a regional transmission plan for RCAP. These notification requirements are applicable upon the occurrence of any of the following:

25.5.2.1 the existence of any material new or ongoing investigations against the transmission developer by the Commission, the Securities and Exchange Commission, or any other governing, regulatory, or standards body that has been or was required to be made public; if its parent company has been relied upon to meet the requirements of Section 23.1.2 or Section 31, such information must be provided for the parent company and, in any event, with respect to any affiliate that is a transmitting utility; and

25.5.2.2 any event or occurrence which could constitute a material adverse change in the transmission developer's (and, if the parent company has been relied upon to meet the requirements of Section 23.1.2 or Section 31, the parent company's) financial condition (Material Adverse Change) such as:

(1) A downgrade or suspension of any debt or issuer rating by any Rating Agency,

(2) Being placed on a credit watch with negative implications (or similar) by any Rating Agency,

(3) A bankruptcy filing or material default or defalcation,

(4) Insolvency,

(5) A quarterly or annual loss or a decline in earnings of twenty-five percent (25%) or more compared to the comparable year-ago period,

(6) Restatement of any prior financial statements, or

(7) Any government investigation or the filing of a lawsuit that reasonably would be expected to adversely impact any current or future financial results by twenty-five percent (25%) or more.

25.5.3 If at any time the Duke Transmission Provider concludes that a transmission developer or a potential transmission project proposed for possible selection in a regional transmission plan for RCAP no longer satisfies such requirements specified in Sections 23-25, then the Duke Transmission Provider will so notify the transmission developer or entity who will have fifteen (15) calendar days to cure. If the transmission developer does not meet the fifteen (15) day deadline to cure, or if the Duke Transmission Provider determines that the transmission developer continues to no longer satisfy the requirements specified in Sections 23-25 despite the transmission developer's efforts to cure, then the Duke Transmission Provider may, without limiting its

other rights and remedies, immediately remove the transmission developer's potential transmission project(s) from consideration for potential selection in a regional transmission plan for RCAP and, if previously selected, from being selected in a regional transmission plan for RCAP, as applicable.

25.6 Projects Proposed for RCAP Where the Entity Making the Proposal Does Not Intend to be the Developer of the Project: Any Stakeholder may propose a potentially more cost effective or efficient transmission project for consideration in the transmission planning process in accordance with Section 15.5.3, and nothing herein limits the ability of a Stakeholder and other entities to negotiate alternative transmission development arrangements voluntarily and separately from the processes provided in this Attachment N-1. Should an entity propose a transmission project for potential selection in a regional transmission plan for RCAP but not intend to develop the project, then the following applies. Such an entity must submit the information required by Sections 25.1.1, 25.1.5, and 25.1.6 for a regional transmission project eligible for potential selection in a regional transmission plan for RCAP within the sixty (60) day window established in 25.3. Provided that the proposal complies with those requirements, the Duke Transmission Provider will make information describing the proposal available on the Regional Planning Website. The entity proposing the transmission project should coordinate with a transmission developer (either incumbent or nonincumbent) to have the developer submit the remaining information and materials required by Section 25. A pre-qualified transmission developer, should it decide to proceed, must submit the materials required by Section 25 within the sixty (60) day window established in Section 25.3 in order for the proposed transmission project to be considered for selection in a regional transmission plan for RCAP. If such a transmission project has not been so submitted within the sixty (60) day window established in Section 25.3, then the Duke Transmission Provider may treat the project as a Stakeholder-proposed transmission project alternative pursuant to Section 15.5.3. Furthermore, should the Duke Transmission Provider identify in the regional transmission planning process a regional transmission project that is selected in the regional transmission plan for RCAP that does not have a transmission developer that intends or is able to develop the project, the Duke Transmission Provider will identify such project on the Regional Planning Website. A prequalified transmission developer that desires to develop the project, whether incumbent or non-incumbent, may then propose the transmission project, pursuant to Sections 24 and 25, as the intended transmission developer for the project's on-going consideration in a regional transmission plan for RCAP.

26. EVALUATION AND POTENTIAL SELECTION OF PROPOSALS FOR SELECTION IN A REGIONAL TRANSMISSION PLAN FOR RCAP

26.1 Potential Transmission Projects Seeking RCAP Will be Evaluated in the Normal Course of the Transmission Planning Process: During the course of the then-current transmission expansion planning cycle (and thereby in conjunction with

other system enhancements under consideration in the transmission planning process), the Duke Transmission Provider will evaluate current transmission needs and assess alternatives to address current needs including the potential transmission projects proposed for possible selection in a regional transmission plan for RCAP by transmission developers consistent with the regional evaluation process described in Section 20. Such evaluation will be in accordance with, and subject to (among other things), state law pertaining to transmission ownership, siting, and construction. Utilizing coordinated models and assumptions, the Duke Transmission Provider will perform analyses, including power flow, dynamic, and short circuit analyses, as necessary and, applying its planning guidelines and criteria to evaluate submittals, determine whether, throughout the ten (10) year planning horizon:

26.1.1 The proposed transmission project addresses an underlying transmission need(s);

26.1.2 The proposed transmission project addresses transmission needs that are currently being addressed with projects in the transmission planning process and if so, which projects could be displaced (consistent with the reevaluation of the projects included in a regional transmission plan as described in Section 28) by the proposed transmission project, including;

26.1.2.1 transmission projects in the Duke Transmission Provider's ten year transmission expansion plan,

26.1.2.2 transmission projects in the regional transmission plan, including those currently under consideration and/or selected for RCAP;

26.1.3 The proposed transmission project addresses a transmission need(s) for which no transmission project is currently included in the latest ten (10) year expansion plans and/or regional transmission plan. If so, the Duke Transmission Provider will identify an alternative transmission project(s) which would be required to fully and appropriately address the same transmission need(s) (*e.g.*, otherwise considered to be the more efficient or cost effective transmission alternative). The Duke Transmission Provider will identify and evaluate such an alternative transmission project(s) consistent with the processes described in Sections 1 to 11 and 20;

26.1.4 Any additional projects that would be required to implement the proposed transmission project;

26.1.5 The proposed transmission project reduces and/or increases real power transmission losses on the transmission system within the SERTP region.

Previous analysis may be used, either in part or in whole, if applicable to the evaluation of the proposed regional transmission project. Stakeholders may provide input into the evaluation of RCAP proposals throughout the SERTP process consistent with Section 15.5.3

26.2 Transmission Benefit-to-Cost Analysis Based Upon Planning Level Cost Estimates

26.2.1 Based upon the evaluation outlined in Section 26.1, the Duke Transmission Provider will assess whether the transmission developer's transmission project proposed for potential selection in a regional transmission plan for RCAP is considered at that point in time to yield meaningful, net regional benefits. Specifically, the proposed transmission project should yield a regional transmission benefit-to-cost ratio of at least 1.25 and no individual Impacted Utility should incur increased, unmitigated transmission costs.[13]

26.2.1.1 The benefit used in this calculation for purposes of assessing the transmission developer's proposed transmission project will be quantified by the Beneficiaries' total cost savings in the SERTP region associated with:

(1) All transmission projects in the ten (10) year transmission expansion plan which would be displaced, as identified pursuant to Section 26.1;

(2) All regional transmission projects included in the regional transmission plan which would be displaced, as identified pursuant to Section 26.1 and to the extent no overlap exists with those transmission projects identified as displaceable in the Duke Transmission Provider's ten (10) year transmission expansion plan. This includes transmission projects currently selected in the regional transmission plan for RCAP; and

(3) All alternative transmission project(s), as determined pursuant to Section 26.1 that would be required in lieu of the proposed regional transmission project, if the proposed regional transmission project addresses a

[13] An entity would incur increased, unmitigated transmission costs should it incur more costs than displaced benefits and not be compensated/made whole for those additional costs. For purposes of this Attachment N-1, the terms "Impacted Utilities" shall mean: i) the Beneficiaries identified in the evaluation of the proposed transmission project and ii) any entity identified in this Section 26.2.1 to potentially have increased costs on its transmission system located in the SERTP region in order to implement the proposal.

transmission need for which no transmission project is included in the latest ten (10) year expansion plan and/or regional transmission plan.

26.2.1.2 The cost used in this calculation will be quantified by the transmission cost within the SERTP region associated with:

(1) The project proposed for selection in a regional transmission plan for RCAP; and

(2) Any additional projects within the SERTP region on Impacted Utility transmission systems required to implement the proposal as identified pursuant to Section 26.1.

(3) For interregional transmission projects proposed for purposes of cost allocation between the SERTP and a neighboring region(s), the cost used in this calculation will be quantified by the transmission cost of the project multiplied by the allocation of the transmission project's costs (expressed as a fraction) to the SERTP region as specified in the applicable interregional cost allocation procedures, plus the transmission costs of any additional project within the SERTP region on Impacted Utility transmission systems required to implement the proposal as identified pursuant to Section 26.1.

26.2.1.3 If the initial BTC calculation results in a ratio equal to or greater than 1.0, then the Duke Transmission Provider will calculate the estimated change in real power transmission losses on the transmission system(s) of Impacted Utilities located in the SERTP. In that circumstance, an updated BTC ratio will be calculated consistent with Section 26.2. in which:

26.2.1.4 The cost savings associated with a calculated reduction of real power energy losses on the transmission system(s) will be added to the benefit; and

26.2.1.5 The cost increase associated with a calculated increase of real power energy losses on the transmission system(s) will be added to the cost.

26.2.2 The Duke Transmission Provider will develop planning level cost estimates for use in determining the regional benefit-to-cost ratio. Detailed engineering estimates may be used if available. If the Duke Transmission Provider uses a cost estimate different than a detailed cost estimate(s) provided by the transmission developer for use in performing

the regional benefit-to-cost ratio, the Duke Transmission Provider will provide a detailed explanation of such difference to the transmission developer.

26.2.3 The cost savings and/or increase associated with real power losses on the transmission system(s) within the SERTP region with the implementation of the proposed regional transmission project will be estimated for each Impacted Utility throughout the ten (10) year transmission planning horizon as follows:

26.2.3.1 The Duke Transmission Provider will utilize power flow models to determine the change in real power losses on the transmission system at estimated average load levels.

(a) If the estimated change in real power transmission losses is less than 1 MW on a given transmission system of an Impacted Utility, no cost savings and/or cost increase for change in real power transmission losses on such system will be assigned to the proposal.

26.2.3.2 The Duke Transmission Provider will estimate the energy savings associated with the change in real power losses utilizing historical or forecasted data that is publicly available (*e.g.*, FERC Form 714).

26.2.4 Within 30 days of the Duke Transmission Provider completing the foregoing regional benefit-to-cost analysis, the Duke Transmission Provider will notify the transmission developer of the results of that analysis. For potential transmission projects found to satisfy the foregoing benefit-to-cost analysis, the Impacted Utilities will then consult with the transmission developer of that project to establish a schedule for the following activities specified below, with the schedule to be developed within 90 days of the notification: 1) the transmission developer providing detailed financial terms for its proposed project and 2) the proposed transmission project to be reviewed by the jurisdictional and/or governance authorities of the Impacted Utilities pursuant to Section 26.4 for potential selection in a regional transmission plan for RCAP.[14]

[14] The schedule established in accordance with Section 26.2.4 will reflect considerations such as the timing of those transmission needs the regional project may address as well as the lead-times of the regional project, transmission projects that must be implemented in support of the regional project, and projects that may be displaced by the regional project. This schedule may be revised by the Duke Transmission Provider and the Impacted Utilities, in consultation with the

(cont'd)

26.3 The Transmission Developer to Provide More Detailed Financial Terms and the Performance of a Detailed Transmission Benefit-to-Cost Analysis:

26.3.1 By the date specified in the schedule established in Section 26.2.4, the transmission developer shall identify the detailed financial terms for its proposed project, establishing in detail: (1) the total cost to be allocated to the Beneficiaries if the proposal were to be selected in a regional transmission plan for RCAP, and (2) the components that comprise that cost, such as the costs of:

26.3.1.1 Engineering, procurement, and construction consistent with Good Utility Practice and standards and specifications acceptable to the Duke Transmission Provider,

26.3.1.2 Financing costs, required rates of return, and any and all incentive-based (including performance based) rate treatments,

26.3.1.3 Ongoing operations and maintenance of the proposed transmission project,

26.3.1.4 Provisions for restoration, spare equipment and materials, and emergency repairs, and

26.3.1.5 Any applicable local, state, or federal taxes.

26.3.2 To determine whether the proposed project is considered at that time to remain a more efficient or cost effective alternative, the Duke Transmission Provider will then perform a more detailed 1.25 transmission benefit-to-cost analysis consistent with that performed pursuant to Section 26.2.1. This more detailed transmission benefit-to-cost analysis will be based upon the detailed financial terms[15] provided by the transmission developer, as may be modified by agreement of the transmission developer and Beneficiary(ies), and any additional, updated, and/or more detailed transmission planning, cost or benefit information/component(s) as provided by the Impacted Utilities that are applicable to/available for the proposed transmission project, the projects that would be displaced, any additional projects required to

(cont'd from previous page)
transmission developer, as appropriate to address, for example, changes in circumstances and/or underlying assumptions.

[15] The detailed financial terms are to be provided by the date specified in the schedule to be developed by the Impacted Utilities and the transmission developer in accordance with Section 26.2.4.

implement the proposal and real power transmission loss impacts.[16] Once the Duke Transmission Provider has determined the outcome of the aforementioned regional benefit-to-cost analysis, the Transmission Provider will notify the transmission developer within 30 days of the outcome.

26.3.3 To provide for an equitable comparison, the costs of the transmission projects that would be displaced and/or required to be implemented in such a detailed benefit-to-cost analysis will include comparable cost components as provided in the proposed project's detailed financial terms (and vice-versa), as applicable. The cost components of the transmission projects that would be displaced will be provided by the Duke Transmission Provider and/or other Impacted Utilities who would own the displaced transmission project. The cost components of the proposed transmission project and of the transmission projects that would be displaced will be reviewed and scrutinized in a comparable manner in performing the detailed benefit to cost analysis.

26.4 Jurisdictional and/or Governance Authority Review : Should the proposed transmission project be found to satisfy the more detailed benefit-to-cost analysis specified in Section 26.3, the state jurisdictional and/or governance authorities of the Impacted Utilities will be provided an opportunity to review the transmission project proposal and otherwise consult, collaborate, inform, and/or provide recommendations to the Duke Transmission Provider. The recommendations will inform the Duke Transmission Provider's selection decision for purposes of Section 26.5, and such a recommendation and/or selection of a project for inclusion in a regional transmission plan for RCAP shall not prejudice the state jurisdictional and/or governance authority's (authorities') exercise of any and all rights granted to them pursuant to state or Federal law with regard to any project evaluated and/or selected for RCAP that falls within such authority's (authorities') jurisdiction(s).

26.5 Selection of a Proposed Transmission Project for RCAP:

26.5.1 The Duke Transmission Provider will select a transmission project (proposed for RCAP) for inclusion in the regional transmission plan for RCAP for the then-current planning cycle if the Duke Transmission Provider determines that the project is a more efficient or cost effective

[16] The performance of this updated, detailed benefit-to-cost analysis might identify different Beneficiaries and/or Impacted Utilities than that identified in the initial benefit-to-cost analysis performed in accordance with Section 26.2.1.

transmission project as compared to other alternatives to reliably address transmission need(s).[17] Factors considered in this determination include:

26.5.1.1 Whether the project meets or exceeds the detailed benefit-to-cost analysis performed pursuant to Section 26.3. Such detailed benefit-to-cost analysis may be reassessed, as appropriate, based upon the then-current Beneficiaries and to otherwise reflect additional, updated, and/or more detailed transmission planning, cost or benefit information/component(s) that are applicable to/available for the proposed transmission project, the projects that would be displaced, any additional projects required to implement the proposal and real power transmission loss impacts;

26.5.1.2 Any recommendation provided by state jurisdictional and/or governance authorities in accordance with Section 26.4 including whether the transmission developer is considered reasonably able to construct the transmission project in the proposed jurisdiction(s);

26.5.1.3 Whether, based on the timing for the identified transmission need(s) and the stages of project development provided by the transmission developer in accordance with Section 25.1 and as otherwise may be updated, the transmission developer is considered to be reasonably able to construct and tie the proposed transmission project into the transmission system by the required in-service date;

26.5.1.4 Whether it is reasonably expected that the Impacted Utilities will be able to construct and tie-in any additional facilities on their systems located within the SERTP region that are necessary to reliably implement the proposed transmission project; and

26.5.1.5 Any updated qualification information regarding the transmission developer's finances or technical expertise, as detailed in Section 23.

[17] Being selected for RCAP in the then-current iteration of a regional transmission plan only provides how the costs of the transmission project may be allocated in Commission-approved rates should the project be built. Being selected in a regional transmission plan for RCAP provides no rights with regard to siting, construction, or ownership. The transmission developer must obtain all requisite approvals to site and build its transmission project. A transmission project may be removed from being selected in a regional transmission plan for RCAP in accordance with the provisions of Sections 25.4, 28, 29, 30 and 31.

The Duke Transmission Provider will post on the Regional Planning Website its determination regarding whether a proposed project will be selected for inclusion in the regional transmission plan for RCAP for that transmission planning cycle. The Duke Transmission Provider will document its determination in sufficient detail for Stakeholders to understand why a particular project was selected or not selected for RCAP and will make this supporting documentation available to the transmission developer or Stakeholders, subject to any applicable confidentiality requirements. For projects selected in the regional transmission plan for purposes of RCAP, the documentation will also include sufficient information regarding the application of the regional cost allocation method to determine the benefits and identify the Beneficiaries of the proposed regional transmission project.

26.5.2 If a regional transmission project is selected in the regional transmission plan for purposes of RCAP, the Duke Transmission Provider will perform analyses to determine whether, throughout the ten (10) year planning horizon, the proposed transmission project could potentially result in reliability impacts to the transmission system(s) of an adjacent neighboring transmission planning region(s). If a potential reliability impact is identified, the Duke Transmission Provider will coordinate with the neighboring planning region on any further evaluation. The costs associated with any required upgrades identified in neighboring planning regions will not be included for RCAP within the SERTP.

27. COST ALLOCATION TO THE BENEFICIARIES:

If a regional transmission project is selected in a regional transmission plan for RCAP in accordance with Section 26.5 and then constructed and placed into service, the Beneficiaries will be allocated the regional transmission project's costs based upon their cost savings calculated in accordance with Section 26.3 and associated with:

27.1 The displacement of one or more of the transmission projects previously included in their ten (10) year transmission expansion plan.

27.2 The displacement of one or more regional transmission projects previously included in the regional transmission plan. More specifically, if a regional transmission project addresses the same transmission need(s) as a transmission project selected in a regional transmission plan for RCAP and displaces the original RCAP project as a more efficient or cost effective alternative, this cost allocation component will be based upon the costs of the original RCAP project that were to be allocated to the Beneficiaries in accordance with the application of the regional cost allocation method to the transmission project being displaced.

27.3 Any alternative transmission project(s) that would be required in lieu of the regional transmission project, if the proposed regional transmission project addresses a transmission need for which no transmission project is included in the

latest ten (10) year expansion plan and/or regional transmission plan.

27.4 The reduction of real power transmission losses on their transmission system.

28. ON-GOING EVALUATIONS OF PROPOSED PROJECTS:

28.1 In order to ensure that the Duke Transmission Provider can efficiently and cost effectively meet its respective reliability, duty to serve, and cost of service obligations, and to ensure that the proposed transmission project remains the more efficient or cost effective alternative, the Duke Transmission Provider will continue to reevaluate the regional transmission plan throughout the then-current planning cycle and in subsequent cycles. This continued reevaluation will assess, in subsequent expansion planning processes that reflect ongoing changes in actual and forecasted conditions, the then-current transmission needs and determine whether transmission projects included in the regional transmission plan (i) continue to be needed and (ii) are more efficient or cost effective as compared to alternatives.

28.1.1 These on-going assessments will include reassessing transmission projects that have been selected in the regional transmission plan for RCAP and any projects that are being considered for potential selection in a regional transmission plan for RCAP.

28.2 Even though a transmission project may have been selected in a regional transmission plan for RCAP in an earlier regional transmission plan, if it is determined that the transmission project is no longer needed and/or it is no longer more efficient or cost effective than alternatives, then the Duke Transmission Provider may notify the transmission developer and remove the proposed project from being selected in a regional transmission plan for RCAP.

28.3 The cost allocation of a regional transmission project selected in a regional transmission plan for RCAP that remains selected in the regional transmission plan for RCAP may be modified in subsequent planning cycles based upon:

28.3.1 The then-current determination of benefits (calculated consistent with Section 26.3),

28.3.2 Cost allocation modifications as mutually agreed by the Beneficiaries, or

28.3.3 Cost modifications, as found acceptable by both the transmission developer and the Beneficiary(ies).

All prudently incurred costs of the regional transmission project will be allocated if the project remains selected in the regional plan for RCAP.

28.4 The reevaluation of the regional transmission plan will include the reevaluation of a particular transmission project included in the regional transmission plan until it is no longer reasonably feasible to replace the proposed transmission project as a

result of the proposed transmission project being in a material stage of construction and/or if it is no longer considered reasonably feasible for an alternative transmission project to be placed in service in time to address the underlying transmission need(s) the proposed project is intended to address.

29. DELAY OR ABANDONMENT:

29.1 The transmission developer shall promptly notify the Duke Transmission Provider should any material changes or delays be encountered in the development of a potential transmission project selected in a regional transmission plan for RCAP. As part of the Duke Transmission Provider's on-going transmission planning efforts, the Duke Transmission Provider will assess whether alternative transmission solutions may be required in addition to, or in place of, a potential transmission project selected in a regional transmission plan for RCAP due to the delay in its development or abandonment of the project. The identification and evaluation of potential transmission project alternative solutions may include transmission project alternatives identified by the Duke Transmission Provider to include in the ten year transmission expansion plan. Furthermore, nothing precludes the Duke Transmission Provider from proposing such alternatives for potential selection in a regional transmission plan for RCAP pursuant to Section 25.

29.2 Based upon the alternative transmission projects identified in such on-going transmission planning efforts, the Duke Transmission Provider will evaluate the transmission project alternatives consistent with the regional planning process. The Duke Transmission Provider will remove a delayed project from being selected in a regional transmission plan for RCAP if the project no longer:

29.2.1 Adequately addresses underlying transmission needs by the required transmission need dates; and/or

29.2.2 Remains more efficient or cost effective based upon a reevaluation of the detailed benefit-to-cost calculation. The BTC calculation will factor in any additional transmission solutions required to implement the proposal (*e.g.*, temporary fixes) and will also compare the project to identified transmission project alternatives.

30. MILESTONES OF REQUIRED STEPS NECESSARY TO MAINTAIN STATUS AS BEING SELECTED FOR RCAP:

30.1 Once a regional transmission project is selected in a regional transmission plan for RCAP, the transmission developer must submit a development schedule to the Duke Transmission Provider and the Impacted Utilities that establishes the milestones by which the necessary steps to develop and construct the transmission project must occur. These milestones include (to the extent not already accomplished) obtaining all necessary ROWs and requisite environmental, state, and other governmental approvals. A development schedule will also need to be

established for any additional projects by Impacted Utilities that are determined necessary to integrate the transmission projects selected in a regional transmission plan for RCAP. The schedule and milestones must be satisfactory to the Duke Transmission Provider and the Impacted Utilities.

30.2 In addition, the Beneficiaries will also determine and establish the deadline(s) by which the transmission developer must provide security/collateral for the proposed project that has been selected in a regional transmission plan for RCAP to the Beneficiaries or otherwise satisfy requisite creditworthiness requirements. The security/collateral/creditworthiness requirements shall be as described or referenced in Section 31.

30.3 If such critical steps are not met by the specified milestones and then afterwards maintained, then the Duke Transmission Provider may remove the project from being selected in a regional transmission plan for RCAP.

31. CREDIT AND SECURITY REQUIREMENTS TO PROTECT THE BENEFICARIES AGAINST DELAY OR ABANDONMENT OF A TRANSMISSION PROJECT SELECTED IN A REGIONAL TRANSMISSION PLAN FOR RCAP

31.1 Demonstration of Financial Strength**:** In order for a project to be selected and remain selected in a regional transmission plan for RCAP, the transmission developer must satisfy the following:

31.1.1 Consistent with Sections 23.1 and 25.5.3, the transmission developer for such project or its parent company providing the Beneficiaries with a parent guaranty ("Parent Guarantor") must have and maintain a Credit Rating of BBB- (or equivalent) or better from one or more of the Rating Agencies and not have or obtain less than any such Credit Rating by any of the Rating Agencies, or the transmission developer must be Unrated and have and maintain a Rating Equivalent of BBB- or better.

31.1.2 In addition to the requirements of Section 31.1.1, the transmission developer must satisfy one of the following by and at all times after the deadline established pursuant to Section 30.2:

31.1.2.1 The transmission developer must (i) have and maintain a Credit Rating of BBB+ (or equivalent) or better from one or more of the Rating Agencies and not have or obtain less than any such Credit Rating by any of the Rating Agencies or (ii) be Unrated and have and maintain a Rating Equivalent of BBB+ or better; or

31.1.2.2 The transmission developer must provide to and maintain with the Beneficiaries Eligible Developer Collateral (as defined in Section 31.4 below) in an amount equal to twenty-five percent

(25%) of the total costs of the transmission developer's projects selected in a regional transmission plan for RCAP.

31.2 Limitation of Exposure

31.2.1 Notwithstanding the foregoing, the Beneficiaries may limit their exposure with respect to transmission projects selected in a regional transmission plan being developed by a transmission developer satisfying the requirements of Section 31.1.2.1 above if the aggregate costs of such projects are at any time in excess of the lesser of (a) 10% of the transmission developer's Tangible Net Worth if the transmission developer has a Tangible Net Worth of less than one billion dollars or (b) two hundred fifty million dollars (the "Cap"). In such event, the transmission developer must provide to and maintain with the Beneficiaries Eligible Developer Collateral in a dollar amount not less than the amount by which the aggregate costs of such projects exceed the Cap. Each transmission developer will provide and update the Beneficiaries with such information as is necessary to establish and confirm the transmission developer's Tangible Net Worth. For purposes hereof, "Tangible Net Worth" shall be equal to the relevant entity's total equity minus its intangible assets and also minus its goodwill.

31.2.2 Notwithstanding the foregoing, the Beneficiaries may limit their exposure with respect to transmission projects selected in a regional transmission plan being developed by a transmission developer or its affiliates who are satisfying the requirements of Section 31.1.2.2 or 31.2.1 above by providing and maintaining a Developer Parent Guaranty (as defined in Section 31.4 below) if the aggregate costs of such projects are at any time in excess of the lesser of (a) 10% of the Parent Guarantor's Tangible Net Worth if such Parent Guarantor has a Tangible Net Worth of less than one billion dollars or (b) two hundred fifty million dollars (the "Guarantor Cap"). In such event, the transmission developer must provide to and maintain with the Beneficiaries an acceptable Irrevocable Letter of Credit in a dollar amount not less than the amount by which the aggregate costs of such projects exceed the Guarantor Cap. Each transmission developer will provide and update the Beneficiaries with such information as is necessary to establish and confirm the Parent Guarantor's Tangible Net Worth.

31.3 Credit Evaluation/Updates

31.3.1 On at least an annual basis, a transmission developer with a transmission project selected in a regional transmission plan for RCAP will provide the Beneficiaries with an updated, completed application and the updated information described in Section 23.1.

31.3.2 On at least an annual basis, or more often if there is a Material Adverse Change in the financial condition and/or a relevant change in the Tangible Net Worth of the transmission developer or its Parent Guarantor or if there are issues or changes regarding a transmission project, the Beneficiaries may review the Credit Rating and review and update the Rating Equivalent, Cap, Guarantor Cap and Eligible Developer Collateral requirements for said transmission developer. In the event said transmission developer is required to provide additional Eligible Developer Collateral as a result of the Beneficiaries' review/update, the Beneficiaries will notify the transmission developer and such additional Eligible Developer Collateral must be provided within five (5) business days of such notice, all in amount and form approved by the Beneficiaries.

31.4 Eligible Developer Collateral: Acceptable forms of eligible collateral meeting the requirements referenced below and the Beneficiaries' approval (the "Eligible Developer Collateral") may be either in the form of an irrevocable letter of credit ("Irrevocable Letter of Credit") or parent guaranty issued by a Parent Guarantor who has and maintains a Credit Rating of BBB+ (or equivalent) or better from one or more of the Rating Agencies and does not have or obtain less than any such Credit Rating by any of the Rating Agencies ("Developer Parent Guaranty"). Acceptable forms of Eligible Developer Collateral and related requirements and practices will be posted and updated on the Regional Planning Website and/or provided to the relevant transmission developer directly.

31.4.1 Each Beneficiary shall require an Irrevocable Letter of Credit to be issued to it in a dollar amount equal to the percentage of the costs of a transmission developer's transmission projects allocated or proposed to be allocated to it ("Percentage") multiplied by the aggregate dollar amount of all Irrevocable Letters of Credit constituting or to constitute Eligible Developer Collateral for such transmission projects.

31.4.2 Each Beneficiary shall require a Developer Parent Guaranty to be issued to it in a dollar amount equal to its Percentage multiplied by the aggregate dollar amount of all Developer Parent Guaranties constituting or to constitute Eligible Developer Collateral for such transmission projects.

31.4.2.1 A transmission developer supplying a Developer Parent Guaranty must provide and continue to provide the same information regarding the Parent Guarantor as is required of a transmission developer, including rating information, financial statements and related information, references, litigation information and other disclosures, as applicable.

31.4.2.2 All costs associated with obtaining and maintaining Irrevocable Letters of Credit and/or Developer Parent

Guaranties and meeting the requirements of this Section 31 are the responsibility of the transmission developer.

31.4.2.3 The Beneficiaries reserve the right to deny, reject, or terminate acceptance and acceptability of any Irrevocable Letter of Credit or any Developer Parent Guaranty as Eligible Developer Collateral at any time for reasonable cause, including the occurrence of a Material Adverse Change or other change in circumstances.

31.5 Cure Periods/Default: If a transmission developer fails to comply with the requirements of this Section 31 and such failure is not cured within ten (10) business days after its initial occurrence, the Beneficiaries may declare such transmission developer to be in default hereunder and/or the Beneficiaries may, without limiting their other rights and remedies, revise the Cap, Guarantor Cap and Eligible Developer Collateral requirements; further, if such failure is not cured within an additional ten (10) business days, the Beneficiaries may, without limiting their other rights and remedies, immediately remove any or all of the transmission developer's projects from consideration for potential selection in the regional transmission plan for RCAP and, if previously selected, from being selected in a regional transmission plan for RCAP, as applicable.

Appendix 1
[Reserved]

Appendix 2

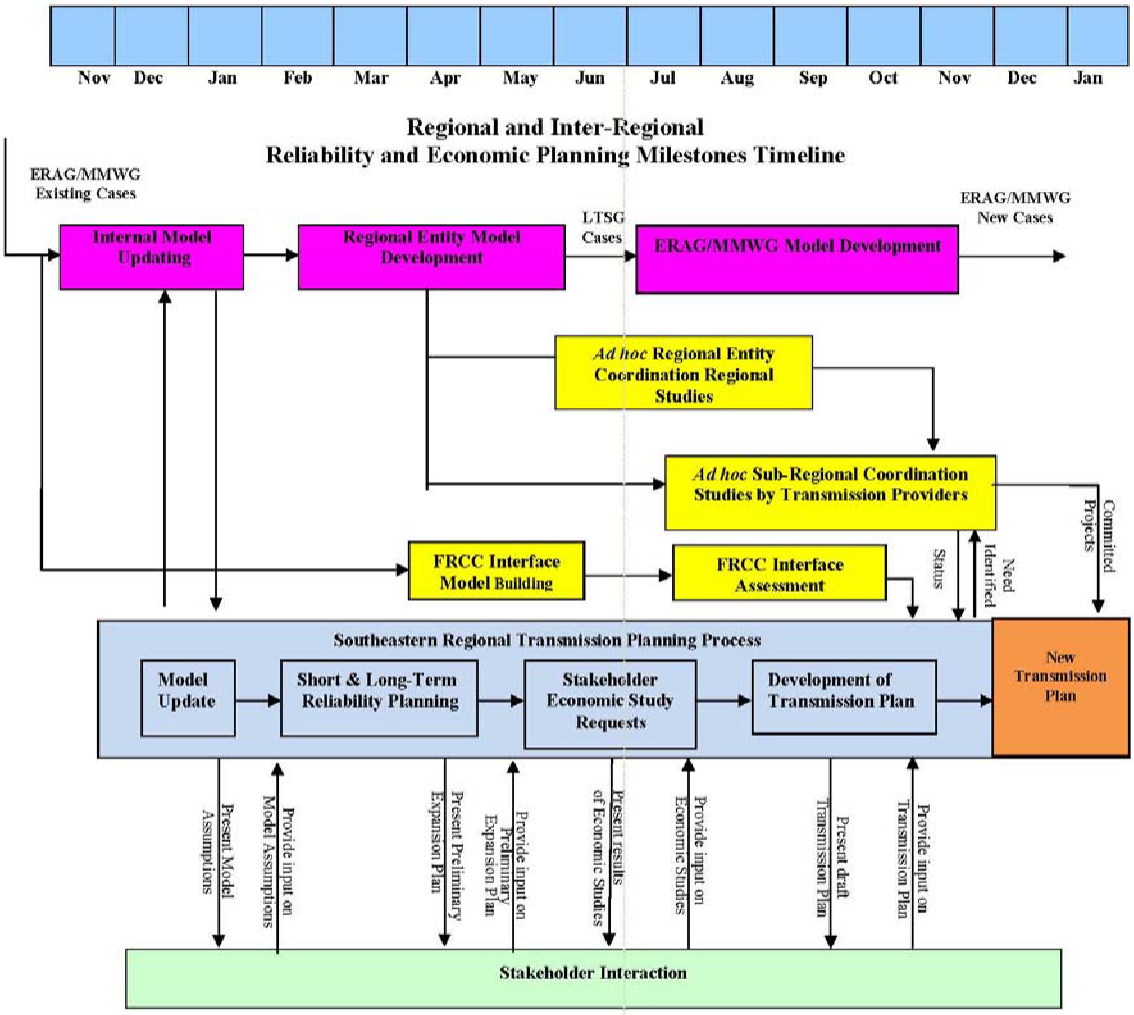
Nov
Dec
Jan
Feb
Mar
Apr
May
Jun
Jul
Aug
Sep
Oct
Nov
Dec
Jan
Regional and Inter-Regional
Reliability and Economic Planning Milestones Timeline
ERAG/MMWG
Existing Cases
Internal Model
Updating
Regional Entity Model
Development
LTSG
Cases
ERAG/MMWG Model Development
ERAG/MMWG
New Cases
Ad hoc Regional Entity
Coordination Regional
Studies
Ad hoc Sub-Regional Coordination
Studies by Transmission Providers
Committed
Projects
FRCC Interface
Model Building
FRCC Interface
Assessment
Status
Need
Identified
Southeastern Regional Transmission Planning Process
Model
Update
Short & Long-Term
Reliability Planning
Stakeholder
Economic Study
Requests
Development of
Transmission Plan
New
Transmission
Plan
Present Model
Assumptions
Provide input on
Model Assumptions
Present Preliminary
Expansion Plan
Provide input on
Preliminary
Expansion Plan
Present results
of Economic Studies
Provide input on
Economic Studies
Present draft
Transmission Plan
Provide input on
Transmission Plan
Stakeholder Interaction

Appendix 3

Sector Voting Example

The example below illustrates the TAG Sector Voting Process. For purposes of explaining the example, we assume that the General Public (GP) Sector has 10 Individuals present. In addition to the 10 Individuals, there are 17 other TAG Sector Entities present, spread across four TAG Sectors (Cooperative LSEs (Coop LSE); Municipal LSEs (Muni LSE); Investor-Owned LSEs (IOU LSE); and Transmission Customers (TC)). These 17 TAG Sector Entities may each have several TAG participants present but only one may vote in one sector. Each Individual and TAG Sector Entity casts their vote, which vote is then weighted based on the number of persons/entities voting in the TAG Sector of which they are a member. E.g., since there are six Coop LSE voters present, each Coop LSE's vote is worth 1.00/6 or .166 (*see* Columns 4 and 5 for weighted vote). As the final step, the votes are weighted again, based on the number of TAG Sectors present. With five TAG Sectors present, each Sector Yes Vote and Sector No Vote is multiplied by 1.00/5 = .20. The weighted total is reported in columns 6 and 7. In the example, the No votes have won .53 to .47.

Column	**1**	**2**	**3**	**4**	**5**	**6**	**7**
Sector	**No. of Voters**	**Yes Votes**	**No Votes**	**Sector Yes Vote**	**Sector No Vote**	**Weighted Sector Yes**	**Weighted Sector No Vote**
Coop LSE	6	6	0	1.00	0	.20	0
Muni LSE	8	2	6	.25	.75	.05	.15
IOU LSE	2	1	1	.50	.50	.10	.10
TP/TO	0	0	0	0	0	0	0
TCs	1	0	1	0	1.00	0	.20
GICs	0	0	0	0	0	0	0
ECs	0	0	0	0	0	0	0
GP	10	6	4	.60	.40	.12	.08
Total Vote						0.47	0.53

ATTACHMENT N-1 - FRCC

Interregional Transmission Coordination Between the SERTP and FRCC Regions

The Duke Transmission Provider, through its regional transmission planning process, coordinates with the Florida Reliability Coordinating Council region ("FRCC") to address transmission planning coordination issues related to interregional transmission facilities. The interregional transmission coordination procedures include a detailed description of the process for coordination between the public utility transmission providers in the SERTP and FRCC (i) with respect to an interregional transmission facility that is proposed to be located in both transmission planning regions and (ii) to identify possible interregional transmission facilities that could address transmission needs more efficiently or cost-effectively than transmission facilities included in the respective regional transmission plans. The interregional transmission coordination procedures are hereby provided in this Attachment N-1 - FRCC with additional materials provided on the Regional Planning website.

The Duke Transmission Provider ensures that the following requirements are included in the interregional transmission coordination procedures:

(1) A commitment to coordinate and share the results of the SERTP and FRCC regional transmission plans to identify possible interregional transmission projects that could address transmission needs more efficiently or cost-effectively than separate regional transmission facilities, as well as a procedure for doing so;

(2) A formal procedure to identify and jointly evaluate transmission facilities that are proposed to be located in both transmission planning regions;

(3) A duty to exchange, at least annually, planning data and information; and

(4) A commitment to maintain a website or e-mail list for the communication of information related to the coordinated planning process.

The Duke Transmission Provider has worked with transmission providers located in the FRCC to develop a mutually agreeable method for allocating between the two transmission planning regions the costs of new interregional transmission facilities that are located within both transmission planning regions. Such cost allocation method satisfies the six interregional cost allocation principles set forth in Order No. 1000 and is included in this Attachment N-1 - FRCC.

For purposes of this Attachment N-1 - FRCC, the SERTP regional transmission planning process is the process described in Attachment N-1 of this Tariff; the FRCC regional transmission planning process is the process described in the relevant Attachment Ks (or analog tariff sections) of the public utility transmission providers in the FRCC. References to the respective regional transmission planning processes in this Attachment N-1 - FRCC are intended to identify the activities described in those tariff provisions. Unless noted otherwise, Section references in this Attachment N-1 - FRCC refer to Sections within this Attachment N-1 - FRCC.

INTERREGIONAL TRANSMISSION PLANNING PRINCIPLES

Representatives of the SERTP and the FRCC will meet no less than once per year to facilitate the interregional coordination procedures described below (as applicable). Representatives of the SERTP and the FRCC may meet more frequently during the evaluation of project(s) proposed for purposes of interregional cost allocation between the SERTP and the FRCC.

1. Coordination

1.1 Review of Respective Regional Plans: Biennially, the Duke Transmission Provider and the FRCC shall review each other's current regional plan(s) and engage in the data exchange and joint evaluation described in Sections 2 and 3.

1.2 Review of Proposed Interregional Projects: The Duke Transmission Provider and the FRCC will coordinate with regard to the evaluation of interregional transmission projects identified by the Duke Transmission Provider and the FRCC as well as interregional transmission projects proposed for Interregional Cost Allocation Purposes ("Interregional CAP"), pursuant to Sections 3 and 4, below. Initial coordination activities regarding new interregional proposals will typically begin during the third calendar quarter. The Duke Transmission Provider and the FRCC will typically exchange status updates for new interregional transmission project proposals or proposals currently under consideration every six (6) months, or as needed. These status updates will generally include, if applicable: (i) an update of the region's evaluation of the proposal; (ii) the latest calculation of Regional Benefits (as defined in Section 4.2); (iii) the anticipated timeline for future assessments; and (iv) reevaluations related to the proposal.

1.3 Coordination of Assumptions Used in Joint Evaluation: The Duke Transmission Provider and the FRCC will coordinate assumptions used in joint evaluations, as necessary, which includes items such as:

- Expected timelines/milestones associated with the joint evaluation;
- Study assumptions; and
- Regional benefit calculations.

2. Data Exchange

2.1 At least annually, the Duke Transmission Provider and the FRCC shall exchange power-flow models and associated data used in the regional transmission planning processes to develop their respective then-current regional transmission plan(s). This exchange will typically occur by the beginning of each region's transmission planning cycle. Additional transmission-based models and data may be exchanged between the Duke Transmission Provider and the FRCC as necessary and if requested. For purposes of the interregional coordination activities outlined in this Attachment N-1 - FRCC, only data and models used in the development of the Duke Transmission Provider's and FRCC's then-current regional transmission plans and used in their respective regional transmission planning processes will be exchanged. This data will be posted on the pertinent regional transmission planning process' website, consistent with the posting requirements of the respective regional transmission planning processes, and is considered CEII. The Duke Transmission Provider shall notify the FRCC of such posting.

2.2 The SERTP regional transmission plans will be posted on the Regional Planning website pursuant to the Duke Transmission Provider's regional transmission planning process. The Duke Transmission Provider will also notify the FRCC of such posting so the FRCC may retrieve these transmission plans. The FRCC will exchange its then-current regional plan(s) in a similar manner according to its regional transmission planning process.

3. Joint Evaluation

3.1 Identification of Interregional Projects: The Duke Transmission Provider and the FRCC shall exchange planning models and data and current regional transmission plans as described in Section 2. The Duke Transmission Provider and the FRCC will review one another's then-current regional plan(s) in accordance with the coordination procedures described in Section 1 and their respective regional transmission planning processes. If through this review, the Duke Transmission Provider or the FRCC identify a potential interregional project that could be more efficient or cost effective than projects included in the respective regional plans, the Duke Transmission Provider and the FRCC will jointly evaluate the potential project pursuant to Section 3.4.

3.2 Identification of Interregional Projects by Stakeholders: Stakeholders may also propose projects that may be more efficient or cost-effective than projects included in the SERTP's and the FRCC's regional transmission plans pursuant to the procedures in each region's regional transmission planning processes. The Duke Transmission Provider and the FRCC will evaluate interregional projects proposed by stakeholders pursuant to Section 3.4.

3.3 Identification of Interregional Projects by Developers: Interregional transmission projects proposed for potential Interregional CAP must be submitted in both the SERTP and FRCC regional transmission planning processes. The project submittal must satisfy the requirements of Section 4.1. The submittal must identify the potential transmission project as interregional in scope and identify the SERTP and FRCC as regions in which the project is proposed to interconnect.

The Duke Transmission Provider will verify whether the submittal for the potential interregional transmission project satisfies all applicable requirements. Upon finding that the proposed interregional transmission project satisfies all such applicable requirements, the Duke Transmission Provider will notify the FRCC. Once the potential project has been proposed through the regional transmission planning processes in both regions, and upon both regions so notifying one another that the project is eligible for consideration pursuant to their respective regional transmission planning processes, the Duke Transmission Provider and the FRCC will jointly evaluate the proposed_interregional projects pursuant to Sections 3 and 4.

3.4 Evaluation of Interregional Projects: The Duke Transmission Provider and the FRCC shall act through their respective regional transmission planning processes to evaluate potential interregional transmission projects and to determine whether the inclusion of any potential interregional transmission projects in each region's regional transmission plan would be more efficient or cost-effective than projects included in their respective then-current regional transmission plans. Such analysis shall be consistent with accepted planning practices of the respective regions and the transmission study methodologies utilized to produce each region's respective regional transmission plan(s). The Duke Transmission Provider will evaluate potential interregional transmission projects consistent with Sections 4, 5 and 20 of Attachment N-1. To the extent possible and as needed, assumptions and models will be coordinated between the Duke Transmission

Provider and the FRCC as described in Section 1. Data shall be exchanged to facilitate this evaluation using the procedures described in Section 2.

3.5 Initial Evaluation of Interregional Projects Proposed for Interregional Cost Allocation Purposes: If an interregional project is proposed in the SERTP and the FRCC for Interregional CAP, the initial evaluation of the project will typically begin during the third calendar quarter, with analysis conducted in the same manner as analysis of interregional projects identified pursuant to Sections 3.1 and 3.2. Projects proposed for Interregional CAP shall also be subject to the requirements of Section 4.

4. Cost Allocation: If an interregional project is proposed for Interregional CAP in the SERTP and the FRCC, then the following methodology applies:

4.1 Interregional Projects Proposed for Interregional Cost Allocation Purposes: For a transmission project to be considered for Interregional CAP within the SERTP and the FRCC, the following criteria must be met:

A. The transmission project must be interregional in nature:

- Be located in both the SERTP and the FRCC regions;
- Interconnect to transmission facilities in both the SERTP and FRCC regions. The facilities to which the project is proposed to interconnect may be either existing transmission facilities or transmission projects included in the regional transmission plan that are currently under development; and
- Meet the threshold criteria for transmission projects potentially eligible to be included in the regional transmission plans for purposes

of cost allocation in both the SERTP and the FRCC, pursuant to their respective regional transmission planning processes.

B. On a case-by-case basis, the Duke Transmission Provider and the FRCC will consider a transmission project that does not satisfy all of the criteria specified in Section 4.1.A but: (i) meets the threshold criteria for a project proposed to be included in the regional transmission plan for purposes of cost allocation in at least one of the two regions; (ii) would be located in both regions; and (iii) would be interconnected to transmission facilities in both the SERTP and FRCC regions. The facilities to which the project is proposed to interconnect may be either existing transmission facilities or transmission projects included in the regional transmission plan that are currently under development.

C. The transmission project must be proposed for purposes of cost allocation in both the SERTP and the FRCC.

- Except for the case-by-case exception for project threshold criteria identified in Section 4.1.B, the transmission developer and project submittal must satisfy all criteria specified in the respective regional transmission processes.
- The proposal should be submitted in the timeframes outlined in the respective regional transmission planning processes.

4.2 Evaluation of Interregional Projects Proposed for Interregional Cost Allocation Purposes: Interregional projects proposed for Interregional CAP in

the SERTP and the FRCC shall be evaluated within the respective regions as follows:

A. Each region, acting through its regional transmission planning process, will evaluate proposals to determine whether the proposed project(s) addresses transmission needs that are currently being addressed with projects in its regional transmission plan and, if so, which projects in the regional transmission plan could be displaced by the proposed project(s).

B. Based upon its evaluation, each region will quantify a Regional Benefit based upon the transmission costs that each region is projected to avoid due to its transmission project(s) being displaced by the proposal.

- For purposes of this Attachment N-1 - FRCC, "Regional Benefit" means the total avoided costs of projects included in the then-current regional transmission plans that would be displaced if the proposed interregional transmission project was included. The Regional Benefit is not necessarily the same as the benefits used for purposes of *regional* cost allocation.

4.3. Calculation of Benefit to Cost Ratio: Each region will calculate a regional benefit to cost ("BTC") ratio consistent with its regional process and compare the BTC ratio to its respective threshold to determine if the interregional project appears to be more efficient or cost effective than those projects included in its current regional transmission plan. Each region shall utilize the cost calculation(s) as defined in such region's regional transmission planning process (*e.g.*, the FRCC will compute the cost of the portion of the interregional project

that resides within the FRCC region in accordance with their regional process and the SERTP will do the same). The regions shall also coordinate such cost calculation assumptions in accordance with Section 1.3. The anticipated percentage allocation of costs of the interregional project to each region shall be based upon the ratio of the region's Regional Benefit to the sum of the Regional Benefits identified for both the SERTP and the FRCC. The Regional Benefits shall be determined pursuant to the methodology described in Section 4.2. Regional BTC assessments shall be performed in accordance with each region's regional transmission planning process, including but not limited to subsequent calculations and reevaluations.

4.4 Inclusion in Regional Transmission Plans: An interregional project proposed for Interregional CAP in the SERTP and the FRCC will be included in the respective regional transmission plans for purposes of cost allocation after:

A. Each region has performed all evaluations, as prescribed in its regional transmission planning process, necessary for a project to be included in its regional transmission plan for purposes of cost allocation;

- This includes any regional BTC ratio calculations performed pursuant to Section 4.3; and

B. Each region has obtained all approvals, as prescribed in its regional process, necessary for a project to be included in the regional transmission plan for purposes of cost allocation.

4.5 Allocation of Costs Between the SERTP and the FRCC: The cost of an interregional project, selected for purposes of cost allocation in the regional transmission plans of both the SERTP and the FRCC, will be allocated as follows:

A. Each region will be allocated a portion of the interregional project's costs in proportion to such region's Regional Benefit to the sum of the Regional Benefits identified for both the SERTP and the FRCC.

- The Regional Benefits used for this determination shall be based upon the last Regional Benefit calculation performed – pursuant to the method described in Section 4.2. – before each region included the project in its regional transmission plan for purposes of cost allocation and as approved by each region.

B. Costs allocated to each region shall be further allocated within each region pursuant to the cost allocation methodology contained in its regional transmission planning process.

C. Should one region be willing to bear more costs of the interregional transmission project than those costs identified pursuant to the methodology described in Section 4.5.A, the regions may voluntarily agree, subject to applicable regional approvals, to an alternative cost sharing arrangement.

4.6 Removal from Regional Plans: An interregional project may be removed from the SERTP's or the FRCC's regional transmission plan for purposes of cost allocation: (i) if the developer fails to meet developmental milestones; (ii) pursuant to the reevaluation procedures specified in the respective regional

transmission planning processes; or (iii) if the project is removed from one of the region's regional transmission plans pursuant to the requirements of its regional transmission planning process.

A. The Duke Transmission Provider shall notify the FRCC if an interregional project or a portion thereof is likely to be removed from its regional transmission plan.

5. Transparency

A. The Duke Transmission Provider shall post procedures for coordination and joint evaluation on the Regional Planning website.

B. Access to the data utilized will be made available through the Regional Planning website subject to the appropriate clearance, as applicable (such as CEII and confidential non-CEII). The Duke Transmission Provider shall make available on the Regional Planning website links to where stakeholders can register (if applicable/available) for the stakeholder committee(s) or distribution list(s) of the FRCC.

C. At the fourth quarter SERTP Summit, or as necessary due to current activity of proposed interregional transmission projects, the Duke Transmission Provider will provide status updates of interregional activities including:

- Facilities to be evaluated;
- Analysis performed; and
- Determinations/results.

D. Stakeholders will have an opportunity to provide input and feedback within the respective regional transmission planning processes of the SERTP and the FRCC

related to interregional facilities identified, analysis performed, and any determination/results. Stakeholders may participate in either or both regions' regional transmission planning processes to provide their input and feedback regarding the interregional coordination between the SERTP and the FRCC.

E. The Duke Transmission Provider will post, on the Regional Planning Website, a list of all interregional transmission projects that are proposed for potential selection in a regional transmission plan for purposes of cost allocation in both the SERTP and the FRCC that are found not to be eligible for consideration because they do not satisfy the regional project threshold criteria of one or both of the regions. The Duke Transmission Provider will also post an explanation of the relevant thresholds the proposed interregional project(s) failed to satisfy.

ATTACHMENT N-1 - MISO

Interregional Transmission Coordination Between the SERTP and MISO

The Duke Transmission Provider, through its regional transmission planning process, coordinates with the Midcontinent Independent System Operator region ("MISO") to address transmission planning coordination issues related to interregional transmission facilities. The interregional transmission coordination procedures include a detailed description of the process for coordination between public utility transmission providers in the SERTP and MISO (i) with respect to an interregional transmission facility that is proposed to be located in both transmission planning regions and (ii) to identify possible interregional transmission facilities that could address transmission needs more efficiently or cost-effectively than transmission facilities included in the respective regional transmission plans. The interregional transmission coordination procedures are hereby provided in this Attachment N-1 - MISO with additional materials provided on the Regional Planning website.

The Duke Transmission Provider ensures that the following requirements are included in these interregional transmission coordination procedures:

(1) A commitment to coordinate and share the results of the SERTP's and MISO's regional transmission plans to identify possible interregional transmission projects that could address transmission needs more efficiently or cost-effectively than separate regional transmission facilities, as well as a procedure for doing so;

(2) A formal procedure to identify and jointly evaluate transmission facilities that are proposed to be located in both transmission planning regions;

(3) A duty to exchange, at least annually, planning data and information; and

(4) A commitment to maintain a website or e-mail list for the communication of information related to the coordinated planning process.

The Duke Transmission Provider has worked with MISO to develop a mutually agreeable method for allocating between the two transmission planning regions the costs of new interregional transmission facilities that are located within both transmission planning regions. Such cost allocation method satisfies the six interregional cost allocation principles set forth in Order No. 1000 and are included in this Attachment N-1 - MISO.

For purposes of this Attachment N-1 - MISO, the SERTP regional transmission planning process is the process described in Attachment N-1 of this Tariff; MISO's regional transmission planning process is the process described in section X of Attachment FF to MISO's OATT. References to the respective regional transmission planning processes in this Attachment N-1 - MISO are intended to identify the activities described in those tariff provisions. Unless noted otherwise, Section references in this Attachment N-1 - MISO refer to Sections within this Attachment N-1 - MISO.

1. Interregional Transmission Coordination

1.1 Annual Meeting: Representatives of the SERTP and the staff of MISO will meet no less than once per year to facilitate the interregional coordination procedures described below (as applicable). Representatives of the SERTP and MISO staff may meet more frequently during the evaluation of interregional transmission project(s) proposed for purposes of interregional cost allocation between the SERTP and MISO transmission planning regions.

1.2 Website Posting of Information on Interregional Coordination: The Duke Transmission Provider shall utilize the Regional Planning website for communication of

information related to these coordinated interregional transmission planning procedures. The Duke Transmission Provider shall coordinate with MISO with respect to the posting of materials to the regional planning website related to the interregional coordination procedures between the SERTP and MISO transmission planning regions. The Duke Transmission Provider shall, at a minimum, provide the following on the Regional Planning website:

i. Interregional coordination and cost allocation procedures between the SERTP and MISO;

ii. Links to where stakeholders can register (if applicable/available) for the stakeholder committees or distribution lists of MISO;

iii. Documents related to joint evaluation of interregional transmission projects; and

iv. Status report on interregional transmission projects selected for purposes of interregional cost allocation between the SERTP and MISO.

2. Model and Data Exchange

At least annually, the Duke Transmission Provider and MISO shall exchange their then-current regional transmission plans including power-flow models and associated data used in the regional transmission planning processes to develop such transmission plan(s). This exchange will occur when such data is available in each of the regional transmission planning processes, typically during the first calendar quarter of each year. Additional transmission-based models and data may be exchanged between the Duke Transmission Provider and MISO as necessary and if requested. For purposes of their interregional coordination activities, the Duke Transmission Provider and MISO will exchange only data and models used in the development of their then-current regional transmission process and plans. This

data will be posted on the pertinent regional transmission planning process' websites, consistent with the posting requirements of the respective regional transmission planning processes, and subject to the applicable treatment of confidential data and Critical Energy Infrastructure Information (CEII). The Duke Transmission Provider shall notify MISO of such posting.

3. Identification and Joint Evaluation of Proposed Interregional Transmission Projects

3.1 Identification of Interregional Transmission Projects: At least biennially, the Duke Transmission Provider and MISO shall meet to review the respective regional transmission plans. Such plans include each region's transmission needs as prescribed by each region's planning process. This review shall occur on a mutually agreeable timetable, taking into account each region's regional transmission planning process timeline. If through this review, the Duke Transmission Provider and MISO identify a potential interregional transmission project that may be more efficient or cost-effective than regional transmission projects, the Duke Transmission Provider and MISO shall jointly evaluate the potential interregional transmission project pursuant to Section 3.4.

3.2 Identification of Interregional Transmission Projects by Stakeholders: Stakeholders and transmission developers (pursuant to Section 4.1) may also propose interregional transmission projects that may be more efficient or cost-effective than regional transmission projects pursuant to the procedures in each region's regional transmission planning processes.

3.3 Identification of Interregional Transmission Projects by Developers: Interregional transmission projects proposed for interregional cost allocation

purposes ("Interregional CAP") must be submitted in both the SERTP and MISO regional transmission planning processes. The project submittal must satisfy the requirements of Section 4.1 except for the benefit-to-cost ratio requirements of Section 4.1.A.ii.[1] The submittal must identify the potential transmission project as interregional in scope and identify the SERTP and MISO as regions in which the project is proposed to interconnect. The Duke Transmission Provider will verify whether the submittal for the potential interregional transmission project satisfies all applicable requirements. Upon finding that the proposed interregional transmission project satisfies all such applicable requirements, the Duke Transmission Provider will notify MISO. Once the potential project has been proposed through the regional transmission planning processes in both regions, and upon both regions so notifying one another that the project is eligible for consideration pursuant to their respective regional transmission planning processes, the Duke Transmission Provider and MISO will jointly evaluate the proposed interregional projects pursuant to Sections 3 and 4.

3.4 Evaluation of Interregional Transmission Projects: The Duke Transmission Provider and MISO shall act through their respective regional transmission planning processes in the joint evaluation of potential interregional transmission projects identified pursuant to Sections 3.1 and 3.2 to determine whether the inclusion of any potential interregional transmission projects in each region's regional transmission plan would be more efficient or cost-effective than regional

[1] A transmission developer is not responsible for determining the benefit-to-cost ratio referenced in Section 4.1.A.ii. in a project submittal. However, an interregional transmission project proposed for Interregional CAP must ultimately satisfy the benefit-to-cost ratio requirements in accordance with the provisions of Sections 4.1A.ii. and 4.3.

projects. Such analysis shall be consistent with accepted transmission planning practices of the respective regions and the methods utilized to produce each region's respective regional transmission plan(s). The Duke Transmission Provider will evaluate potential interregional transmission projects consistent with Sections 4, 5 and 20 of Attachment N-1.

3.5 Review of Proposed Interregional Transmission Projects: Initial coordination activities regarding potential interregional transmission projects will typically begin during the third quarter of each calendar year. The Duke Transmission Provider and MISO will exchange status updates regarding interregional transmission projects that are newly proposed or that are currently under consideration as needed. These status updates will generally include, if applicable: (i) an update of the region's evaluation of the proposal(s); (ii) the latest calculation of benefits (as identified pursuant to Section 4.2); and (iii) the anticipated timeline for future assessments.

3.6 Coordination of Assumptions Used in Joint Evaluation: The Duke Transmission Provider and MISO will coordinate assumptions and data used in joint evaluations, as necessary, including items such as:

(i) Expected timelines and milestones associated with the joint evaluation;

(ii) Study assumptions;

(iii) Models; and

(iv) Benefit calculations (as identified pursuant to Section 4.2).

4. Interregional Cost Allocation: If an interregional transmission project is proposed for Interregional CAP in the SERTP and MISO transmission planning regions, then the

following cost allocation and benefits calculations, as identified pursuant to Section 4.2, shall apply to the project:

4.1 Interregional Transmission Projects Proposed for Interregional Cost Allocation Purposes:

A. For a transmission project to be eligible for Interregional CAP within the SERTP and MISO, the project must:

i. Interconnect to transmission facilities in both the SERTP and MISO regions. The facilities to which the project is proposed to interconnect may be either existing facilities or transmission projects included in the regional transmission plan that are currently under development;

ii. Have a combined benefit-to-cost ratio of 1.25 or higher to the SERTP and MISO regions, as calculated in Section 4.3; and

iii. Meet the threshold and qualification criteria for transmission projects potentially eligible to be included in the respective regional transmission plans for purposes of cost allocation in MISO and the SERTP, pursuant to their respective regional transmission planning processes.

B. On a case-by-case basis, the Duke Transmission Provider and MISO may consider an interregional transmission project that does not satisfy all of the criteria specified in this Section 4.1 but that: (i) meets the threshold criteria for a project proposed to be included in the regional transmission plan for purposes of cost allocation in only one of the two regions; and (ii) would be interconnected to transmission facilities in both the SERTP and MISO regions. The facilities to which the project is proposed to

interconnect may be either existing facilities or transmission projects included in the regional transmission plan that are currently under development.

C. The transmission project must be proposed for purposes of cost allocation in both the SERTP and MISO. The project submittal must satisfy all criteria specified in the respective regional transmission processes, including the respective timeframes for submittals proposed for cost allocation purposes. If a project is proposed by a transmission developer, the transmission developer must also satisfy the qualification criteria specified by each region.

4.2 Calculation of Benefits for Interregional Transmission Projects Proposed for Interregional Cost Allocation Purposes: The benefits used to establish the allocation of costs of a transmission project proposed for Interregional CAP between the SERTP and MISO shall be determined as follows:

A. Each transmission planning region, acting through its regional transmission planning process, will evaluate proposals to determine whether the proposed project(s) addresses transmission needs that are currently being addressed with projects in its regional transmission plan and, if so, which projects in the regional transmission plan could be displaced by the proposed project(s).

B. Based upon its evaluation, each region will quantify its benefits based upon the transmission costs that each region is projected to avoid due to its

transmission projects being displaced by the proposed interregional transmission project as follows:

(i) for the SERTP, the total avoided costs of projects included in the then-current regional transmission plan that would be displaced if the proposed interregional transmission project was included; and

(ii) for MISO, the total avoided costs of projects included in the then-current regional transmission plan that would be displaced if the proposed interregional transmission project was included.

The benefits calculated pursuant to this Section 4.2 are not necessarily the same as the benefits used for purposes of *regional* cost allocation.

4.3. Calculation of Benefit-to-Cost Ratio for an Interregional Transmission Project Proposed for Interregional CAP:

Prior to any regional benefit-to-cost ratio calculation pursuant to either regional transmission planning process, the combined interregional benefit-to-cost ratio, referenced in Section 4.1.A, shall be calculated for an interregional transmission project proposed for Interregional CAP. Such calculation shall be performed by dividing the sum of the present value of the avoided project cost determined in accordance with Section 4.2.B.i for the SERTP region and the present value of avoided project cost determined in accordance with Section 4.2.B.ii for the MISO region by the present value of the proposed interregional transmission project's total project cost. The present values used in the cost calculation shall be based on a common date, comparable cost components, and the latest cost estimates used in

the evaluation of the interregional transmission project. The combined interregional benefit-to-cost ratio will be assessed in addition to, not in the place of, the SERTP's and MISO's respective regional benefit-to-cost ratio assessment(s) (if applicable) as specified in the respective regional processes.

4.4 Inclusion in Regional Transmission Plans: An interregional transmission project proposed for Interregional CAP in the transmission planning regions of the SERTP and MISO will be included in the respective regional transmission plans for purposes of cost allocation after:

A. Each region has performed all evaluations, as prescribed in its regional transmission planning process, necessary for a project to be included in its regional transmission plan for purposes of cost allocation including any regional benefit-to-cost ratio calculations. Each region shall utilize the benefit calculation(s) as defined in such region's regional transmission planning process (for purposes of clarity, these benefits are not necessarily the same as the benefits determined pursuant to Section 4.2). Each region shall utilize the cost calculation(s) as defined in such region's regional transmission planning process. The anticipated percentage allocation of costs of the interregional transmission project to each region shall be based upon the ratio of the region's benefits to the sum of the benefits, both as determined pursuant to Section 4.2, identified for both the SERTP and MISO.

B. Each region has obtained all approvals, as prescribed in its regional process, necessary for a project to be included in the regional transmission plan for purposes of regional cost allocation.

4.5 Allocation of Costs Between the SERTP and MISO Regions: The cost of an interregional transmission project, selected for purposes of cost allocation in the regional transmission plans of both the SERTP and MISO, will be allocated as follows:

A. Each region will be allocated a portion of the interregional transmission project's costs in proportion to such region's benefit as calculated pursuant to Section 4.2 to the sum of the benefits identified for both the SERTP and MISO calculated pursuant to Section 4.2.

- The benefits used for this determination shall be based upon the benefit calculation most recently performed – pursuant to the method described in Section 4.2 – before each region included the project in its regional transmission plan for purposes of cost allocation and as approved by each region.

B. Costs allocated to each region shall be further allocated within each region pursuant to the cost allocation methodology contained in its regional transmission planning process.

4.6 Milestones of Required Steps Necessary to Maintain Status as Being Selected for Interregional Cost Allocation Purposes: Once selected in the respective regional transmission plans for purposes of cost allocation, the SERTP Sponsors that will be allocated costs of the transmission project, MISO, and the

transmission developer(s) must mutually agree upon an acceptable development schedule including milestones by which the necessary steps to develop and construct the interregional transmission project must occur. These milestones may include (to the extent not already accomplished) obtaining all necessary rights of way and requisite environmental, state, and other governmental approvals and executing a mutually-agreed upon contract(s) between the applicable SERTP Sponsors, MISO and the transmission developer. If such critical steps are not met by the specified milestones and then afterwards maintained, then the Duke Transmission Provider and MISO may remove the transmission project from the selected category in the regional transmission plans for purposes of cost allocation.

4.7 Interregional Transmission Project Contractual Arrangements: The contracts referenced in Section 4.6 will address terms and conditions associated with the development of the proposed interregional transmission project included in the regional transmission plans for purposes of cost allocation, including but not limited to:

(i) Engineering, procurement, construction, maintenance, and operation of the proposed transmission project, including coordination responsibilities of the parties;

(ii) Emergency restoration and repair;

(iii) The specific financial terms and specific total amounts to be charged by the transmission developer of the transmission project to each beneficiary, as agreed to by the parties;

(iv) Creditworthiness and project security requirements;

(v) Milestone reporting, including schedule of projected expenditures;

(vi) Reevaluation of the transmission project; and

(vii) Non-performance or abandonment.

4.8 Removal from Regional Transmission Plans: An interregional transmission project may be removed from the Duke Transmission Provider's or MISO's regional transmission plan(s) for Interregional CAP: (i) if the transmission developer fails to meet developmental milestones; (ii) pursuant to the reevaluation procedures specified in the respective regional transmission planning processes; or (iii) if the project is removed from one of the region's regional transmission plans pursuant to the requirements of its regional transmission planning process.

A. The Duke Transmission Provider shall notify MISO if an interregional transmission project or a portion thereof is likely to be, and/or is actually removed from its regional transmission plan.

5. Transparency

5.1 Stakeholders will have an opportunity to provide input and feedback within the respective regional transmission planning processes of the SERTP and MISO related to interregional transmission projects identified, analysis performed, and any determination/results. Stakeholders may participate in either or both regions' regional transmission planning processes to provide their input and feedback regarding the interregional coordination between the SERTP and MISO.

5.2 At the fourth quarter SERTP Summit, or as necessary due to current activity of proposed interregional transmission projects, the Duke Transmission Provider will provide status updates of interregional activities including:

(i) Facilities to be evaluated;

(ii) Analysis performed; and

(iii) Determinations/results.

5.3 The Duke Transmission Provider will post a list on the Regional Planning Website of interregional transmission projects proposed for purposes of cost allocation in both the SERTP and MISO regions that are not eligible for consideration because they do not satisfy the regional project threshold criteria of one or both of the regions as well as post an explanation of the thresholds the proposed interregional projects failed to satisfy.

ATTACHMENT N-1 - PJM

Interregional Transmission Coordination Between the SERTP and PJM Regions

The Duke Transmission Provider, through its regional transmission planning process, coordinates with the PJM Interconnection, LLC ("PJM") as the transmission provider and planner for the PJM region to address transmission planning coordination issues related to interregional transmission projects. The interregional transmission coordination procedures include a detailed description of the process for coordination between public utility transmission providers in the SERTP and PJM to identify possible interregional transmission projects that could address transmission needs more efficiently or cost-effectively than transmission projects included in the respective regional transmission plans. The interregional transmission coordination procedures are hereby provided in this Attachment N-1 - PJM with additional materials provided on the Regional Planning website.

The Duke Transmission Provider and PJM shall:

(1) Coordinate and share the results of the SERTP's and PJM's regional transmission plans to identify possible interregional transmission projects that could address transmission needs more efficiently or cost-effectively than separate regional transmission projects;

(2) Identify and jointly evaluate transmission projects that are proposed to be located in both transmission planning regions;

(3) Exchange, at least annually, planning data and information; and

(4) Maintain a website and e-mail list for the communication of information related to the coordinated planning process.

The Duke Transmission Provider and PJM developed a mutually agreeable method for allocating between the two transmission planning regions the costs of new interregional transmission projects that are located within both transmission planning regions. Such cost allocation method satisfies the six interregional cost allocation principles set forth in Order No. 1000 and are included in this Attachment N-1 - PJM.

For purposes of this Attachment N-1 - PJM, the SERTP's transmission planning process is the process described in Attachment N-1 of this Tariff; PJM's regional transmission planning process is the process described in Schedule 6 of PJM's OATT. References to the respective transmission planning processes in this Attachment N-1 - PJM are intended to identify the activities described in those tariff provisions. Likewise, references to the respective regional transmission plans in this Attachment N-1 - PJM are intended to identify, for PJM, the PJM Regional Transmission Expansion Plan ("RTEP"), as defined in applicable PJM documents and, for the Duke Transmission Provider, the SERTP regional transmission plan, which includes the Duke Transmission Provider's ten (10) year transmission expansion plan. Unless noted otherwise, Section references in this Attachment N-1 - PJM refer to Sections within this Attachment N-1 - PJM.

Nothing in this Attachment N-1 - PJM is intended to affect the terms of any bilateral planning or operating agreements between transmission owners and/or transmission service providers that exist as of the effective date of this Attachment N-1 - PJM or that are executed at some future date.

INTERREGIONAL TRANSMISSION PLANNING PRINCIPLES

Representatives of the SERTP and PJM will meet no less than once per year to facilitate the interregional coordination procedures described below (as applicable). Representatives of the SERTP and PJM may meet more frequently during the evaluation of project(s) proposed for purposes of interregional cost allocation between the SERTP and PJM. For purposes of this Attachment N-1 - PJM, an "interregional transmission project" means a facility or set of facilities that would be physically located in both the SERTP and PJM regions and would interconnect to transmission facilities in both the SERTP and PJM regions. The facilities to which the project is proposed to interconnect may be either existing transmission facilities or transmission projects included in the regional transmission plan that are currently under development.

1. Coordination

1.1 Review of Respective Regional Transmission Plans: Biennially, the Duke Transmission Provider and PJM shall review each other's current regional transmission plan(s) and engage in the data exchange and joint evaluation described in Sections 2 and 3.

- The review of each region's regional transmission plan(s), which plans include the transmission needs and planned upgrades of the transmission providers in each region, shall occur on a mutually agreeable timetable, taking into account each region's transmission planning process timeline.

1.2 Review of Proposed Interregional Transmission Projects: The Duke Transmission Provider and PJM will also coordinate with regard to the evaluation of interregional transmission projects identified by the Duke Transmission Provider and PJM as well as interregional transmission projects proposed for

Interregional Cost Allocation Purposes ("Interregional CAP"), pursuant to Sections 3 and 5, below. Initial coordination activities regarding new interregional proposals will typically begin during the third calendar quarter. The Duke Transmission Provider and PJM will exchange status updates for new interregional transmission project proposals or proposals currently under consideration as needed. These status updates will generally include, if applicable: (i) an update of the region's evaluation of the proposal; (ii) the latest calculation of Regional Benefits (as defined in Section 5.2); (iii) the anticipated timeline for future assessments; and (iv) reevaluations related to the proposal.

1.3 Coordination of Assumptions Used in Joint Evaluation: The Duke Transmission Provider and PJM will coordinate assumptions used in joint evaluations, as necessary, which includes items such as:

- Expected timelines/milestones associated with the joint evaluation
- Study assumptions
- Regional benefit calculations.

1.4 Posting of Materials on Regional Planning Websites: The Duke Transmission Provider and PJM will coordinate with respect to the posting of materials related to the interregional coordination procedures described in this Attachment N-1 on each region's regional planning website.

2. Data Exchange

2.1 At least annually, the Duke Transmission Provider and PJM shall exchange power-flow models and associated data used in the regional transmission planning processes to develop their respective then-current regional transmission plan(s).

This exchange will occur when such data is available in each of the transmission planning processes, typically during the first calendar quarter. Additional transmission-based models and data may be exchanged between the Duke Transmission Provider and PJM as necessary and if requested. For purposes of the interregional coordination activities outlined in this Attachment N-1 - PJM, only data and models used in the development of the Duke Transmission Provider's and PJM's then-current regional transmission plans and used in their respective regional transmission planning processes will be exchanged. This data will be posted on the pertinent regional transmission planning process' websites, consistent with the posting requirements of the respective regional transmission planning processes, and is considered CEII. The Duke Transmission Provider shall notify PJM of such posting.

2.2 The SERTP regional transmission plans will be posted on the Regional Planning website pursuant to the Duke Transmission Provider's regional transmission planning process. The Duke Transmission Provider will also notify PJM of such posting so PJM may retrieve these transmission plans. PJM will exchange its then-current regional plan(s) in a similar manner according to its regional transmission planning process.

3. Joint Evaluation

3.1 Identification of Interregional Transmission Projects: The Duke Transmission Provider and PJM shall exchange planning models and data and current regional transmission plans as described in Section 2. The Duke Transmission Provider and PJM will review one another's then-current regional transmission plan(s) in

accordance with the coordination procedures described in Section 1 and their respective regional transmission planning processes. If through this review, the Duke Transmission Provider and PJM identify a potential interregional transmission project that could be more efficient or cost effective than projects included in the respective regional plans, the Duke Transmission Provider and PJM will jointly evaluate the potential project pursuant to Section 3.3.

3.2 Identification of Interregional Transmission Projects by Stakeholders: Stakeholders may propose projects that may be more efficient or cost-effective than projects included in the Duke Transmission Provider's and PJM's regional transmission plans pursuant to the procedures in each region's regional transmission planning processes. The Duke Transmission Provider and PJM will evaluate interregional transmission projects proposed by stakeholders pursuant to Section 3.3.

3.3 Evaluation of Interregional Transmission Projects: The Duke Transmission Provider and PJM shall act through their respective regional transmission planning processes to evaluate potential interregional transmission projects and to determine whether the inclusion of any potential interregional transmission projects in each region's regional transmission plan would be more efficient or cost-effective than projects included in the respective then-current regional transmission plans. Such analysis shall be consistent with accepted planning practices of the respective regions and the methods utilized to produce each region's respective regional transmission plan(s). The Duke Transmission Provider will evaluate potential interregional transmission projects consistent with

Sections 4, 5, and 20 of Attachment N-1. To the extent possible and as needed, assumptions and models will be coordinated between the Duke Transmission Provider and PJM, as described in Section 1. Data shall be exchanged to facilitate this evaluation using the procedures described in Section 2.

3.4 Evaluation of Interregional Transmission Projects Proposed for Interregional Cost Allocation Purposes:

Interregional transmission projects proposed for Interregional CAP must be submitted in both the SERTP and PJM regional transmission planning processes. The project submittals must satisfy the applicable requirements for submittal of interregional transmission projects, including those in Sections 5.1(A) and 5.1(B). The submittals in the respective regional transmission planning processes must identify the project proposal as interregional in scope and identify SERTP and PJM as the regions in which the project is proposed to interconnect. The Duke Transmission Provider will determine whether the submittal for the proposed interregional transmission project satisfies all applicable requirements. Upon finding that the project submittal satisfies all such applicable requirements, the Duke Transmission Provider will notify PJM. Upon both regions so notifying one another that the project is eligible for consideration pursuant to their respective regional transmission planning processes, the Duke Transmission Provider and PJM will jointly evaluate the proposed interregional projects.

3.4.1 If an interregional transmission project is proposed in the SERTP and PJM for Interregional CAP, the initial evaluation of the project will typically begin during the third calendar quarter, with analysis conducted in the

same manner as analysis of interregional projects identified pursuant to Sections 3.1 and 3.2. Further evaluation shall also be performed pursuant to this Section 3.4. Projects proposed for Interregional CAP shall also be subject to the requirements of Section 5.

3.4.2 Each region, acting through its regional transmission planning process, will evaluate proposals to determine whether the interregional transmission project(s) proposed for Interregional CAP addresses transmission needs that are currently being addressed with projects in its regional transmission plan(s) and, if so, which projects in the regional transmission plan(s) could be displaced by the proposed project(s).

3.4.3 Based upon its evaluation, each region will quantify a Regional Benefit based upon the transmission costs that each region is projected to avoid due to its transmission projects being displaced by the proposed project. For purposes of this Attachment N-1 - PJM, "Regional Benefit" means: (i) for the Duke Transmission Provider, the total avoided costs of projects included in the then-current regional transmission plan that would be displaced if the proposed interregional transmission project was included and (ii) for PJM, the total avoided costs of projects included in the then-current regional transmission plan that would be displaced if the proposed interregional transmission project was included. The Regional Benefit is not necessarily the same as the benefits used for purposes of *regional* cost allocation.

3.5 Inclusion of Interregional Projects Proposed for Interregional CAP in Regional Transmission Plans: An interregional transmission project proposed for Interregional CAP in the SERTP and PJM will be included in the respective regional plans for purposes of cost allocation only after it has been selected by both the SERTP and PJM regional processes to be included in their respective regional plans for purposes of cost allocation.

3.5.1 To be selected in both the SERTP and PJM regional plans for purposes of cost allocation means that each region has performed all evaluations, as prescribed in its regional transmission planning processes, necessary for a project to be included in its regional transmission plans for purposes of cost allocation.

- For the SERTP: All requisite approvals are obtained, as prescribed in the SERTP regional transmission planning process, necessary for a project to be included in the SERTP regional transmission plan for purposes of cost allocation. This includes any requisite regional benefit to cost ("BTC") ratio calculations performed pursuant to the respective regional transmission planning processes. For purposes of the SERTP, the anticipated allocation of costs of the interregional transmission project for use in the regional BTC ratio calculation shall be based upon the ratio of the SERTP's Regional Benefit to the sum of the Regional Benefits identified for both the SERTP and PJM; and

- For PJM: All requisite approvals are obtained, as prescribed in the respective regional transmission planning processes, necessary for a project to be included in the regional transmission plans for purposes of cost allocation.

3.6 Removal from Regional Plans: An interregional transmission project may be removed from the SERTP's or PJM's regional plan for purposes of cost allocation: (i) if the developer fails to meet developmental milestones; (ii) pursuant to the reevaluation procedures specified in the respective regional transmission planning processes; or (iii) if the project is removed from one of the region's regional transmission plan(s) pursuant to the requirements of its regional transmission planning process.

3.6.1 The Duke Transmission Provider shall notify PJM if an interregional project or a portion thereof is likely to be removed from its regional transmission plan.

4. Transparency

4.1 The Duke Transmission Provider shall post procedures for coordination and joint evaluation on the Regional Planning website.

4.2 Access to the data utilized will be made available through the Regional Planning website subject to the appropriate clearance, as applicable (such as CEII and confidential non-CEII). Both planning regions will make available, on their respective regional websites, links to where stakeholders can register (if applicable/available) for the stakeholder committees or distribution lists of the other planning region.

4.3 At the fourth quarter SERTP Summit, or as necessary due to current activity of proposed interregional transmission projects, the SERTP will provide status updates of interregional activities including:

- Facilities to be evaluated
- Analysis performed
- Determinations/results.

4.4 Stakeholders will have an opportunity to provide input and feedback within the respective regional planning processes of SERTP and PJM related to interregional facilities identified, analysis performed, and any determination/results.

Stakeholders may participate in either or both regions' regional planning processes to provide their input and feedback regarding the interregional coordination between the SERTP and PJM.

4.5 The Duke Transmission Provider will post a list on the Regional Planning Website of interregional transmission projects proposed for purposes of cost allocation in both the SERTP and PJM that are not eligible for consideration because they do not satisfy the regional project threshold criteria of one or both of the regions as well as post an explanation of the thresholds the proposed interregional project failed to satisfy.

5. Cost Allocation

5.1 Proposal of Interregional Transmission Projects for Interregional CAP: For an interregional transmission project to be eligible for Interregional CAP within the SERTP and PJM regions, all of the following criteria must be met:

A. The interregional transmission project must be interregional in nature, which requires that it must:

- Be physically located in both the SERTP region and the PJM region;
- Interconnect to transmission facilities in both the SERTP and PJM regions. The facilities to which the project is proposed to interconnect may be either existing facilities or transmission projects included in the regional transmission plan that are currently under development; and
- Meet the threshold criteria for transmission projects potentially eligible to be included in the regional transmission plans for purposes of cost allocation in both the SERTP and PJM regions, pursuant to their respective regional transmission planning processes.

B. The interregional transmission project must be proposed for purposes of cost allocation in both the SERTP and PJM regions.

- The transmission developer and project submittal must satisfy all criteria specified in the respective regional transmission processes; and
- The proposal should be submitted in the timeframes outlined in the respective regional transmission planning processes.

C. The interregional transmission project must be selected in the regional transmission plans of both the SERTP and PJM regions.

- The costs of the interregional transmission project eligible for interregional cost allocation shall only be allocated to a region if that

region has selected the interregional transmission project in its regional transmission plan for purposes of cost allocation; and

- No cost shall be allocated to a region that has not selected the interregional transmission project in its regional transmission plan for purposes of cost allocation.

5.2 Allocation of Costs for Interregional Transmission Projects Between the SERTP and PJM Regions: The cost of an interregional transmission project selected for purposes of cost allocation in the regional transmission plans of both the SERTP and PJM regions shall be allocated for Interregional CAP to those regions as provided below:

A. The share of the costs of an interregional transmission project allocated to a region will be determined by the ratio of the present value(s) of the estimated costs of such region's displaced regional transmission project(s) to the total of the present values of the estimated costs of the displaced regional transmission projects in all regions that have selected the interregional transmission project in their regional transmission plans for purposes of cost allocation. The present values used in the cost allocation shall be based on a common date, comparable cost components, and the latest cost estimates used in the determination to include the interregional transmission project in the respective regional plans for purposes of cost allocation. The applicable discount rate(s) used for the SERTP region for interregional cost allocation purposes will be based upon the after-tax weighted average cost of capital of the SERTP transmission owners whose

projects would be displaced by the proposed interregional transmission project. The applicable discount rate for the PJM region shall be the discount rate included in the assumptions that are reviewed with the PJM Board of Managers each year for use in the economic planning process.

B. When all or a portion of an interregional transmission project is to be located within a region in which there is no displaced regional transmission project, such region may, at its sole discretion, select the interregional transmission project for inclusion in its regional transmission plan; provided, however, that no portion of the costs of the interregional transmission project shall be allocated to such region pursuant to Section 5.2.A.

C. Nothing in this Section 5 shall govern the further allocation of costs allocated to a region pursuant to this Section 5.2 within such region.

D. The following example illustrates the cost allocation provisions in Section 5.2.A:

- Regions A and B, through the joint evaluation process prescribed in Section 3.4 of this Attachment N-1 - PJM have included Transmission Project Z in their respective regional plans for purposes of cost allocation. Transmission Project Z was determined to address both regions' needs more efficiently or cost effectively than Transmission Project X in Region A and Transmission Project Y in Region B.

- The estimated cost of Transmission Projects X and Y are Cost (X) and Cost (Y) respectively. As described in Section 5.2.A, these costs shall be based upon common cost components.
- The number of years from the common present value date to the year associated with the cost estimates of Transmission Projects X and Y are N(X) and N(Y) respectively.
- Recognizing that the regions may have different discount rates, for purposes of this example D_A is the discount rate used for Transmission Project X and D_B is the discount rate used for Transmission Project Y.
- Based on the foregoing assumptions and the allocation of costs based upon displaced regional transmission projects as prescribed in Section 5.2.A, the following illustrative formulas would be used:
  - Present Value of Cost (X) = PV Cost (X) = Cost (X) / $(1+D_A)^{N(X)}$
  - Present Value of Cost (Y) = PV Cost (Y) = Cost (Y) / $(1+D_B)^{N(Y)}$
  - Cost Allocation to Region A = PV Cost (X) / [PV Cost (X) + PV Cost (Y)]
  - Cost Allocation to Region B = PV Cost (Y) / [PV Cost (X) + PV Cost (Y)]
- Applying the above formulas, if:
  - Cost (X) = $60 Million and N(X) = 8.25 years

- Cost (Y) = $40 Million and N(Y) = 4.50 years
- D_A = 7.5% per year
- D_B = 7.4% per year

o Then:

- PV Cost (X) = 60/(1+0.075)8.25 = 33.0 Million
- PV Cost (Y) = 40/(1+0.074)4.50 = 29.0. Million
- Cost Allocation to Region A = 33.0 / (33.0 + 29.0) = 53.2% of the cost of Transmission Project Z
- Cost Allocation to Region B = 29.0 / (33.0 + 29.0) = 46.8% of the cost of Transmission Project Z

5.3 Merchant Transmission and Transmission Owner Projects: Nothing in this Section 5 shall preclude the development of interregional transmission projects that are funded by merchant transmission developers or by individual transmission owners.

5.4 Exclusivity with Respect to Interregional Transmission Projects Selected for Interregional CAP: The following provisions shall apply regarding other cost allocation arrangements:

A. Except as provided in Section 5.4.B, the provisions in this Section 5 are the exclusive means by which any costs of an interregional transmission project selected for Interregional CAP between the SERTP and PJM regions may be allocated between or among those regions.

B. A transmission owner(s) or transmission developer(s) may propose to fund or allocate, on a voluntary basis, the cost of an interregional transmission

project selected for Interregional CAP using an allocation other than the allocation that results from the methodology set forth in Section 5.2, provided that, should the allocation of cost of such interregional transmission project be subject to the Federal Energy Regulatory Commission's ("FERC") jurisdiction, such allocation proposal is accepted for filing by FERC in accordance with the filing rights with respect to cost allocation set forth in Section 5.5 of this Attachment N-1 - PJM and provided further that no allocation shall be made to any region that has not agreed to that allocation.

5.5 Section 205 Filing Rights with Respect to Interregional Transmission Projects Selected for Interregional CAP: Solely with respect to interregional transmission projects evaluated under this Attachment N-1 - PJM and selected by the SERTP and PJM regional transmission planning processes for purposes of Interregional CAP, the following provisions shall apply:

A. Except as provided in Sections 5.4 and 5.5.B of this Attachment N-1 - PJM, nothing in this Section 5 will convey, expand, limit or otherwise alter any rights of the transmission owners, transmission developers or other market participants to submit filings under Section 205 of the Federal Power Act ("FPA") regarding cost allocation or any other matter.

B. The cost allocation provisions in this Section 5 shall not be modified under Section 205 of the FPA without the mutual consent of the holders of the FPA Section 205 rights with respect to interregional cost allocation in the SERTP and PJM regions.

5.6 Consequences to Other Regions from Interregional Transmission Projects: Except as provided in this Section 5, or in other documents, agreements or tariffs on file with FERC, neither the SERTP region nor the PJM region shall be responsible for compensating another planning region for required upgrades or for any other consequences in another planning region associated with interregional transmission projects identified pursuant to this Attachment N-1 – PJM.

ATTACHMENT N-1 - SCRTP

Interregional Transmission Coordination Between the SERTP and SCRTP Regions

The Duke Transmission Provider, through its regional transmission planning process coordinates with the public utility transmission providers in the South Carolina Regional Transmission Planning Process region ("SCRTP") to address transmission planning coordination issues related to interregional transmission facilities. The interregional transmission coordination procedures include a detailed description of the process for coordination between the public utility transmission providers in the SERTP and the SCRTP (i) with respect to an interregional transmission facility that is proposed to be located in both transmission planning regions and (ii) to identify possible interregional transmission facilities that could address transmission needs more efficiently or cost effectively than transmission facilities included in the respective regional or local transmission plans. The interregional transmission coordination procedures are hereby provided in this Attachment N-1 - SCRTP with additional materials provided on the Regional Planning website.

The Duke Transmission Provider ensures that the following requirements are included in the interregional transmission coordination procedures:

(1) A commitment to coordinate and share the results of the SERTP and the SCRTP regional transmission plans to identify possible interregional transmission projects that could address transmission needs more efficiently or cost-effectively than separate transmission facilities, as well as a procedure for doing so;

(2) A formal procedure to identify and jointly evaluate transmission facilities that are proposed to be located in both transmission planning regions;

(3) A duty to exchange, at least annually, planning data and information; and

(4) A commitment to maintain a website or e-mail list for the communication of information related to the coordinated planning process.

The Duke Transmission Provider has worked with the transmission providers located in the SCRTP to develop a mutually agreeable cost allocation method for new interregional transmission facilities that are located within both transmission planning regions. Such cost allocation methodology, which satisfies the six interregional cost allocation principles set forth in Order No. 1000, is included in this Attachment N-1 - SCRTP.

For purposes of this Attachment N-1 - SCRTP, the SERTP regional transmission planning process is the process described in Attachment N-1 of this Tariff; the SCRTP's regional transmission planning process is the process described in the relevant Attachment Ks (or analog tariff sections) of the public utility transmission providers in the SCRTP. References to the respective regional transmission planning processes in this Attachment N-1 - SCRTP are intended to identify the activities described in those tariff provisions. Unless noted otherwise, Section references in this Attachment N-1 - SCRTP refer to Sections within this Attachment N-1 - SCRTP.

INTERREGIONAL TRANSMISSION PLANNING PRINCIPLES

Representatives of the SERTP and the SCRTP will meet no less than once per year to facilitate the interregional coordination procedures described below (as applicable). Representatives of the SERTP and the SCRTP may meet more frequently during the evaluation of project(s) proposed for purposes of interregional cost allocation between the SERTP and the SCRTP.

1. Coordination

1.1 Review of Respective Regional and Local plans: Biennially, the Duke Transmission Provider and the public utility transmission providers in the SCRTP shall review each other's current regional and local plan(s) and engage in the data exchange and joint evaluation described in Sections 2 and 3.

1.2 Review of Proposed Interregional Projects: The Duke Transmission Provider and the public utility transmission providers in the SCRTP will coordinate with regard to the evaluation of interregional transmission projects identified by the Duke Transmission Provider and the public utility transmission providers in the SCRTP as well as interregional transmission projects proposed for Interregional Cost Allocation Purposes ("Interregional CAP"), pursuant to Sections 3 and 4, below. Initial coordination activities regarding new interregional proposals will typically begin during the third calendar quarter. The Duke Transmission Provider and the public utility transmission providers in the SCRTP will typically exchange status updates for new interregional transmission project proposals or proposals currently under consideration every six (6) months, or as needed. These status updates will include, if applicable: (i) an update of the region's evaluation of the proposal; (ii) the latest calculation of Regional Benefits (as defined in Section 4.2); (iii) the anticipated timeline for future assessments; and (iv) reevaluations related to the proposal.

1.3 Coordination of Assumptions Used in Joint Evaluation: The Duke Transmission Provider and the public utility transmission providers in the SCRTP will coordinate assumptions used in joint evaluations, as necessary, which include

items such as:

- Expected timelines/milestones associated with the joint evaluation
- Study assumptions
- Regional benefit calculations.

2. Data Exchange

2.1 At least annually, the Duke Transmission Provider and the public utility transmission providers in the SCRTP shall exchange power-flow models and associated data used in the regional transmission planning processes to develop their respective then-current regional and local transmission plan(s). This exchange will typically occur by the beginning of each region's transmission planning cycle. Additional transmission-based models and data may be exchanged between the Duke Transmission Provider and the public utility transmission providers in the SCRTP as necessary and if requested. For purposes of the interregional coordination activities outlined in this Attachment N-1 - SCRTP, data and models used in the development of the SERTP and the SCRTP then-current regional and local transmission plans and used in their respective regional transmission planning processes will be exchanged. This data will be posted on the pertinent regional transmission planning process' website, consistent with the posting requirements of the respective regional transmission planning processes, and may be treated as CEII as appropriate. The Duke Transmission Provider shall notify the public utility transmission providers in the SCRTP of such posting.

2.2 The SERTP regional and local transmission plans will be posted on the Regional

Planning website pursuant to the Duke Transmission Provider's regional transmission planning process. The Duke Transmission Provider will also notify the public utility transmission providers in the SCRTP of such posting. The SCRTP will exchange its then-current regional and local plan(s) in a similar manner according to its regional transmission planning process.

3. Joint Evaluation

3.1 Identification of Interregional Projects: The Duke Transmission Provider and the public utility transmission providers in the SCRTP shall exchange planning models and data and current regional and local transmission plans as described in Section 2. The Duke Transmission Provider and the public utility transmission providers in the SCRTP will review one another's then-current regional and local plan(s) in accordance with the coordination procedures described in Section 1 and their respective regional transmission planning processes. If, through this review, the Transmission Provider and the public utility transmission providers in the SCRTP identify a potential interregional project that could be more efficient or cost effective than projects included in the respective regional or local plans, the Duke Transmission Provider and the public utility transmission providers in the SCRTP will jointly evaluate the potential project pursuant to Section 3.4.

3.2 Identification of Interregional Projects by Stakeholders: Stakeholders may propose projects that may be more efficient or cost-effective than projects included in the SERTP and the SCRTP regional or local transmission plans. Stakeholders may propose these projects pursuant to the procedures in each region's regional transmission planning processes. The Duke Transmission

Provider and the public utility transmission providers in the SCRTP will evaluate interregional projects proposed by stakeholders pursuant to Section 3.4.

3.3 Identification of Interregional Projects by Developers: Interregional transmission projects proposed for potential Interregional CAP must be submitted in both the SERTP and SCRTP regional transmission planning processes. The project submittal must satisfy the requirements of Section 4.1. The submittal must identify the potential transmission project as interregional in scope and identify the SERTP and SCRTP as regions in which the project is proposed to interconnect. The Duke Transmission Provider will verify whether the submittal for the potential interregional transmission project satisfies all applicable requirements. Upon finding that the proposed interregional transmission project satisfies all such applicable requirements, the Duke Transmission Provider will notify the public utility transmission provider(s) in the SCRTP. Once the potential project has been proposed through the regional transmission planning processes in both regions, and upon both regions so notifying one another that the project is eligible for consideration pursuant to their respective regional transmission planning processes, the Duke Transmission Provider and the public utility transmission providers in the SCRTP will jointly evaluate the proposed interregional projects pursuant to Sections 3 and 4.

3.4 Evaluation of Interregional Projects: The Duke Transmission Provider and the public utility transmission providers in the SCRTP shall act through their respective regional transmission planning processes to evaluate potential interregional transmission projects and to determine whether the inclusion of any

potential interregional transmission projects in each region's regional transmission plan would be more efficient or cost-effective than projects included in their respective then-current regional or local transmission plans. Such analysis shall be consistent with accepted transmission planning practices of the respective regions and the methods utilized to produce each region's respective regional and local transmission plan(s). The Duke Transmission Provider will evaluate potential interregional transmission projects consistent with Sections 4, 5 and 20 of Attachment N-1. To the extent possible and as needed, assumptions and models will be coordinated between the Transmission Provider and the public utility transmission providers in the SCRTP as described in Section 1. Data shall be exchanged to facilitate this evaluation using the procedures described in Section 2.

3.5 Initial Evaluation of Interregional Projects Proposed for Interregional Cost Allocation Purposes: If an interregional project is proposed in the SERTP and the SCRTP for Interregional CAP, the initial evaluation of the project will typically begin during the third calendar quarter, with analysis conducted in the same manner as analysis of interregional projects identified pursuant to Sections 3.1 and 3.2. Projects proposed for Interregional CAP shall also be subject to the requirements of Section 4.

4. Cost Allocation: If an interregional project is proposed for Interregional CAP in the SERTP and the SCRTP, then the following methodology applies:

4.1 Interregional Projects Proposed for Interregional Cost Allocation Purposes: For a transmission project to be considered for Interregional CAP within the

SERTP and the SCRTP, the following criteria must be met:

A. The transmission project must be interregional in nature:

- Be located in both the SERTP and the SCRTP regions;
- Interconnect to transmission facilities in both the SERTP and SCRTP regions. The facilities to which the project is proposed to interconnect may be either existing transmission facilities or transmission projects included in the regional transmission plan that are currently under development;
- Meet the qualification criteria for transmission projects potentially eligible to be included in the regional transmission plans for purposes of cost allocation in both the SERTP and the SCRTP, pursuant to their respective regional transmission planning processes.

B. On a case-by-case basis, the Duke Transmission Provider and the public utility transmission providers in the SCRTP will consider a transmission project that does not satisfy all of the criteria specified in Section 4.1.A but: (i) meets the threshold criteria for a project proposed to be included in the regional transmission plan for purposes of cost allocation in only one of the two regions; (ii) would be located in both regions; and (iii) would be interconnected to transmission facilities in both the SERTP and SCRTP regions. The facilities to which the project is proposed to interconnect may be either existing transmission facilities or transmission projects included in the regional transmission plan that are currently under development.

C. The transmission project must be proposed for purposes of cost allocation in both the SERTP and the SCRTP.

- The transmission developer and project submittal must satisfy all criteria specified in the respective regional transmission processes.
- The proposal should be submitted in the timeframes outlined in the respective regional transmission planning processes.

4.2 Evaluation of Interregional Projects Proposed for Interregional Cost Allocation Purposes: Interregional projects proposed for Interregional CAP in the SERTP and the SCRTP shall be evaluated within the respective regions as follows:

A. Each region, acting through its regional transmission planning process, will evaluate proposals to determine whether the proposed project(s) addresses transmission needs that are currently being addressed with projects in its regional or local transmission plan and, if so, which projects in the regional or local transmission plan could be displaced by the proposed project(s).

B. Based upon its evaluation, each region will quantify a Regional Benefit based upon the transmission costs that each region is projected to avoid due to its transmission project(s) being displaced by the proposal.

- For purposes of this Attachment N-1 - SCRTP, "Regional Benefit" means the total avoided capital costs of projects included in the then-current regional or local transmission plans that would be displaced if the proposed interregional transmission project was included. The

Regional Benefit is not necessarily the same as the benefits used for purposes of *regional* cost allocation.

4.3. Calculation of Benefit to Cost Ratio: Each region will calculate a regional benefit to cost ("BTC") ratio consistent with its regional process and compare the BTC ratio to its respective threshold to determine if the interregional project appears to be more efficient or cost effective than those projects included in its current regional or local transmission plan. For purposes of this BTC ratio evaluation:

A. Each region shall utilize the benefit calculation(s) as defined in such region's regional transmission planning process (for purposes of clarity, these benefits are not necessarily the same as the Regional Benefits determined pursuant to Section 4.2).

B. Each region shall utilize the cost calculation(s) as defined in such region's regional transmission planning process. The anticipated percentage allocation of costs of the interregional project to each region shall be based upon the ratio of the region's Regional Benefit to the sum of the Regional Benefits identified for both the SERTP and the SCRTP. The Regional Benefits shall be determined pursuant to the methodology described in Section 4.2.

Regional BTC assessments shall be performed in accordance with each region's regional transmission planning process, including but not limited to subsequent calculations and reevaluations.

4.4 Inclusion in Regional Transmission Plans: An interregional project proposed for Interregional CAP in the SERTP and the SCRTP will be included in the respective regional transmission plans for purposes of cost allocation after:

A. Each region has performed all evaluations, as prescribed in its regional transmission planning process, necessary for a project to be included in its regional transmission plan for purposes of cost allocation.

- This includes any regional BTC ratio calculations performed pursuant to Section 4.3; and

B. Each region; has obtained all approvals, as prescribed in its regional process, necessary for a project to be included in the regional transmission plan for purposes of cost allocation have been obtained.

4.5 Allocation of Costs Between the SERTP and the SCRTP: The cost of an interregional project, selected for purposes of cost allocation in the regional transmission plans of both the SERTP and the SCRTP, will be allocated as follows:

A. Each region will be allocated a portion of the interregional project's costs in proportion to such region's Regional Benefit to the sum of the Regional Benefits identified for both the SERTP and the SCRTP.

- The Regional Benefits used for this determination shall be based upon the last Regional Benefit calculation performed – pursuant to the method described in Section 4.2. – before each region included the project in its regional transmission plan for purposes of cost allocation and as approved by each region.

B. Costs allocated to each region shall be further allocated within each region pursuant to the cost allocation methodology contained in its regional transmission planning process.

4.6 Removal from Regional Plans: An interregional project may be removed from the SERTP or the SCRTP regional plan for purposes of cost allocation: (i) if the developer fails to meet developmental milestones; (ii) pursuant to the reevaluation procedures specified in the respective regional transmission planning processes; or (iii) if the project is removed from one of the region's regional transmission plans pursuant to the requirements of its regional transmission planning process.

A. The Transmission Provider shall notify the public utility transmission providers in the SCRTP if an interregional project or a portion thereof is likely to be removed from its regional transmission plan.

4.7 Abandonment: If an interregional project is abandoned, the impacted Duke Transmission Provider(s) may seek to complete the interregional project (in accordance with all applicable laws and regulations) or to propose alternative projects (including non-transmission alternatives) that will ensure that any reliability need is satisfied in an adequate manner. If a NERC Registered Entity believes that abandonment will cause a specific NERC Reliability Standard to be violated, and the Duke Transmission Provider(s) have not chosen to complete the project in order to prevent the violation, or cannot complete such a project in a timely fashion, the NERC Registered Entity will be expected to submit a mitigation plan to the appropriate entity to address the violation.

5. Transparency

A. The Duke Transmission Provider shall post procedures for coordination and joint

evaluation on the Regional Planning website.

B. Access to the data utilized will be made available through the Regional Planning website subject to the appropriate clearance, as applicable (such as CEII and confidential non-CEII). The Duke Transmission Provider will make available, on the Regional Planning website, links for stakeholders to register (if applicable/available) for the stakeholder committees or distribution lists of the SCRTP planning region.

C. At the fourth quarter SERTP Summit, or as necessary due to current activity of proposed interregional transmission projects, the Duke Transmission Provider will provide status updates of interregional activities including:

- Facilities to be evaluated
- Analysis performed
- Determinations/results.

D. Stakeholders will have an opportunity to provide input and feedback within the respective regional transmission planning processes of the SERTP and the SCRTP related to interregional facilities identified, analysis performed, and any determination/results. Stakeholders may participate in either or both regions' regional transmission planning processes to provide their input and feedback regarding the interregional coordination between the SERTP and the SCRTP.

E. The Duke Transmission Provider will post, on the Regional Planning Website, a list of all interregional transmission projects that are proposed for potential selection in a regional transmission plan for purposes of cost allocation in both the SERTP and the SCRTP that are found not to be eligible for consideration because

they do not satisfy the regional project threshold criteria of one or both of the regions. The Duke Transmission Provider will also post an explanation of the relevant thresholds the proposed interregional project(s) failed to satisfy.

ATTACHMENT N-1 - SCRTP

Interregional Transmission Coordination Between the SERTP and SCRTP Regions

The Duke Transmission Provider, through its regional transmission planning process coordinates with the public utility transmission providers in the South Carolina Regional Transmission Planning Process region ("SCRTP") to address transmission planning coordination issues related to interregional transmission facilities. The interregional transmission coordination procedures include a detailed description of the process for coordination between the public utility transmission providers in the SERTP and the SCRTP (i) with respect to an interregional transmission facility that is proposed to be located in both transmission planning regions and (ii) to identify possible interregional transmission facilities that could address transmission needs more efficiently or cost effectively than transmission facilities included in the respective regional or local transmission plans. The interregional transmission coordination procedures are hereby provided in this Attachment N-1 - SCRTP with additional materials provided on the Regional Planning website.

The Duke Transmission Provider ensures that the following requirements are included in the interregional transmission coordination procedures:

(1) A commitment to coordinate and share the results of the SERTP and the SCRTP regional transmission plans to identify possible interregional transmission projects that could address transmission needs more efficiently or cost-effectively than separate transmission facilities, as well as a procedure for doing so;

(2) A formal procedure to identify and jointly evaluate transmission facilities that are proposed to be located in both transmission planning regions;

(3) A duty to exchange, at least annually, planning data and information; and

(4) A commitment to maintain a website or e-mail list for the communication of information related to the coordinated planning process.

The Duke Transmission Provider has worked with the transmission providers located in the SCRTP to develop a mutually agreeable cost allocation method for new interregional transmission facilities that are located within both transmission planning regions. Such cost allocation methodology, which satisfies the six interregional cost allocation principles set forth in Order No. 1000, is included in this Attachment N-1 - SCRTP.

For purposes of this Attachment N-1 - SCRTP, the SERTP regional transmission planning process is the process described in Attachment N-1 of this Tariff; the SCRTP's regional transmission planning process is the process described in the relevant Attachment Ks (or analog tariff sections) of the public utility transmission providers in the SCRTP. References to the respective regional transmission planning processes in this Attachment N-1 - SCRTP are intended to identify the activities described in those tariff provisions. Unless noted otherwise, Section references in this Attachment N-1 - SCRTP refer to Sections within this Attachment N-1 - SCRTP.

INTERREGIONAL TRANSMISSION PLANNING PRINCIPLES

Representatives of the SERTP and the SCRTP will meet no less than once per year to facilitate the interregional coordination procedures described below (as applicable). Representatives of the SERTP and the SCRTP may meet more frequently during the evaluation of project(s) proposed for purposes of interregional cost allocation between the SERTP and the SCRTP.

1. Coordination

1.1 Review of Respective Regional and Local plans: Biennially, the Duke Transmission Provider and the public utility transmission providers in the SCRTP shall review each other's current regional and local plan(s) and engage in the data exchange and joint evaluation described in Sections 2 and 3.

1.2 Review of Proposed Interregional Projects: The Duke Transmission Provider and the public utility transmission providers in the SCRTP will coordinate with regard to the evaluation of interregional transmission projects identified by the Duke Transmission Provider and the public utility transmission providers in the SCRTP as well as interregional transmission projects proposed for Interregional Cost Allocation Purposes ("Interregional CAP"), pursuant to Sections 3 and 4, below. Initial coordination activities regarding new interregional proposals will typically begin during the third calendar quarter. The Duke Transmission Provider and the public utility transmission providers in the SCRTP will typically exchange status updates for new interregional transmission project proposals or proposals currently under consideration every six (6) months, or as needed. These status updates will include, if applicable: (i) an update of the region's evaluation of the proposal; (ii) the latest calculation of Regional Benefits (as defined in Section 4.2); (iii) the anticipated timeline for future assessments; and (iv) reevaluations related to the proposal.

1.3 Coordination of Assumptions Used in Joint Evaluation: The Duke Transmission Provider and the public utility transmission providers in the SCRTP will coordinate assumptions used in joint evaluations, as necessary, which include

items such as:

- Expected timelines/milestones associated with the joint evaluation
- Study assumptions
- Regional benefit calculations.

2. Data Exchange

2.1 At least annually, the Duke Transmission Provider and the public utility transmission providers in the SCRTP shall exchange power-flow models and associated data used in the regional transmission planning processes to develop their respective then-current regional and local transmission plan(s). This exchange will typically occur by the beginning of each region's transmission planning cycle. Additional transmission-based models and data may be exchanged between the Duke Transmission Provider and the public utility transmission providers in the SCRTP as necessary and if requested. For purposes of the interregional coordination activities outlined in this Attachment N-1 - SCRTP, data and models used in the development of the SERTP and the SCRTP then-current regional and local transmission plans and used in their respective regional transmission planning processes will be exchanged. This data will be posted on the pertinent regional transmission planning process' website, consistent with the posting requirements of the respective regional transmission planning processes, and may be treated as CEII as appropriate. The Duke Transmission Provider shall notify the public utility transmission providers in the SCRTP of such posting.

2.2 The SERTP regional and local transmission plans will be posted on the Regional

Planning website pursuant to the Duke Transmission Provider's regional transmission planning process. The Duke Transmission Provider will also notify the public utility transmission providers in the SCRTP of such posting. The SCRTP will exchange its then-current regional and local plan(s) in a similar manner according to its regional transmission planning process.

3. Joint Evaluation

3.1 Identification of Interregional Projects: The Duke Transmission Provider and the public utility transmission providers in the SCRTP shall exchange planning models and data and current regional and local transmission plans as described in Section 2. The Duke Transmission Provider and the public utility transmission providers in the SCRTP will review one another's then-current regional and local plan(s) in accordance with the coordination procedures described in Section 1 and their respective regional transmission planning processes. If, through this review, the Transmission Provider and the public utility transmission providers in the SCRTP identify a potential interregional project that could be more efficient or cost effective than projects included in the respective regional or local plans, the Duke Transmission Provider and the public utility transmission providers in the SCRTP will jointly evaluate the potential project pursuant to Section 3.4.

3.2 Identification of Interregional Projects by Stakeholders: Stakeholders may propose projects that may be more efficient or cost-effective than projects included in the SERTP and the SCRTP regional or local transmission plans. Stakeholders may propose these projects pursuant to the procedures in each region's regional transmission planning processes. The Duke Transmission

Provider and the public utility transmission providers in the SCRTP will evaluate interregional projects proposed by stakeholders pursuant to Section 3.4.

3.3 Identification of Interregional Projects by Developers: Interregional transmission projects proposed for potential Interregional CAP must be submitted in both the SERTP and SCRTP regional transmission planning processes. The project submittal must satisfy the requirements of Section 4.1. The submittal must identify the potential transmission project as interregional in scope and identify the SERTP and SCRTP as regions in which the project is proposed to interconnect. The Duke Transmission Provider will verify whether the submittal for the potential interregional transmission project satisfies all applicable requirements. Upon finding that the proposed interregional transmission project satisfies all such applicable requirements, the Duke Transmission Provider will notify the public utility transmission provider(s) in the SCRTP. Once the potential project has been proposed through the regional transmission planning processes in both regions, and upon both regions so notifying one another that the project is eligible for consideration pursuant to their respective regional transmission planning processes, the Duke Transmission Provider and the public utility transmission providers in the SCRTP will jointly evaluate the proposed interregional projects pursuant to Sections 3 and 4.

3.4 Evaluation of Interregional Projects: The Duke Transmission Provider and the public utility transmission providers in the SCRTP shall act through their respective regional transmission planning processes to evaluate potential interregional transmission projects and to determine whether the inclusion of any

potential interregional transmission projects in each region's regional transmission plan would be more efficient or cost-effective than projects included in their respective then-current regional or local transmission plans. Such analysis shall be consistent with accepted transmission planning practices of the respective regions and the methods utilized to produce each region's respective regional and local transmission plan(s). The Duke Transmission Provider will evaluate potential interregional transmission projects consistent with Sections 4, 5 and 20 of Attachment N-1. To the extent possible and as needed, assumptions and models will be coordinated between the Transmission Provider and the public utility transmission providers in the SCRTP as described in Section 1. Data shall be exchanged to facilitate this evaluation using the procedures described in Section 2.

3.5 Initial Evaluation of Interregional Projects Proposed for Interregional Cost Allocation Purposes: If an interregional project is proposed in the SERTP and the SCRTP for Interregional CAP, the initial evaluation of the project will typically begin during the third calendar quarter, with analysis conducted in the same manner as analysis of interregional projects identified pursuant to Sections 3.1 and 3.2. Projects proposed for Interregional CAP shall also be subject to the requirements of Section 4.

4. Cost Allocation: If an interregional project is proposed for Interregional CAP in the SERTP and the SCRTP, then the following methodology applies:

4.1 Interregional Projects Proposed for Interregional Cost Allocation Purposes: For a transmission project to be considered for Interregional CAP within the

SERTP and the SCRTP, the following criteria must be met:

A. The transmission project must be interregional in nature:

- Be located in both the SERTP and the SCRTP regions;
- Interconnect to transmission facilities in both the SERTP and SCRTP regions. The facilities to which the project is proposed to interconnect may be either existing transmission facilities or transmission projects included in the regional transmission plan that are currently under development;
- Meet the qualification criteria for transmission projects potentially eligible to be included in the regional transmission plans for purposes of cost allocation in both the SERTP and the SCRTP, pursuant to their respective regional transmission planning processes.

B. On a case-by-case basis, the Duke Transmission Provider and the public utility transmission providers in the SCRTP will consider a transmission project that does not satisfy all of the criteria specified in Section 4.1.A but: (i) meets the threshold criteria for a project proposed to be included in the regional transmission plan for purposes of cost allocation in only one of the two regions; (ii) would be located in both regions; and (iii) would be interconnected to transmission facilities in both the SERTP and SCRTP regions. The facilities to which the project is proposed to interconnect may be either existing transmission facilities or transmission projects included in the regional transmission plan that are currently under development.

C. The transmission project must be proposed for purposes of cost allocation in both the SERTP and the SCRTP.

- The transmission developer and project submittal must satisfy all criteria specified in the respective regional transmission processes.
- The proposal should be submitted in the timeframes outlined in the respective regional transmission planning processes.

4.2 Evaluation of Interregional Projects Proposed for Interregional Cost Allocation Purposes: Interregional projects proposed for Interregional CAP in the SERTP and the SCRTP shall be evaluated within the respective regions as follows:

A. Each region, acting through its regional transmission planning process, will evaluate proposals to determine whether the proposed project(s) addresses transmission needs that are currently being addressed with projects in its regional or local transmission plan and, if so, which projects in the regional or local transmission plan could be displaced by the proposed project(s).

B. Based upon its evaluation, each region will quantify a Regional Benefit based upon the transmission costs that each region is projected to avoid due to its transmission project(s) being displaced by the proposal.

- For purposes of this Attachment N-1 - SCRTP, "Regional Benefit" means the total avoided capital costs of projects included in the then-current regional or local transmission plans that would be displaced if the proposed interregional transmission project was included. The

Regional Benefit is not necessarily the same as the benefits used for purposes of *regional* cost allocation.

4.3. Calculation of Benefit to Cost Ratio: Each region will calculate a regional benefit to cost ("BTC") ratio consistent with its regional process and compare the BTC ratio to its respective threshold to determine if the interregional project appears to be more efficient or cost effective than those projects included in its current regional or local transmission plan. For purposes of this BTC ratio evaluation:

A. Each region shall utilize the benefit calculation(s) as defined in such region's regional transmission planning process (for purposes of clarity, these benefits are not necessarily the same as the Regional Benefits determined pursuant to Section 4.2).

B. Each region shall utilize the cost calculation(s) as defined in such region's regional transmission planning process. The anticipated percentage allocation of costs of the interregional project to each region shall be based upon the ratio of the region's Regional Benefit to the sum of the Regional Benefits identified for both the SERTP and the SCRTP. The Regional Benefits shall be determined pursuant to the methodology described in Section 4.2.

Regional BTC assessments shall be performed in accordance with each region's regional transmission planning process, including but not limited to subsequent calculations and reevaluations.

4.4 Inclusion in Regional Transmission Plans: An interregional project proposed for Interregional CAP in the SERTP and the SCRTP will be included in the respective regional transmission plans for purposes of cost allocation after:

A. Each region has performed all evaluations, as prescribed in its regional transmission planning process, necessary for a project to be included in its regional transmission plan for purposes of cost allocation.

- This includes any regional BTC ratio calculations performed pursuant to Section 4.3; and

B. Each region; has obtained all approvals, as prescribed in its regional process, necessary for a project to be included in the regional transmission plan for purposes of cost allocation have been obtained.

4.5 Allocation of Costs Between the SERTP and the SCRTP: The cost of an interregional project, selected for purposes of cost allocation in the regional transmission plans of both the SERTP and the SCRTP, will be allocated as follows:

A. Each region will be allocated a portion of the interregional project's costs in proportion to such region's Regional Benefit to the sum of the Regional Benefits identified for both the SERTP and the SCRTP.

- The Regional Benefits used for this determination shall be based upon the last Regional Benefit calculation performed – pursuant to the method described in Section 4.2. – before each region included the project in its regional transmission plan for purposes of cost allocation and as approved by each region.

B. Costs allocated to each region shall be further allocated within each region pursuant to the cost allocation methodology contained in its regional transmission planning process.

4.6 Removal from Regional Plans: An interregional project may be removed from the SERTP or the SCRTP regional plan for purposes of cost allocation: (i) if the developer fails to meet developmental milestones; (ii) pursuant to the reevaluation procedures specified in the respective regional transmission planning processes; or (iii) if the project is removed from one of the region's regional transmission plans pursuant to the requirements of its regional transmission planning process.

A. The Transmission Provider shall notify the public utility transmission providers in the SCRTP if an interregional project or a portion thereof is likely to be removed from its regional transmission plan.

4.7 Abandonment: If an interregional project is abandoned, the impacted Duke Transmission Provider(s) may seek to complete the interregional project (in accordance with all applicable laws and regulations) or to propose alternative projects (including non-transmission alternatives) that will ensure that any reliability need is satisfied in an adequate manner. If a NERC Registered Entity believes that abandonment will cause a specific NERC Reliability Standard to be violated, and the Duke Transmission Provider(s) have not chosen to complete the project in order to prevent the violation, or cannot complete such a project in a timely fashion, the NERC Registered Entity will be expected to submit a mitigation plan to the appropriate entity to address the violation.

5. Transparency

A. The Duke Transmission Provider shall post procedures for coordination and joint

evaluation on the Regional Planning website.

B. Access to the data utilized will be made available through the Regional Planning website subject to the appropriate clearance, as applicable (such as CEII and confidential non-CEII). The Duke Transmission Provider will make available, on the Regional Planning website, links for stakeholders to register (if applicable/available) for the stakeholder committees or distribution lists of the SCRTP planning region.

C. At the fourth quarter SERTP Summit, or as necessary due to current activity of proposed interregional transmission projects, the Duke Transmission Provider will provide status updates of interregional activities including:

- Facilities to be evaluated
- Analysis performed
- Determinations/results.

D. Stakeholders will have an opportunity to provide input and feedback within the respective regional transmission planning processes of the SERTP and the SCRTP related to interregional facilities identified, analysis performed, and any determination/results. Stakeholders may participate in either or both regions' regional transmission planning processes to provide their input and feedback regarding the interregional coordination between the SERTP and the SCRTP.

E. The Duke Transmission Provider will post, on the Regional Planning Website, a list of all interregional transmission projects that are proposed for potential selection in a regional transmission plan for purposes of cost allocation in both the SERTP and the SCRTP that are found not to be eligible for consideration because

they do not satisfy the regional project threshold criteria of one or both of the regions. The Duke Transmission Provider will also post an explanation of the relevant thresholds the proposed interregional project(s) failed to satisfy.

B. The transmission project must be proposed in the SERTP and SPP regional planning processes for purposes of cost allocation, as well as any other regions to which the proposed transmission project would interconnect, in accordance with the procedures of the applicable regional transmission planning processes. If the proposed transmission project is being proposed by a transmission developer, the transmission developer must also satisfy all qualification criteria specified in the respective regional transmission planning processes, as applicable.

2.2 Inclusion in Regional Transmission Plans for Purposes of Cost Allocation: An interregional transmission project proposed for interregional cost allocation purposes in each region will be included in the respective regional transmission plans for purposes of cost allocation after each region has performed all evaluations and the transmission project has obtained all approvals, as prescribed in the respective regional transmission planning processes, necessary for it to be included in each regional transmission plan for purposes of cost allocation.

2.3 Allocation of Costs Between the SERTP and SPP: The cost of an interregional transmission project selected for purposes of cost allocation in the regional transmission plans of both the SERTP and SPP will be allocated between the regions as follows:

A. Each region will be allocated a portion of the interregional transmission project's costs in proportion to such region's Regional Benefit to the sum of the Regional Benefits identified for both the SERTP and SPP.

- The Regional Benefits used for this determination shall be based upon the last Regional Benefit calculation performed – pursuant to the method described in Section 1.3.4.2 – before each region included the transmission project in its regional transmission plan for purposes of cost allocation and as approved by each region.
- Should one region be willing to bear more costs of the interregional transmission project than the costs identified pursuant to the methodology described in this Section 2.3.A, the regions may voluntarily agree, subject to applicable regional approvals, to an alternative cost sharing arrangement.

2.4 Milestones of Required Steps Necessary to Maintain Status as Being Selected for Interregional Cost Allocation Purposes: Once selected in the respective regional transmission plans for purposes of cost allocation, the SERTP Sponsor(s) that will be allocated costs of the transmission project and SPP (*collectively* "beneficiaries") and the transmission developer must mutually agree upon an acceptable development schedule including milestones by which the necessary steps to develop and construct the transmission project must occur. These milestones may include (to the extent not already accomplished) obtaining all necessary rights-of-way and requisite environmental, state, and other governmental approvals and executing a mutually-agreed upon contract(s) between the transmission developer and the beneficiaries. If the specified milestones are not met, then the Duke Transmission Provider may remove the

transmission project from the selected category in the regional transmission plan for purposes of cost allocation.

2.5 Interregional Project Contractual Arrangements: The contracts referenced in Section 2.4 will address terms and conditions associated with the development of the proposed transmission project included in the regional transmission plans for purposes of cost allocation, including but not limited to:

a) Engineering, procurement, construction, maintenance, and operation of the proposed transmission project, including coordination responsibilities of the parties;

b) Emergency restoration and repair;

c) The specific financial terms/specific total amounts to be charged by the transmission developer of the transmission project to each beneficiary, as agreed to by the parties;

d) Creditworthiness/project security requirements;

e) Milestone reporting, including schedule of projected expenditures;

f) Reevaluation of the transmission project; and

g) Non-performance or abandonment.

2.6 Removal from Regional Transmission Plans for Purposes of Cost Allocation: An interregional transmission project may be removed from the Duke Transmission Provider's or SPP's regional transmission plan for purposes of cost allocation (1) if the project is removed from either regions' regional transmission plans pursuant to the requirements of its regional transmission planning process or

(2) if the developer fails to meet the developmental milestones established pursuant to Section 2.4.

2.6.1: The Duke Transmission Provider and/or SPP will notify the other party if an interregional transmission project or a portion thereof is likely to be removed from its regional transmission plan.

3. Transparency

3.1 The Duke Transmission Provider and SPP shall host their respective regional websites for communication of information related to coordinated interregional transmission planning procedures. The regions shall coordinate on the documents and information that is posted on their respective websites to ensure consistency of information. Each regional website shall contain, at a minimum, the following information:

i. Link to this Attachment N-1 SPP;

ii. Information related to joint meetings, such as links to materials for joint meetings;

iii. Documents relating to joint evaluations; and

iv. Procedures for coordination and joint evaluation.

3.2 Access to the data utilized will be made available through the pertinent regional planning websites subject to the requirements in Section 1.2.3. The Duke Transmission Provider will make available, on the Regional Planning website, links to where stakeholders can register (if applicable/available) for SPP stakeholder committees and distribution lists.

3.3 At the fourth quarter SERTP Summit, or as necessary due to current activity of proposed interregional transmission projects, the SERTP Sponsors will provide status updates of interregional activities including:

- Facilities to be evaluated;
- Analysis performed; and
- Determinations/results.

3.4 Stakeholders will have an opportunity to provide input and feedback related to interregional facilities identified, analysis performed, and any determination/results within the respective regional transmission planning processes. Stakeholders may participate in either or both regions' regional transmission planning processes to provide their input and feedback regarding the interregional coordination activities described in this Attachment N-1 - SPP.

ATTACHMENT N-2

TRANSMISSION PLANNING PROCESS
(DEF Zone)

Transmission Provider plans for the existing and future requirements of all customers of Transmission Provider's transmission system in a coordinated, open, comparable, non-discriminatory and transparent manner both at the local and regional level. The Transmission Planning Process described herein includes Transmission Service for Transmission Provider's Native Load Customers, Network Customers, Firm Point-to-Point Transmission Customers, and Generator Interconnection Service for Interconnection Customers. The Transmission Planning Process is intended to provide transmission customers the opportunity to interact with the transmission planning personnel of the Transmission Provider in order for transmission customers to provide timely and meaningful input into the development of the transmission plan. Transmission Provider's Transmission Planning Process works in conjunction with and is an integral part of the *Florida Reliability Coordinating Council's ("FRCC") Regional Transmission Planning Process* (reference the FRCC website for this document[1]) which facilitates coordinated planning by all transmission providers, owners and stakeholders within Peninsular Florida, east of the Apalachicola River (the "FRCC Region").

The FRCC is a member services organization, which conducts activities on behalf of its members to maintain grid reliability in the FRCC Region, which is electrically unique because it is a peninsula and is tied to the Eastern Interconnection only on one side. FRCC's members include investor owned utilities, cooperative utilities, and municipal utilities. The FRCC Board of Directors has the responsibility to ensure that the *FRCC Regional Transmission Planning Process* is fully implemented. The FRCC Planning Committee ("FRCC PC"), which allows representation from all FRCC members, directs the FRCC Transmission Technical Subcommittee and any other supporting committee or subcommittee, in conjunction with the FRCC Staff, to conduct the necessary studies to fully implement the *FRCC Regional Transmission Planning Process*. The descriptions of the *FRCC Regional Transmission Planning Process* set forth herein summarize the elements of that process as they relate to Transmission Provider and the principles of the Final Rule in Docket No. RM05-25-000.

The Florida Public Service Commission ("FPSC") is an integral part of the planning process by providing input, guidance, and regulatory oversight under this process. Additionally, the FPSC conducts workshops on an annual basis to review the transmission and generation expansion plans for Florida. The FPSC, under Florida law, has the authority to ensure an adequate and reliable electric system for Florida. As set forth below, Transmission Provider's Transmission Planning Process is a seamless process that fully integrates both the local and regional transmission planning and is designed to satisfy the following principles, as defined in the FERC Final Rule in Docket No. RM05-25-000: (1) coordination, (2) openness, (3) transparency, (4) information exchange, (5) comparability, (6) dispute resolution, (7) regional coordination, (8) economic planning studies, and (9) cost allocation for new projects. Descriptions of the *FRCC Regional Transmission Planning Process* are contained herein as they relate to Transmission Provider's Transmission Planning Process.

End Notes:

1. The FRCC or the SERC Reliability Corporation ("SERC") post on their respective websites at https://www.frcc.com and www.serc1.org all of the FRCC and SERC documents referenced in this Attachment N-2. This provides flexibility for the FRCC and SERC to change the URL addresses for individual FRCC and SERC documents without requiring the modification of tariff language.

Section 1 Coordination

1.1 Transmission Provider consults and interacts directly with its customers in providing transmission service and generator interconnection service as well as with its neighboring transmission providers, on a regular basis. A transmission customer may request and/or schedule a meeting with Transmission Provider to discuss any issue related to the provision of transmission service at any time. Transmission Provider consults and interacts with its customers any time during the study process that either the transmission customer or the Transmission Provider deem necessary and/or at various stages of the planning process (e.g., Scoping Meeting, Feasibility, System Impact and Facilities Studies). An open dialogue between the transmission customer and the Transmission Provider takes place regarding customer needs. This interaction and dialogue between the customer and Transmission Provider are further described under the Local Transmission Network Planning Process as set forth in Appendix 1 to this Attachment N-2. Topics such as load growth projections, planned generation resource additions/deletions, new delivery points and possible transmission alternatives are discussed. This dialogue is intended to provide timely and meaningful input and participation of customers during the early stages of development of the transmission plan. Additionally, the transmission customer shall have an opportunity to comment at any time during the evaluation process and/or when study findings (Feasibility, System Impact and Facilities Studies) are communicated by the Transmission Provider to the customer. Transmission Provider communicates with its neighboring transmission providers on a regular basis, and Transmission Provider facilitates communication and consultation between its customers and its neighboring transmission service providers/owners, specifically, if during the transmission service study process, a neighboring system's facilities are identified as being affected. This coordination process continues in a seamless manner at the local as well as the regional level, leading to each Transmission Provider providing an initial transmission plan which, when consolidated, becomes the initial regional transmission plan. The initial transmission plan submitted to the FRCC by the Transmission Provider, which results from the Local Transmission Network Planning Process as set forth in Appendix 1 to this Attachment N-2, will be posted by the FRCC in accordance with the FRCC Regional Transmission Planning Process (reference link to Initial Plans on the FRCC website). This initial transmission plan is reviewed by the FRCC as well as all interested transmission customers/users. The Transmission Provider relies on the FRCC Committee process to finalize its initial transmission plan as submitted to the FRCC. In addition to transmission customers/users being provided timely and meaningful input and participation during the planning process with the Transmission Provider, the transmission customers/users are also given an additional opportunity to raise any issues, concerns or minority opinions that they believe have not been adequately addressed by any Transmission Providers' initial transmission plan submittal during the FRCC review process. This FRCC review process normally

commences shortly after the submittal of the Ten Year Site Plans to the FPSC on April 1 of each year. Once issues raised by interested stakeholders are addressed, including consideration of proposed "Cost Effective or Efficient Regional Transmission Solutions" ("CEERTS") projects as set forth in section 1.2 below, the FRCC PC approves the proposed regional transmission plan and presents it to the FRCC Board for approval. Upon approval by the Board, which is expected in February of each year, the FRCC sends the final regional transmission plan to the FPSC. Unresolved issues may be resolved under the Dispute Resolution Procedures in Appendix 5.

1.2 CEERTS Projects

1.2.1 This section 1.2 sets forth provisions for consideration of proposed CEERTS projects in the regional transmission planning process in which Transmission Provider participates and applies to reliability, economic and public policy regional transmission projects. As discussed above, the FRCC Board of Directors has the responsibility to ensure that the FRCC Regional Transmission Planning Process is fully implemented. The process results in a Board-approved regional plan. The biennial transmission planning process, in which CEERTS projects are identified, evaluated, and considered for regional cost allocation, contains several steps in which the FRCC Board is kept informed and must act in order to keep the process moving forward. The FRCC Board typically meets at least four times per year. If a regular meeting of the Board is not scheduled within the timeframes specified for the evaluation of a CEERTS project, special meetings of the Board will be called by the Chair, as needed, in order to meet the scheduled milestones for CEERTS project evaluation within the biennial transmission planning process timeline.

As set forth herein, the Transmission Provider, in collaboration with other transmission providers, FRCC staff, and other FRCC members, shall identify and evaluate whether there are more efficient or cost-effective regional transmission solutions to regional transmission needs relative to the transmission facilities in the initial regional transmission plan. The regional analysis shall utilize the standards, criteria, rules, tools, data, models, methods and studies of the local transmission plans, as delineated in Appendix 1, supplemented as necessary for the regional analysis as set forth herein. The regional analysis shall determine if there is a solution meeting CEERTS project criteria under section 1.2.3.

The regional analysis shall include consideration of potential transmission solutions to transmission needs driven by public policy requirements, as such needs are identified pursuant to section 11. The provisions for stakeholder involvement and input in the regional transmission plan, and ability to propose CEERTS projects on their own initiative, as set forth in this section 1.2, are fully applicable to potential transmission solutions to transmission public policy needs driven by public policy requirements.

1.2.2 Any entity desiring to propose a CEERTS project for regional cost allocation must submit such a CEERTS project to the FRCC no later than June 1st of the

first year of the biennial regional projects planning cycle. The entity proposing a CEERTS project is referred to herein as the project sponsor. The project sponsor for a CEERTS project need not be the project developer for that project.

In addition to the right of individual entities to submit potential CEERTS projects, Transmission Provider shall participate with other transmission providers and other interested entities, through the FRCC PC, in the identification and evaluation of potential CEERTS projects for submission. The FRCC PC, or a designated subcommittee thereof, shall proactively seek out potential CEERTS projects from its analysis of the most recent Board-approved plan. This will occur during the period February through April of the first year of the biennial regional projects planning cycle. The general steps of the process are as follows:

A. Gather all relevant information relating to the most recent Board-approved plan (e.g., Final Project Information Form, approved Long Range Study, early project suggestions from interested entities); and request and collect all necessary supplemental information from transmission providers and other entities (e.g., project details and cost estimates for projects identified for potential displacement, list of potentially feasible projects not selected in the initial regional transmission plan).

B. Analyze the current plan information to identify potential opportunities for CEERTS projects. Seek justification for remedies that do not have projects planned, and synergies with the planned projects that potentially could be modified, combined, or accelerated for a more cost effective or efficient regional transmission solution. The analysis will include comparative load flow studies to evaluate various potential transmission CEERTS projects. For example, comparative load flow studies will be run to identify and evaluate potential CEERTS projects that could displace transmission projects in the initial regional transmission plan.

    1. If a potential CEERTS project is identified that addresses a regional reliability or economic transmission need(s) for which no transmission projects are currently planned, an analysis will be performed to identify local and/or regional alternative transmission project(s) which would also fully and appropriately address the same transmission need(s). These local and/or regional alternative transmission project(s) will be identified through comparative load flow studies. The alternative project(s) will be used to determine the Total Estimated Alternative Project Cost Benefit in the CEERTS Project Cost-Benefit Analysis described in section 1.2.9.C.

    2. If a potential regional public policy transmission need has been identified for which no transmission projects are currently planned and for which no CEERTS project has otherwise been submitted for evaluation, an analysis will be performed to identify a potential

CEERTS project that would satisfy that regional public policy transmission need in a least-cost manner by evaluating various potential transmission project alternatives.

C. Develop potential CEERTS project alternatives and solicit project sponsorship from enrolled transmission providers and other entities which may have an interest in sponsoring potential CEERTS projects.

1. A potential CEERTS project developed by this process will contain the following minimum set of transmission project information:

a) General description of the transmission facilities being proposed;

b) General path of the transmission lines; and

c) Transmission systems that would interconnect with the potential CEERTS project.

2. The FRCC shall post a notice on its website of any potential CEERTS projects identified through this process. Notice would be posted by May 1 of the first year of the biennial regional projects planning cycle to provide time for meeting sponsorship requirements by June 1.

3. Each identified potential CEERTS project will require at least one sponsor in order to be submitted to the FRCC for consideration. Multiple sponsors of the same project will be considered joint sponsors and shall equally share the required $100,000 deposit unless the sponsors otherwise mutually agree to a different sharing of the deposit. Potential CEERTS projects identified in this process shall not have competing sponsors for the same project. An entity that is not a sponsor or joint sponsor of a potential CEERTS project shall not be eligible to be a developer of that project unless the sponsors discontinue development of that project.

4. The sponsor or joint sponsors shall submit the potential CEERTS project for consideration in the first year of the biennial regional projects planning cycle.

1.2.3 To be eligible for approval by the FRCC Board for inclusion in the regional plan, a proposed CEERTS project must meet these threshold criteria:

A. Be a transmission line 230 kV or higher and 15 miles or longer; or be a substation flexible AC transmission system ("FACTS") device, e.g., series compensation or static var compensator, designed to operate at 230 kV or

more; and

B. Be materially different from projects already in the regional plan. For purposes of this section, the FRCC will consider a CEERTS project to be materially different from another CEERTS project if it displaces a different local project or projects or is not considered a minor adjustment to an existing local or CEERTS project that it is displacing. Minor adjustments could include changes in equipment size, different terminal bus arrangement, or a slight change in route.

Local transmission facilities located solely within a Transmission Provider's footprint (e.g. Control Area) that are not selected in the regional transmission plan for purposes of cost allocation cannot qualify as CEERTS projects. Such facilities are the responsibility of the Transmission Provider to meet reliability needs and/or other obligations within its retail distribution service territory or footprint.

1.2.4 A CEERTS project submittal must include the following elements (to be provided in the context of the most current FRCC Board-approved regional transmission plan):

A. Those project sponsors that do not also intend to be a project developer must submit sufficient information related to the proposed CEERTS project that will permit the potential CEERTS project to be adequately considered within the FRCC regional transmission planning process. Below is the minimum set of information that must be submitted:

1. General description of the transmission facilities being proposed;

2. General path of the transmission lines; and

3. Transmission systems that would interconnect with the proposed CEERTS project.

B. Those project sponsors that intend to be the project developer shall so indicate and shall submit the following information:

1. Transmission project technical information:

a) Description of the transmission facilities being proposed (*e.g.*, voltage levels);

b) General path of the transmission lines; and

c) Interconnection points with the existing transmission system.

2. A cost estimate and a recommended in-service date for the project. A project developer may also submit a demonstration of its cost containment capabilities, including any binding agreement to accept a cost cap for the developer's cost of the transmission project if it is selected as a CEERTS project.

3. If the project sponsor is an incumbent, it must indicate which funding option set forth in section 9.4.5.A it intends to select.

4. A high-level summary of who will own, operate and maintain the CEERTS project, to the extent available.

C. A project sponsor may also submit any studies and analysis it performed to support its proposed CEERTS project, including the below:

1. Reliability impact assessment.

2. Load flow analysis that demonstrates performance utilizing the FRCC load flow model. The sponsor, if not an FRCC member, may obtain this model upon request from the FRCC ("Request for Florida Reliability Coordinating Council (FRCC) Transmission Information" document is posted on the FRCC website).

3. Identification of projects in the regional transmission plan that would be affected or avoided as well as any additional projects that may be required. A demonstration through a technical evaluation process that the CEERTS project is equal to or superior to avoided projects from the current regional transmission plan.

D. A deposit of $100,000 shall be submitted by the project sponsor at the time the project is submitted (*e.g.*, June 1st of the biennial regional projects planning cycle) for each CEERTS project. This deposit will be used for FRCC internal labor costs for analysis of the project as well as any out-of-pocket expenses such as for independent consultants (unexpended amounts shall be refunded, with interest, to the project sponsor). The actual costs incurred by the FRCC to analyze the CEERTS project will be borne by the project sponsor and the deposit will be trued up based on the documented cost of the analysis. An accounting of the actual costs of the CEERTS project analysis including an explanation of how the costs were calculated will be provided to the project sponsor after the analysis has been completed. Any disputes regarding the accounting for specific deposits will be addressed through the Dispute Resolution Procedures in Appendix 5.

1.2.5 During the 30-45 days following the submittals under section 1.2.2, the FRCC PC shall review the project sponsor submittals and ensure that they meet the threshold criteria in section 1.2.3 and the minimum requirements in section 1.2.4. If a submittal is incomplete, the FRCC PC shall inform the CEERTS sponsor in

writing within 15 days after the next regularly scheduled FRCC PC meeting of the specific deficiency(ies), and the CEERTS sponsor shall be given an opportunity, within 30 days, to submit the information required for a complete submittal. This may be referred to as Step 1.

1.2.6 At the next FRCC Board meeting following the review in section 1.2.5, the FRCC PC shall provide an update to the FRCC Board related to all projects that have been submitted and deemed complete. The FRCC PC shall post this information on the FRCC website (subject to any posting restrictions to protect CEII or other confidential information). This may be referred to as Step 2. At that time, the FRCC PC shall also post on the FRCC website (subject to any posting restrictions to protect CEII or other confidential information) any determination that a proposed CEERTS project is not materially different from a project or projects already in the regional plan. Such posting will include an explanation of the basis for the determination that the proposed CEERTS project is not materially different.

1.2.7 During the succeeding three to five months following the FRCC Board meeting in section 1.2.6, for those CEERTS projects that cleared sections 1.2.3 through 1.2.5 above, the FRCC PC, together with an independent consultant, will conduct a technical analysis for the purpose of either developing CEERTS project information or validating CEERTS project information and analysis provided by the sponsor. Such analysis will be performed in a manner consistent with other technical analyses performed by the FRCC PC. This may be referred to as Step 3.

A. The development/validation process will either develop the needed CEERTS project parameters or validate the information and analysis provided by the sponsor. This analysis will examine the following:

1. Transmission project technical information:

a) Description of the transmission facilities being proposed (*e.g.*, voltage levels);

b) General path of the transmission lines; and

c) Interconnection points with the existing transmission system.

2. Load flow analysis that demonstrates adequate North American Electric Reliability Corporation ("NERC") Reliability Standards performance utilizing the FRCC load flow model;

3. Whether it can be demonstrated through a technical evaluation process that the CEERTS project is equal to or superior to avoided projects from the current regional transmission plan or equal to or superior to the alternative transmission project(s) that address(es) the same transmission need(s), which alternative must be identified

if there are no transmission projects currently planned for the relevant transmission need(s) (see section 1.2.2.B);

a) The FRCC PC shall verify that the proposed CEERTS project addresses transmission need(s) for which there are no transmission projects currently planned, and that the alternative project(s) to the CEERTS project could also meet such need(s). After the alternative project(s) are verified to meet such needs, the FRCC PC shall request that the entities responsible for the alternative project(s) provide cost information to the FRCC PC to be used in the FRCC PC's analysis;

4. Identification of projects in the regional transmission plan that would be affected or avoided as well as any additional projects that may be required.

a) The FRCC PC shall request that the entities responsible for the existing project(s) that could be impacted by the proposed CEERTS project, or entities who would be required to implement additional local projects provide cost information to the FRCC PC to be used in their analysis;

5. Cost estimate for the proposed CEERTS project; and

6. In-service date for the project.

B. The FRCC PC will also consider any proposed non-transmission alternatives on a comparable basis with the CEERTS project, as described in section 5.

C. The FRCC PC will provide the CEERTS sponsor and stakeholders an opportunity to review and provide input on a report that includes its findings from the technical analysis performed, and then the report will be provided to the FRCC Board with a recommendation as to whether the proposed CEERTS project should proceed to the next evaluation step in section 1.2.8 below. The CEERTS sponsor and stakeholders shall be given 15 days to provide written comments on the report to the FRCC Board following the date on which the FRCC PC provides the report and its recommendations to the Board.

1.2.8 Over a period of two to three months from receipt of the FRCC PC report and any comments on the report provided by the CEERTS sponsor and stakeholders pursuant to section 1.2.7.C, the FRCC Board will review the FRCC PC report and any comments received and determine if the CEERTS project should proceed to the next evaluation step as described in section 1.2.9 below. The CEERTS sponsor shall be invited to be present and participate in any FRCC Board meeting that addresses the FRCC PC report in order to answer questions and to present its

views regarding the CEERTS project and the FRCC PC report. If a CEERTS sponsor does not agree with the FRCC Board's determination, then the Dispute Resolution Procedures in Appendix 5 are available for use by the CEERTS sponsor. This may be referred to as Step 4.

1.2.9 Over a period of two to four months from FRCC Board approval of the continuation of the CEERTS project evaluation in section 1.2.8, the process described below will be performed by the FRCC PC under the direction of the FRCC Board. This may be referred to as Step 5.

A. A meeting will be organized by the FRCC PC to provide the CEERTS sponsor an opportunity to fully describe its proposed CEERTS project. This meeting is the venue to fully discuss the CEERTS project, taking into account the technical analysis performed by the FRCC PC, as well as any potential revisions, including transmission technical aspects, transmission project costs, and affected projects. This meeting also provides the opportunity for potentially affected transmission providers to discuss these matters. If no developer is a sponsor of the proposed project, then this meeting also provides an opportunity for potential developers to express interest in being considered as the developer of the CEERTS project (if no entity expresses interest as the project developer then the project will not move forward and the projects in the regional plan that would have been avoided by the CEERTS project will remain in the regional plan). If multiple qualified project developers express an interest in developing a CEERTS project for which the sponsor does not plan to be the developer, then such developers must each submit, within the 30 days following the meeting held pursuant to this section 1.2.9.A, the project information identified in section 1.2.4.B.2 through 1.2.4.B.4 and these project developer proposals will be evaluated in the remainder of the steps identified in sections 1.2.9 and 1.2.10. This forum will enable the CEERTS project to be fully reviewed by all affected parties.

B. The FRCC PC will consider the proposed project in light of the criteria set forth in sections 1.2.7.A. and 1.2.7.B above and as set forth below.

1. A cost-benefit analysis must be performed in accordance with section 1.2.9.C for reliability/economic projects by an independent consultant. If the result of this analysis is a benefit-to-cost ratio of greater than 1.00, the CEERTS project will move forward in the process.

2. For a project proposed to meet a public policy transmission need that requires a solution, as verified by the FRCC PC under section 11, the FRCC PC will determine whether the proposed CEERTS project meets the public policy transmission needs identified. There is no cost-benefit analysis performed, except for the validation of the CEERTS project being the least-cost solution.

The CEERTS project may be the only solution proposed, in which case it would be accepted in accordance with the project sponsorship model being used within the FRCC. However, in the event there are equally effective alternative CEERTS project solutions that have been proposed to satisfy the public policy transmission needs, then the least-cost CEERTS project would be selected.

The total estimated cost of the CEERTS public policy project is determined by the methodology set forth in section 1.2.9.C.4.

C. CEERTS Project Cost-Benefit Analysis

An independent consultant will be retained to perform a cost-benefit analysis and will issue a written report of findings to the FRCC PC for sponsor and stakeholder review as set forth in section 1.2.9.D. The independent consultant will determine if the benefit-to-cost ratio, which is the sum of the "Total Estimated Avoided Project Cost Benefit," "Total Estimated Alternative Projects Cost Benefit" and "Total Estimated Transmission Line Loss Value Benefit" divided by the "Estimated CEERTS Project Cost," is greater than 1.0.

Such analysis will consider estimated costs and benefits for the 10-year period of the planning horizon that is used to prepare the regional transmission plan under development at the time the analysis is prepared plus an additional, sequential 10-year period (the "20-year period"). Levelized annual costs and benefits to determine the appropriate revenue requirements will be used and deemed appropriate.

1. Total Estimated Avoided Project Cost Benefit

The Estimated Avoided Project Cost Benefit for each enrolled transmission provider in the FRCC that has one or more projects being displaced by a CEERTS project will be determined by the independent consultant in the below manner. A CEERTS project that was previously selected and included in the most recent Board-approved transmission plan may be displaced by a newly-proposed CEERTS project. If a newly-proposed CEERTS project would displace a previously-approved CEERTS project, the portion of the costs of the newly-proposed CEERTS project associated with the benefits calculated using the costs of the displaced previously-approved CEERTS project would be allocated to the enrolled transmission providers that were allocated the costs for the previously-approved CEERTS project (see Appendix 4, Example 4 for a hypothetical example of this cost allocation process).

Each enrolled transmission provider that has one or more projects being displaced is considered a beneficiary of the proposed

transmission facility(ies) and will develop an original installed capital cost estimate for each project being displaced and indicate in what year each such project would be projected to be in service.

The independent consultant will review each enrolled transmission provider's cost estimate and may determine to use it for further calculations, or may determine that the estimate is unreasonable and issue a revised cost estimate. If the original cost estimate is not used, justification for its rejection will be described in the independent consultant's report.

The independent consultant will calculate a comprehensive annual transmission revenue requirement associated with the original or revised cost estimate, depending on which will be used for further calculations, for each year that the displaced project would have been expected to be in service during the 20-year period, but for the CEERTS project. In calculating such an estimated revenue requirement, the independent consultant will take into account relevant factors and assumptions such as: the enrolled transmission provider's current FERC-approved rate of return on equity (if any); commitments regarding incentive rates; weighted average cost of capital; and on-going capital and operating expenses. The independent consultant will describe any relevant factors and assumptions used in the report.

The net present value of the estimated annual revenue requirements for each project will be determined using the average discount rate of enrolled transmission providers weighted by their total capitalization (Enrolled TP Discount Rate). Each enrolled transmission provider will provide its discount rate and total capitalization to the independent consultant for purposes of this calculation. Such net present value will be the "TP Estimated Avoided Project Cost Benefit" for each enrolled transmission provider's displaced project(s).

All such TP Estimated Avoided Project Cost Benefits will be summed to determine the Total Estimated Avoided Project Cost Benefit.

2. Total Estimated Alternative Projects Cost Benefit

The Estimated Alternative Project Cost Benefit for each enrolled transmission provider in the FRCC that has one or more alternative projects for which a CEERTS project addresses a need for which there are no transmission projects currently planned will be determined by the independent consultant in the below manner. These projects will include those alternative transmission projects to a CEERTS project that were identified under section 1.2.2.B.1:

Each enrolled transmission provider that has one or more alternative projects is considered a beneficiary of the proposed transmission facility(ies) and will develop an original installed capital cost estimate for each alternative project and indicate in what year each such project would be needed to be in service.

The independent consultant will review each enrolled transmission provider's cost estimate and may determine to use it for further calculations, or may determine that the estimate is unreasonable and issue a revised cost estimate. If the original cost estimate is not used, justification for its rejection will be described in the independent consultant's report.

The independent consultant will calculate a comprehensive annual transmission revenue requirement associated with the original or revised cost estimate, depending on which will be used for further calculations, for each year that the alternative project would have been expected to be in service during the 20-year period, but for the CEERTS project. In calculating such an estimated revenue requirement, the independent consultant will take into account relevant factors and assumptions such as: the enrolled transmission provider's current FERC-approved rate of return on equity (if any); commitments regarding incentive rates; weighted average cost of capital; and on-going capital and operating expenses. The independent consultant will describe any relevant factors and assumptions used in the report.

The net present value of the estimated annual revenue requirements for each project will be determined using the average discount rate of enrolled transmission providers weighted by their total capitalization (Enrolled TP Discount Rate). Each enrolled transmission provider will provide its discount rate and total capitalization to the independent consultant for purposes of this calculation. Such net present value will be the "TP Estimated Alternative Project Cost Benefit" for each enrolled transmission provider's displaced project(s).

All such TP Estimated Alternative Project Cost Benefits will be summed to determine the Total Estimated Alternative Project Cost Benefit.

3. Total Estimated Transmission Line Loss Value Benefit

The Total Estimated Transmission Line Loss Value Benefit is calculated for each enrolled transmission provider by the independent consultant as follows:

The change in transmission losses caused by the CEERTS project

will be determined by the FRCC PC.

The FRCC PC will run simulations of the approved transmission plan with all projects, adjusted (if necessary) to include the alternative transmission projects that were identified that would have been needed to satisfy a transmission need for which no transmission projects are in the current transmission plan (see section 1.2.2.B), to establish base transmission losses for each enrolled transmission provider represented in the plan over the planning horizon. Base case losses will be determined for the years during which the CEERTS project is expected to be in service during the planning horizon, under both peak and off-peak conditions.

The approved transmission plan will then be modified to (1) include a proposed CEERTS project; (2) remove all alternative transmission projects; and (3) adjust or remove any affected or avoided transmission projects in the approved transmission plan as well as add any additional projects that would be required (see section 1.2.7.A.4) (after verifying that all reliability requirements are met) with the appropriate in-service dates. The modified plan is then analyzed for losses. The CEERTS case losses are determined for each enrolled transmission provider represented in the plan for the years during which the CEERTS project is expected to be in service during the planning horizon, at both peak and off-peak conditions. Enrolled transmission providers with reduced losses are beneficiaries of the CEERTS project.

The change in losses for year 10 of the planning horizon will be held constant for years 11-20 of the 20-year period. The change in losses (whether negative or positive) in each year that the CEERTS project is in service for the 20-year period is determined for each enrolled transmission provider.

> The value of the change in losses for each enrolled transmission provider will be determined by the independent consultant as follows:
>
> The independent consultant will use fuel cost and heat rate data from the U.S. Energy Information Administration ("EIA") to value losses.
>
> The net present value of the value of losses will be determined for each enrolled transmission provider using the Enrolled TP Discount Rate.
>
> Such net present value will be the "TP Estimated

Transmission Line Loss Value Benefit."

The TP Estimated Transmission Line Loss Value Benefit for each enrolled transmission provider will be summed to determine the Total Estimated Transmission Line Loss Value Benefit.

4. Estimated CEERTS Project Cost

The Estimated CEERTS Project Cost is determined using the following formula:

> Estimated CEERTS Project Cost = Estimated Developer Cost + Total Estimated Related Local Project Costs + Total Estimated Displacement Costs

The Estimated Developer Cost will be determined by the independent consultant as follows:

> The developer of a CEERTS project will provide an original installed capital cost estimate for the developer's project and indicate which year the project is expected to be in service.
>
> The independent consultant will review the developer's original cost estimate and may determine to use it for further calculations, or may determine that the estimate is unreasonable and issue a revised cost estimate. If the original cost estimate is not used, justification for its rejection will be described in the independent consultant's report.
>
> The independent consultant will calculate a comprehensive annual transmission revenue requirement associated with the original or revised cost estimate for the developer's project, depending on which will be used for further calculations, for the years during which the CEERTS project is expected to be in service during the 20-year period. In calculating such an estimated revenue requirement, the independent consultant will take into account relevant factors and assumptions such as: the rates of return on equity approved by FERC for the developer or its affiliates (if any); commitments regarding incentive rates; proposed weighted average cost of capital; and on-going capital and operating expenses. The independent consultant will describe any relevant factors and assumptions used in the report.
>
> The net present value of the estimated annual revenue requirements will be determined using the Enrolled TP Discount Rate. The net present value of these estimated annual revenue requirements shall be the Estimated Developer Cost.

The Total Estimated Related Local Project Cost will be determined as follows by the independent consultant:

Each enrolled transmission provider that will need to construct a local project to implement the CEERTS project will develop an original installed capital cost estimate for each such related local project and indicate what year such project is projected to be in service.

The independent consultant will review the enrolled transmission provider's cost estimate and may determine to use it for further calculations, or may determine that the estimate is unreasonable and issue a revised cost estimate. If the original cost estimate is not used, justification for its rejection will be described in the independent consultant's report.

The independent consultant will calculate a comprehensive annual transmission revenue requirement associated with the original or revised cost estimate for each year that the local project is expected to be in service during the 20-year period. In calculating such an estimated revenue requirement, the independent consultant will take into account relevant factors and assumptions such as: the enrolled transmission provider's current FERC-approved rate of return on equity (if any); commitments regarding incentive rates; weighted average cost of capital; and on-going capital and operating expenses. The independent consultant will describe any relevant factors and assumptions used in the report.

The net present value of the estimated annual revenue requirement for each local project will be determined using the Enrolled TP Discount Rate. Such net present value will be the TP Estimated Avoided Project Cost for the displaced project.

All TP Estimated Related Local Project Costs will be summed to determine the Total Estimated Related Local Project Cost.

The calculation of Total Estimated Displacement Cost will be performed by the independent consultant as follows:

Any enrolled transmission provider that has incurred, or expects to incur, costs associated with a project that is being displaced by a CEERTS project will provide an accounting to the independent consultant as to the level of its actual and expected expenditure on any displaced projects and any planned mitigation of such expenditures. The independent consultant will review the displacement cost estimate. The independent consultant will estimate the level of displacement cost that the enrolled

transmission provider that has expended funds on a displaced project will recover by assuming that the enrolled transmission provider will be permitted to recover 100% of such displacement costs. The independent consultant will calculate an annual transmission revenue requirement associated with the displacement cost estimate for each year so that the displacement costs would be recovered during the 20-year period. In calculating such an estimated revenue requirement, the independent consultant will take into account relevant factors and assumptions and will describe such relevant factors and assumptions used in the report. The net present value of the estimated annual revenue requirements shall be calculated using the Enrolled TP Discount Rate. Such net present value will be the Estimated Displacement Cost.

All such Estimated Displacement Costs will be summed to determine the Total Estimated Displacement Cost.

D. The FRCC PC will provide the CEERTS sponsor and stakeholders an opportunity to review and provide input on a report that includes its findings from the cost-benefit analysis performed that determined how benefits and beneficiaries were identified and applied to a proposed CEERTS project. The report will then be provided to the FRCC Board with the FRCC PC's recommendation based upon its review as set forth above. For any CEERTS public policy project(s), this report will include an explanation of why the CEERTS project(s) does or does not provide an opportunity to satisfy the public policy need. The CEERTS public policy analysis is more completely described in section 11.1. The CEERTS sponsor and stakeholders shall be given an opportunity to also provide written comments on the report to the FRCC Board. The CEERTS sponsor shall be invited to be present and participate in any FRCC Board meeting that addresses the FRCC PC report to answer questions and to present its views regarding the CEERTS project and the FRCC PC report.

E. The FRCC Board will review the FRCC PC report and any comments on the report that may be provided by the CEERTS sponsor and stakeholders and determine if the proposed CEERTS project is a more cost effective or efficient solution to regional transmission needs under applicable criteria in this section 1.2.9 and section 11.1.

F. If a CEERTS project is selected, the FRCC will perform analyses to determine whether the CEERTS project could potentially result in reliability impacts to the transmission system(s) in another transmission planning region. If a potential reliability impact is identified, the FRCC will coordinate with the public utility transmission providers in the other transmission planning region on any further evaluation. The evaluation may identify required upgrades in the other transmission planning region.

The costs of those upgrades are addressed in section 9.4.6.

1.2.10 Over a period of two to three months following a decision that a CEERTS project should move forward under section 1.2.9, the following "Transmission Project Developer and Project Selection Process" will occur. This may be referred to as Step 6.

A. If the CEERTS project requires upgrades to an enrolled transmission provider's existing facilities that enrolled transmission provider retains a right-of-first refusal to build those portions of the CEERTS project. As used in this section the term "upgrade" means an improvement to, addition to, or replacement of a part of an existing transmission facility; the term does not refer to an entirely new transmission facility. Nothing herein affects an enrolled transmission provider's rights under state law with regard to its real property (including rights of way and easements).

B. If a single project sponsor is also the developer identified for a given CEERTS project, then that project sponsor/developer is accepted by default as the project developer eligible to use the regional cost allocation for that CEERTS project (subject to the qualifications review below). If there are different proposed CEERTS projects to address the same transmission need(s), then the CEERTS project will be selected based on the highest benefit-to-cost ratio as determined in section 1.2.9.C and once a project sponsor/developer's proposed CEERTS project is selected in the regional transmission plan, that project sponsor/developer will also be selected as the project developer eligible to use the regional cost allocation for that CEERTS project, subject to the project developer qualifications review. CEERTS projects proposed by a single qualified project developer and selected by the FRCC Board will not be assigned to a different project developer.

C. If there are multiple project developers for the same CEERTS project, then the FRCC Board will, upon request, facilitate an opportunity for the project sponsors/developers to collaborate with each other to determine how each of the project developers may share responsibility for portions of the CEERTS project(s). If agreement is reached, then these project sponsors/developers will be selected (subject to the qualifications review below). If there is no agreement, then the project developer for the CEERTS project will be selected based on the highest benefit-to-cost ratio as determined in section 1.2.9.C.

1.2.11 Project Developer Qualifications Review

A. Project developers (both incumbent and non-incumbent project developers) that are submitting for the first time a qualification application must submit the application and a deposit of $50,000 to the FRCC along with the information identified in the Qualification Criteria as set forth in Appendix 3 of this Attachment N-2. The deposit will be used by the

FRCC Board to fund the internal FRCC labor cost for application review, which will be documented, and expenses for the independent consultant for the review described in the next section. Any unexpended amounts from the deposit, including interest, shall be refunded to the project developer. The transmission developer will be provided with an accounting of the actual costs and how the costs were calculated. Any disputes related to the accounting for specific deposits shall be addressed under the Dispute Resolution Procedures in Appendix 5. A project developer may be a joint venture or a partnership in which case a lead representative will be designated in the qualification application. Project developers that already have been found qualified after a review by the FRCC must submit an attestation to maintain their qualification as discussed in Appendix 3. If sufficient changes, as determined by the FRCC, have been identified in the attestation by a project developer which had previously been qualified, then a deposit of $10,000 to the FRCC will be required during the attestation review process. This deposit will be handled in a similar manner as described above for the initial project developer qualification review.

B. The FRCC Board will provide for the review of the submitted qualifications by an independent consultant. The consultant fees will be paid from the deposit made when a project developer qualification application is submitted. The consultant will make a recommendation to the FRCC Board as to whether the Qualification Criteria have been met. The FRCC Board shall make, on a non-discriminatory basis, a determination as to whether the Qualification Criteria have been met. If the FRCC Board determines that the Qualification Criteria have not been met, the FRCC Board will notify the project developer of the qualification deficiencies and provide a 30-day period for the project developer to cure the deficiencies. If a project developer does not agree with the FRCC Board's determination, then the Dispute Resolution Procedures in Appendix 5 are available for use by the project developer. The qualification process is a one-time process for each project developer, subject to the attestation review process provided for in Appendix 3.

C. The timeline for the project developer qualification review evaluation process is set forth below:

1. By January 1 of the first year of a biennial regional projects planning cycle, any potential developer that seeks to be qualified to develop CEERTS projects during this cycle must submit its qualifications to the FRCC. Biennial attestations also must be submitted at this time.

2. In January through March of the first year of a biennial regional projects planning cycle, FRCC shall coordinate the qualifications review.

3. By April 1 of the first year of a biennial regional projects planning cycle, the FRCC Board will inform developers that have submitted qualifications or attestations that they have either met the qualification criteria or the FRCC Board will identify deficiencies in the submitted qualifications/attestations.

4. From April 1 through April 30 of the first year of a biennial regional projects planning cycle, developers will have an opportunity to cure deficiencies and resubmit their modified qualifications/attestations.

5. From May 1 through May 31 of the first year of a biennial regional projects planning cycle, the FRCC Board shall reexamine the modified qualifications/attestations, make final determinations, and notify developers, FRCC members and other stakeholders.

1.2.12 Approval and Certification after Conclusion of the Project Developer Determination and Qualifications Review

A. At the next FRCC Board meeting after successful completion of the items in sections 1.2.3 through 1.2.11 above, the FRCC Board will notify the project developer to proceed with the project as it has been approved for inclusion in the regional transmission plan. It is at this point that any transmission projects currently in the regional transmission plan that are being avoided due to the new CEERTS project will be removed from the regional transmission plan. The project developer(s) shall then proceed with obtaining the necessary approvals and/or permits required to construct, own and operate the project, including certification under the Transmission Line Siting Act.

1.2.13 The FRCC PC, under the oversight of the FRCC Board, will verify that all required reliability, operational, and property rights provisions listed below are in place, or reasonably planned for, after a CEERTS project is included in the regional transmission plan pursuant to section 1.2.12. The FRCC Board will monitor such elements and progress toward such elements in determining whether a CEERTS project has been delayed or abandoned.

A. All certification and other requirements under the NERC Standards and Rules of Procedure;

B. Implementation of communications and operational control features (e.g., requirements to follow instructions of the Reliability Coordinator, Balancing Authority and/or Transmission Service Provider);

C. Responsibility for operation and maintenance ("O&M"), including any plans to turn over O&M responsibilities to another entity; and

D. Acquisition of the property rights necessary to construct the CEERTS

facilities, or a reasonable expectation of the ability to acquire such rights.

1.2.14 As identified in section 1.2.2, new CEERTS projects are to be submitted by June 1 of the first year of each biennial regional projects planning cycle. The technical evaluation of a new CEERTS project will occur within approximately 12 months concurrent with the evaluation of the initial FRCC regional transmission plan, and final approval will be achieved within 19 months. This time period may be shorter for some CEERTS projects, such as where the project developer has previously satisfied qualification criteria and/or the project is relatively small in scale. Following the evaluation steps identified in this section 1.2 for a newly proposed CEERTS project, a sponsor can expect the project to be analyzed with the regional transmission plan as a tentative project in the summer or fall of the following year. For the project to remain in the regional transmission plan, the remainder of the process must be completed. For example, a new CEERTS project that was proposed by June 1 in biennial year 1 would proceed through section 1.2.7 in the fall of biennial year 1 through the winter of biennial year 2. In the spring and summer of biennial year 2, the project would progress through the items in section 1.2.9 and be tentatively added to the regional transmission plan. Successful completion of the items in sections 1.2.10 through 1.2.12 would qualify the project for final approval in December of biennial year 2, roughly 19 months after it was initially proposed. This overall schedule provides a roadmap of the projected schedule for new CEERTS project evaluation, selection, approval and ultimate reflection in the regional transmission plan within the mandatory two year (biennial) planning cycle. A particular CEERTS project submittal may benefit from schedule flexibility or shortening of process steps depending on the project's nature or complexity, availability of qualified project developer(s), or other factors. In all cases, once a CEERTS project is submitted, the FRCC will keep all parties informed of the projected schedule for project evaluation. This CEERTS project evaluation process will fold into the overall regional transmission planning cycle, which will continue to be an annual process, that is, a regional transmission plan will continue to be developed each year. The inclusion of the CEERTS projects into the annual regional transmission plan will be in accordance with the process outlined above.

1.2.15 After a CEERTS project is approved for the regional transmission plan, the project developer shall submit to the FRCC PC a development schedule that sets forth the required steps necessary to develop and construct the project and the schedule that the developer will follow to satisfy each required step. Required steps include, but are not limited to, obtaining all regulatory approvals necessary to develop and construct the facility.

1.2.16 Status updates of a CEERTS project are required at any time when material changes to the project or schedule take place, or at least annually, and must include any revised cost estimate. If the cost estimate for a CEERTS project is substantially more than the cost estimate upon which the project was approved, the FRCC PC and FRCC Board may re-examine the cost effectiveness of the project.

1.2.17 If a CEERTS reliability-based project is abandoned by the developer the Transmission Provider(s) has a right of first refusal to complete the project to the extent it is located in the Transmission Provider's service territory. However, if the Transmission Provider decides not to complete the abandoned reliability-based CEERTS project and decides instead to propose an alternative CEERTS project, then other potential developers will be given an opportunity to propose an alternative CEERTS project to ensure that the reliability need is met. Developer evaluation and selection shall follow the steps above for a CEERTS project when first proposed. If a non-reliability-based CEERTS project is abandoned by the developer, other potential developers may offer to complete the project. Developer evaluation and selection shall follow the steps above for a CEERTS project when first proposed.

1.2.18 If a delay in the completion of a CEERTS reliability-based project potentially would cause Transmission Provider or other NERC-registered entity to violate a Reliability Standard, the NERC-registered entity shall inform the FRCC as soon as it is aware of the possibility. The FRCC PC will re-evaluate the regional transmission plan to determine if the delay in the CEERTS project requires the evaluation of alternative solutions to ensure the relevant Transmission Provider or other NERC-registered entity can continue to meet its reliability and/or other service obligations. If the FRCC PC determines that the delay in the CEERTS project would adversely affect reliability (e.g., would cause a violation of one or more NERC reliability standards), the FRCC PC will initiate a process to evaluate solutions to address the reliability concerns. The transmission providers whose system(s) are affected by these reliability concerns will be given an opportunity to propose solutions that they would implement within their service territories or footprints to address these reliability concerns, and their proposals can be evaluated as possible CEERTS projects if such transmission providers agree. The FRCC PC will fully evaluate the original CEERTS project delay along with any proposals for alternate solutions and will make a determination on how to proceed in a timely manner to ensure that the FRCC regional transmission plan supports the adequate planning for a reliable transmission system for the FRCC Region. Where possible, the review of a CEERTS project delay will be included within the biennial regional transmission planning cycle. However, if the FRCC PC determines that a CEERTS project delay needs to be evaluated outside of the biennial regional projects planning cycle, the FRCC PC will notify the members and establish a schedule for the evaluation process. The FRCC PC will follow similar steps that are identified in sections 1.2.9.C and 1.2.9.D to develop a report of the results of their evaluation and provide their findings to the FRCC Board for ultimate resolution.

1.2.19 The Transmission Provider retains the right to construct local transmission projects that are not subject to regional cost allocation to meet reliability needs and/or service obligations within its retail distribution service territory or footprint.

1.2.20 Nothing herein shall adversely affect the ability of Transmission Provider to comply with state and federal law, including its service obligations under the laws and regulations of the Florida Public Service Commission and its reliability obligations under section 215 of the Federal Power Act ("FPA").

1.3 The FRCC Regional Transmission Planning Process is intended to ensure the long-term reliability, economic and public policy needs of the bulk power system in the FRCC Region (see section 1.3 endnote). An objective of the FRCC Regional Transmission Planning Process is to ensure coordination of the transmission planning activities within the FRCC Region in order to provide for the development of a reliable and economically robust transmission network in the FRCC Region. The process is intended to develop a regional transmission plan to meet the existing and future requirements of all customers/users, providers, owners, and operators of the transmission system in a coordinated, open and transparent manner.

The FRCC obtains and posts transmission owners' 10-year expansion plans on the FRCC website. All transmission providers/owners provide their long-term firm transmission service requests and generator interconnection service requests to the FRCC in a common format. The FRCC consolidates all requests for coordination purposes, and posts the consolidated requests available for viewing by all FRCC members.

Section 1.3 Endnote: Nothing in the *FRCC Regional Transmission Planning Process* is intended to limit or override rights or obligations of transmission providers, owners and/or transmission customers/users contained in any rate schedules, tariffs or binding regulatory orders issued by applicable federal, state or local agencies. In the event that a conflict arises between the FRCC process and the rights and obligations included in those rate schedules, tariffs or regulatory orders, and the conflict cannot be mutually resolved among the appropriate transmission providers, owners, or customers/users, any affected party may seek a resolution from the appropriate regulatory agencies or judicial bodies having jurisdiction.

1.3.1 This coordinated *FRCC Regional Transmission Planning Process* offers many opportunities for transmission providers to interact with customers and neighboring systems during the development of the transmission plan. The schedule of committee and subcommittee meetings related to transmission planning is posted on the FRCC website under *FRCC Calendar*.

FRCC meeting notices, meeting minutes and documents of FRCC PC and/or FRCC Board meetings in which transmission plans or related study results are exchanged, discussed or presented are distributed by the FRCC. Detailed evaluation and analysis of the transmission providers/owners plans are conducted by the FRCC Transmission Technical Subcommittee ("TTS") and Stability Analysis Subcommittee ("SAS") in concert with the FRCC Staff. The TTS and SAS are further described below.

1.4 A general scope of the FRCC PC and the respective committees and subcommittees related to transmission planning is described below. The scope of these committees is

subject to change in the future in order to address evolving needs. The members of the FRCC PC and the subcommittees related to transmission planning are posted on the FRCC website under *FRCC Committees.* Contact with the FRCC PC and transmission subcommittees can be made through FRCC staff or through the chair of the respective committee orsubcommittee.

1.4.1 The FRCC PC promotes the reliability of the Bulk Power System in the FRCC, and assesses and encourages generation and transmission adequacy. The FRCC PC reports to the Board of Directors. Rules and procedures governing the FRCC PC are posted on the FRCC website under *Rules of Procedure for FRCC Standing Committees*. Subcommittees related to transmission planning reporting to the FRCC PC are described below.

1.4.2 The Transmission Technical Subcommittee engages in active coordination of transmission planning within the FRCC Region under the direction of the FRCC PC, and performs the duties as required by the *FRCC Regional Transmission Planning Process*. Some of the responsibilities and objectives of the Transmission Technical Subcommittee are: 1) Maintain, update and provide summer and winter database cases for the FRCC including the bulk power transmission and generation systems, projected loads and any facility additions for an eleven year period; 2) Put together the FERC Form 715 filing and EIA-411 for FRCC members, prepare State of Florida electrical maps, etc.

1.4.3 The Stability Analysis Subcommittee engages in the active coordination of transmission planning in the FRCC Region, assesses stability of the FRCC bulk electric system under various conditions, and provides support to the other FRCC subcommittees as needed. Some of the responsibilities and objectives of the Stability Analysis Subcommittee are: 1) Maintain and update a dynamic data base for the FRCC Region; this data base is coordinated with selected FRCC planning horizon power flow cases as required by the Multi-regional Modeling Working Group and other FRCC study needs; 2) Assess dynamic performance of the FRCC bulk power system in response to relevant NERC planning horizon standard contingencies which includes special protection systems, under frequency load shedding programs, oscillatory stability, disturbances involving separation, etc.

Section 2 Openness

2.1 Transmission Provider provides notice and schedules meetings with its transmission customers as deemed necessary by the transmission customer and/or Transmission Provider. Transmission Provider schedules meetings with its customers to interact, exchange perspectives or share findings from studies. Transmission Provider communicates and interacts with its transmission service customers on a regular basis to discuss loads, generation/network resource additions/deletions, new facility additions and upgrades, demand resource information, customers' projections of future needs, and related subjects that have an impact on the provision of transmission service to a customer. Transmission Provider provides a status update to its customers on a regular

basis or at any time, if requested by a customer. Additionally, Appendix 1 to this Attachment N-2 describes the customer and Transmission Provider interaction in the flow diagram and outlines the steps of the Local Transmission Network Planning Process.

2.2 This openness principle is also incorporated in the *FRCC Regional Transmission Planning Process* by which the Transmission Provider participates, along with other parties, in the committee and working processes at the FRCC as described below. The participants in the planning process at the FRCC are the sector representative of the FRCC PC. A list of representatives may be found on the FRCC website under the *FRCC PC Member List.* The *Rules of Procedure for FRCC Standing Committees* document on the FRCC website describes the FRCC PC structure and processes as they relate to Organization Structure, Standing Committee Representation, Standing Committee Quorum and Voting, Duties of Officers and Representatives, General Procedures for Standing Committees, FRCC Representation on NERC Committees, Procedures of Minutes of Meetings and Conduct of the Meeting. Interested entities or persons may participate in the committees via participation within one of the identified sectors (Supplier Sector, Non-Investor Owned Utility Wholesale Sector, Load Serving Entity Sector (including municipals and cooperatives), Generating Load Serving Entity Sector, Investor Owned Utility Sector, and General Sector (this sector provides for any entity or individual's participation)). Moreover, at the FRCC regional level interested entities have an opportunity to raise any special requirements that they have and believe have not been addressed at the local level. For ease of reference, the FRCC quorum and voting provisions are shown in Appendix 2 of Attachment N-2.

2.2.1 The FRCC meeting dates are provided in the *FRCC Calendar* document on the FRCC website and the chairs and member representatives for the various committees are posted on the FRCC website under the *FRCC Committees*. The meeting agenda for the FRCC PC is normally provided prior to the meeting to the committee members.

FRCC meeting notices, meeting minutes and documents of FRCC PC and/or FRCC Board meetings in which transmission plans or related study results will be exchanged, discussed or presented, are distributed by the FRCC.

2.2.2 The FRCC developed the *FERC Standards of Conduct Protocols* for the *FRCC* document for the purpose of ensuring proper disclosure of transmission information in accordance with FERC requirements. The primary rule is that a transmission provider must treat all transmission customers, affiliated and non-affiliated on a non-discriminatory basis, and it cannot operate its transmission system to give a preference to any transmission customer or to share non-public transmission or customer information with any transmission customer. The rules also prevent transmission function employees from sharing with their merchant employees and certain affiliates non-public transmission information about the transmission provider's transmission system or any other transmission system, which is information that the affiliated merchant employee receiving the information could use to commercial advantage. Reference the *FERC Standards of Conduct Protocols for the FRCC* posted on the FRCC website.

2.3 Customer input is included in the early stages of the development of the transmission plans, as well as during and after plan evaluation processes. Detailed evaluation and analysis of the transmission providers'/owners' plans are conducted by the FRCC Transmission Technical Subcommittee and Stability Analysis Subcommittee under the direction of the FRCC PC. Such evaluation and analysis provides the basis for possible changes to the transmission providers'/owners' plans that could result in a more reliable and more robust transmission system for the FRCC Region. The FRCC PC meets on a regular basis, usually monthly, with appropriate prior notice.

2.4 The FRCC conducts the FRCC planning process in an open manner in such a way that it ensures fair treatment for all customers/users, owners and operators of the transmission system. Stakeholders have access to and participate in the FRCC planning process. The committees and subcommittees described in this document are stakeholder groups. The FRCC PC consists of six stakeholder sectors: Suppliers, Non-Investor Owned Utility Wholesalers, Load Serving Entities, Generating Load Serving Entities, Investor Owned Utilities, and General. The rules of procedure governing the FRCC PC in conducting the *FRCC Regional Transmission Planning Process* are posted under the *Rules of Procedure for FRCC Standing Committees* on the FRCC website. The FPSC is updated on, and encouraged to participate in the *FRCC Regional Transmission Planning Process* as appropriate.

2.5 The *FRCC Regional Transmission Planning Process* provides for the overall protection of all confidential and proprietary information that is used to support the planning process. A customer, user or other interested entity may enter into a confidentiality agreement with the FRCC and/or applicable transmission provider/owner, as appropriate, to be eligible to receive transmission information that is restricted due to Critical Energy Infrastructure Information ("CEII"), security, business rules and standards and/or other limitations. The procedure for requesting this type of information is delineated at the FRCC website.

Section 3 Transparency

3.1 Transmission Provider plans its transmission system in accordance with the NERC and SERC Reliability Standards, along with Transmission Provider's own design, planning and operating criteria which it utilizes for all customers on a comparable and non-discriminatory basis. These standards/criteria are also referred to in the Transmission Provider's FERC Form 715. In addition, Transmission Provider makes available Facility Connection Requirements, Capacity Benefit Margin ("CBM") Methodology and other pertinent information used in the transmission planning process and posts this information on the Transmission Provider's OASIS website.

3.2 During the Transmission Provider's local area planning process the Transmission Provider utilizes the FRCC databanks which contain information provided by the Transmission Provider and customers of projected loads as well as all planned and committed transmission and generation projects, including upgrades, new facilities and changes to planned-in-service dates over the planning horizon, as the base case for Transmission Provider's studies. Transmission Provider makes available to a

transmission service customer the underlying data, assumptions, criteria and underlying transmission plans utilized in the study process. Transmission Provider provides written descriptions of the basic methodology, criteria and processes used to develop plans. In order to get a better understanding, a transmission customer may inquire about the assumptions, data and/or underlying methods, criteria, etc. and the customer will be provided a response by the Transmission Provider's qualified technical representative. Dialogue during the study process is encouraged. The dialogue during the Transmission Provider's local area planning process between the Transmission Provider and customers involves discussions of the initial findings that affect customers, potential alternatives including feasibility of mitigating any adverse findings, and third party impacts. Discussion of initial findings in areas of the system that affect customers is intended to communicate and validate with the customer issues or concerns identified by the Transmission Provider or conversely, issues not specifically identified by the Transmission Provider that may be of concern to the customers. As part of the process of identifying potential alternatives to mitigate any adverse issue or concern, the dialogue with the customer should facilitate the identification of the most effective solution. This dialogue during the different stages of the planning process provides for meaningful input and participation of transmission customers in the development of the transmission plan. The goal of this interaction between the Transmission Provider and customers is to develop a transmission expansion plan that meets the needs of the Transmission Provider and customer in a reliable cost effective manner. This planning process between the Transmission Provider and customers is described in the process flow diagram below and in the more detailed description of the Local Transmission Network Planning Process as set forth in Appendix 1 to this Attachment N-2.

3.3 An overview of the Transmission Provider's local area planning process and how it relates to the *FRCC Regional Transmission Planning Process* is shown in the flow chart below:

TRANSMISSION PROVIDER's (TP) LOCAL / REGIONAL COORDINATED TRANSMISSION NETWORK PLANNING PROCESS OVERVIEW

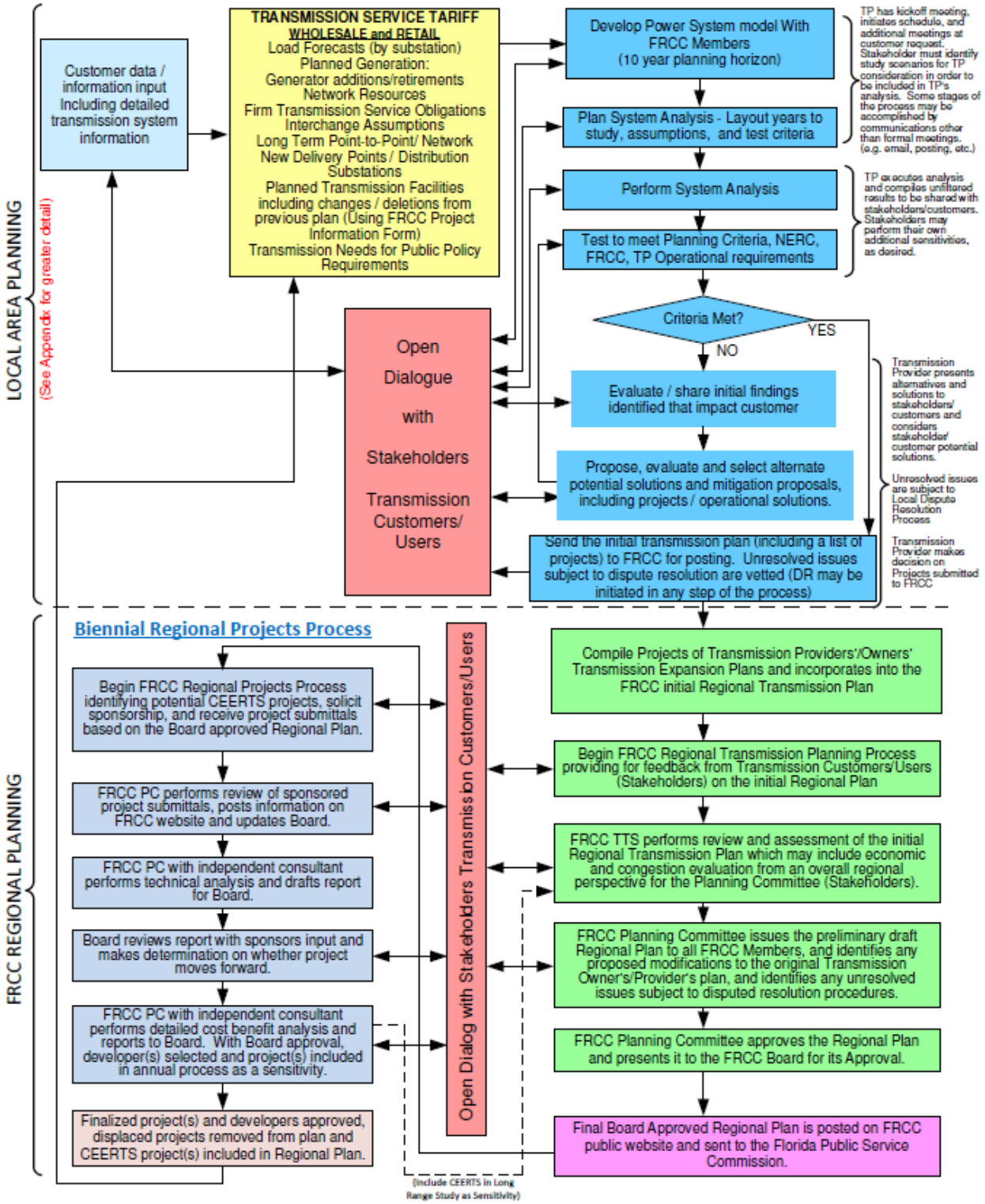

Once the results of the Transmission Provider's local area planning process are reflected in the *FRCC Regional Transmission Planning Process*, the FRCC seeks input and feedback from transmission customers/users for any issues or concerns that are identified and independently assesses the initial regional transmission plan from a FRCC regional perspective. A dialogue among the FRCC, transmission customers/users, and transmission owners/providers occurs to address any issues identified during this process. When the FRCC regional transmission plan has been approved by the FRCC PC, it is sent to the FRCC Board for approval. After the FRCC Board approves the FRCC regional transmission plan, it is posted on the FRCC website and sent to the FPSC. Additionally, the FRCC compiles all of the individual transmission providers'/owners' FERC Form 715s within the FRCC Region, including Transmission Provider's, and files FERC Form 715s for its members with the FERC on an annual basis.

3.4 Studies conducted pursuant to the *FRCC Regional Transmission Planning Process* utilize the applicable reliability standards and criteria of the SERC and NERC that apply to the Bulk Power System as defined by NERC. Such studies also utilize the specific design, operating and planning criteria used by FRCC transmission providers/owners. The transmission planning criteria are available to all customers and stakeholders. Transmission planning assumptions, transmission projects/upgrades and project descriptions, scheduled in-service dates for transmission projects and the project status of upgrades will be available to all customers through the FRCC periodic project update process. The FRCC updates and distributes transmission projects/upgrades project descriptions, scheduled in-service dates, and project status on a regular basis, no less than quarterly. The FRCC also updates and distributes on a periodic basis the load flow data base. The FRCC publishes the individual transmission providers' system impact study schedules so that other potentially impacted transmission owners can assess whether they are affected and elect to participate in the study analysis. The FRCC planning studies are also distributed by the FRCC and updated as needed. All entities that have transmission projects/upgrades in the regional transmission plan shall provide updates on such projects at least annually.

3.5 The FRCC also produces the following annual reports which are submitted/available to the FPSC:

- The Regional Load and Resource Plan contains aggregate data on demand and energy, capacity and reserves, and proposed new generating unit and transmission line additions for Peninsular Florida as well as statewide.

- The Reliability Assessment is an aggregate study of generating unit availability, forced outage rates, load forecast methodologies, and gas pipeline availability.

- The Long Range Transmission Reliability Study is an assessment of the adequacy of Peninsular Florida's bulk power and transmission system. The study includes both short-term (1-5 years) detailed analysis and long-term (6-10 years) evaluation of developing trends that would require transmission

additions or other corrective action. Updates on regional areas of interest and/or constraints (e.g., Central Florida) are also addressed.

Section 4 Information Exchange

4.1 Transmission Provider participates in information exchange on a regular and ongoing basis with the FRCC, neighboring utilities, and customers. Transmission customers are required to submit data for the planning process described in this Attachment N-2 to the Transmission Provider in order for the Transmission Provider to plan for the needs of network and point-to-point customers. This data/information shall be provided by the transmission customer by no later than January 1 of each year. Such data/information includes load growth projections, planned generation resource additions/upgrades (including network resources), any demand response resources, new delivery points, new or continuation of long-term firm point-to-point transactions with specific receipt (i.e., source or electrical location of generation resources) and delivery points, (i.e., the electrical location of load or sink where the power will be delivered to), and planned transmission facilities. This data/information shall be provided over the 10 year planning horizon to the extent such information is known. Additionally, the transmission customer shall provide timely written notice of any material changes to this data/information as soon as practicable due to the possible effect on the transmission plan or the ability of the Transmission Provider to provide service.

4.2 The Transmission Provider utilizes the information provided in modeling and assessing the performance of its system in order to develop a transmission plan that meets the needs of all customers of the transmission system. The Transmission Provider exchanges information with a transmission customer to provide an opportunity for the transmission customer to evaluate the initial study findings or to propose potential alternative transmission solutions for consideration by the Transmission Provider. If the Transmission Provider and transmission customer agree that the transmission customer's recommended solution is the best overall transmission solution then such solution will be incorporated in the Transmission Provider's plan. Through this information exchange process the transmission customer has an integral role in the development of the transmission plan. This process is described in greater detail in Appendix 1 to this Attachment N-2. Consistent with the Transmission Provider's obligation under federal and state law, and under NERC and SERC reliability standards, the Transmission Provider is ultimately responsible for the transmission plan.

4.3 The FRCC TTS sets the schedule for data submittal and frequency of information exchange which starts at the beginning of each calendar year. Updates and revisions are discussed at the FRCC PC meetings by the members. This process requires extensive coordination and information exchange over a period of several months as the FRCC develops electric power system load-flow databank models for the FRCC Region. The models include data for every utility in Peninsular Florida and are developed and maintained by the FRCC. The TTS is responsible for developing and maintaining power flow base cases. The FRCC power flow base case models contain the data used by the FRCC and transmission providers for intra- and inter-regional assessment studies, and other system studies. The models created also are the basis for the FRCC submittal to the

Multi-regional Modeling Working Group ("MMWG"). TTS members support the data collection requirements and guidelines related to the accurate modeling of generation, transmission and load in the power flow cases. The data collected includes:

For power flow models:

- Bus data; (name, base voltage, type, area assignment, zone assignment, owner)
- Load data; (bus, MW, MVAR, area assignment, zone assignment, owner)
- Generator data; (bus, machine number, MW, MVAR, status, PMAX, PMIN, QMAX, QMIN, MVA base, voltage set-point, regulating bus)
- Branch data; (from bus, to bus, circuit number, impedances, ratings, status, length, owner)
- Transformer data; (from bus, to bus, to bus, circuit number, status, winding impedances, ratings, taps, voltage control bus, voltage limits, owner)
- Area interchange data; (area, slack bus, desired interchange, tolerance)
- Switched shunt data
- Facts device data

For dynamic stability models (in addition to power flow model data):

- Generator models; (turbine, generator, governor, exciter, power system stabilizers)
- Relay models; (distance, out of step, underfrequency)
- Special protection scheme models

For short circuit models (in addition to power flow model data):

- Zero and negative sequence impedances;

The databank models are compiled and incorporate load projections by substations, firm transmission services, and transmission expansion projects over the 10 year planning horizon. Transmission Provider utilizes the FRCC databanks which contain projected loads as well as all planned and committed transmission and generation projects, including upgrades, new facilities and changes to planned in-service dates over the planning horizon, as the base case for Transmission Provider's studies. These databanks are maintained by the FRCC Transmission Technical Subcommittee and are updated on a

periodic basis to ensure that the assumptions are current. Transmission Provider makes available to a transmission service customer the underlying data, assumptions, criteria and transmission plans utilized in the study process. If information is deemed confidential, Transmission Provider requires the customer to enter into a confidentiality agreement prior to providing the confidential information.

4.4 The FRCC maintains a databank of all FRCC members' projected loads and planned and committed transmission and generation projects, including upgrades, new facilities, and changes to planned in-service dates. These databanks are updated on a periodic basis. The FRCC maintains and updates the load flow, short circuit, and stability models. All of this above information is distributed by the FRCC, along with the FRCC transmission planning studies, subject to possible redaction of user sensitive or critical infrastructure information consistent with market and business rules and standards.

4.5 Any transmission developer that is not participating in the regional transmission planning process (and therefore not seeking regulated cost-of-service recovery) that proposes to develop a transmission project in the FRCC Region shall provide to the FRCC PC and affected transmission providers in the FRCC Region such information and data related to its proposed project that are necessary to allow the FRCC PC and affected transmission providers in the FRCC Region to assess the potential reliability and operational impacts of the non-participant developer's proposed transmission facility on the transmission system in the region. That information should include: transmission project timing, scope, network terminations, load flow data, stability data, HVDC data (as applicable), and other technical data necessary to assess potential impacts.

The required information and data shall be provided with the transmission developer's interconnection request(s). Non-participant developers' transmission projects will not be included in long-term planning models or interconnected to the existing transmission system until and unless: 1) interconnection service has been requested of affected transmission provider(s); and 2) all interconnection studies have been completed.

Section 5 Comparability

5.1 This comparability principle is applied in all aspects of the transmission planning process including each of the respective principles in this Attachment N-2. Transmission Provider incorporates into its transmission plans on a comparable basis all firm transmission obligations, both retail and wholesale. The retail obligations consist of load growth, interconnection and integration of new network resources, firm power purchases and new distribution substations. Transmission Provider wholesale obligations are existing firm wholesale power sales, existing long-term firm transmission service including firm point-to-point and network (interconnection and integration of network resources), projected network load, generator interconnections, and new delivery points.

5.2 Transmission Provider plans for forecasted load, generation additions/upgrades which include network resources and new distribution substations associated with retail service obligations. A network transmission customer provides corresponding data as part of the provision of service, such as load forecast data, generation additions/upgrades including

network resource forecast, new delivery points, and other information needed by the Transmission Provider to plan for the needs of the customer. Both Transmission Provider and the transmission customers reflect their demand response resources within the information that is input within this planning process. The data required for planning the transmission system for both retail and wholesale customers is comparable. Transmission customers/users (retail and wholesale) accurately reflect their demand response resources appropriately in their load forecast projections. To the extent a customer/stakeholder has a demand response resource or a generation resource that is not incorporated into its submitted plans and such customer/stakeholder desires the Transmission Provider to specifically consider on a comparable basis such demand response resource or generation resource as an alternative to transmission expansion, or in conjunction with the Transmission Provider's transmission expansion plan, such customer/stakeholder sponsoring such demand response resource or generation resource shall provide the necessary information (cost, performance, lead time to install, etc.) in order for the Transmission Provider to consider such demand response resource or generation resource alternatives comparably with other alternatives. Any customer/stakeholder sponsoring a demand response resource or generation alternative should participate in the planning process. The Transmission Provider shall treat customer/stakeholder resources and its own resources on a comparable basis for transmission planning purposes. This comparability principle is also further described under the Local Transmission Planning Process as set forth in Appendix 1 to this Attachment N-2. The data/information is also provided to the FRCC for its use in databank development and analysis under the *FRCC Regional Transmission Planning Process*. These data requirements are generally communicated by OASIS, email, letter or combination thereof.

5.3 Transmission providers/owners submit to the FRCC their latest 10-year expansion plans for their transmission systems, which incorporate the transmission expansion needed to meet the transmission customer requirements, including a list of transmission projects that provides for all of the firm obligations based on the best available information. The FRCC compiles and distributes a list of projects distributed from the transmission providers/owners and updates the project status to keep the list current. FRCC compiles and distributes the transmission providers/owners' 10-year expansion plans. All transmission users and other affected parties are asked to submit to the FRCC any issues or special needs that they believe are not adequately addressed in the expansion plans.

5.4 Transmission providers that own or control or have been approved to own or control transmission facilities in the FRCC Region may enroll in the FRCC regional planning process. These transmission providers must satisfy one of two enrollment criteria: (1) registered with NERC as a Transmission Service Provider or a Transmission Owner within the FRCC Region; or (2) selected to develop a CEERTS project. Should a NERC-registered Transmission Service Provider or a Transmission Owner that owns or provides transmission service over facilities located adjacent to, and interconnected with, transmission facilities within the FRCC Region provide an application to enroll in the FRCC regional planning process, such a request to expand the FRCC regional planning region will be considered by the FRCC. An entity may request enrollment in the

planning process for purposes of regional cost allocation by submitting a written or email communication by authorized representative to the FRCC identifying that it is seeking to enroll. The FRCC will validate the request against the above criteria, provide a response back to the entity making the request in seven business days, and if the request is granted, which granting makes the enrollment effective, the FRCC will request that the Transmission Provider make the necessary OATT change to add the entity to the below list of enrolled transmission providers with a requested effective date of the date that the request was granted. Transmission providers that do not enroll in the regional planning process will not be obligated to pay the costs of transmission facilities that would otherwise be allocable to them under Order No. 1000, nor will their projects be eligible for Order No. 1000 cost allocation. If a developer that has been selected to develop a CEERTS project and is not also a Transmission Service Provider or Transmission Owner within the FRCC Region abandons such project and that developer does not have any other approved CEERTS project, the FRCC will notify the developer that steps will be taken to remove it from the current list of enrolled transmission providers. Below is the current list of enrolled transmission providers:

Duke Energy Florida, LLC

Florida Power & Light Company

JEA

Orlando Utilities Commission

Tampa Electric Company

Florida Municipal Power Agency

Seminole Electric Cooperative, Inc.

City of Tallahassee, Florida

5.5 A non-public utility transmission provider choosing to withdraw its enrollment in the FRCC regional planning process may do so by providing written notification of such intent to the Transmission Provider. A non-public utility's withdrawal shall be effective as of the date the notice of withdrawal is provided to the Transmission Provider. The withdrawing non-public utility will be subject to regional cost allocations, if any, that were approved in accordance with this Attachment N-2 during the period in which it was enrolled and was determined to be a beneficiary. Any withdrawing non-public utility will not be allocated costs for regionally cost-allocated projects approved after its termination of enrollment becomes effective. Any withdrawing non-public utility will continue to be able to recover costs allocated to the beneficiaries of CEERTS projects that were allocated pursuant to this tariff until it has recovered such costs.

5.6 If a non-public utility transmission provider withdraws, the Transmission Provider shall submit to FERC an update to the list of enrolled transmission providers with a proposed

effective date for the relevant tariff record that reflects the effective date of the withdrawal.

Section 6 Dispute Resolution

6.1 If a dispute arises between a transmission customer and the Transmission Provider under the local transmission planning process set forth in Appendix 1 to this Attachment N-2 or involving Transmission Service under the Tariff, the senior representatives of the Transmission Provider and the customer shall attempt to resolve the dispute and may mutually agree to utilize a mediation service for that purpose. However, if such dispute is not resolved, then the Dispute Resolution Procedures set forth in Article 12 of the Tariff shall govern. If a dispute arises under this Attachment N-2 involving the *FRCC Regional Transmission Planning Process* and/or cost allocation thereunder, then the Dispute Resolution Procedures set forth in Appendix 5 shall govern resolution of the dispute and the FRCC will notify the FPSC of any such dispute.

Section 7 Regional Participation

7.1 The *FRCC Regional Transmission Planning Process* begins with the consolidation of the long term transmission plans of all of the transmission providers/owners in the FRCC Region. Such transmission plans incorporate the integration of new firm resources as well as other firm commitments. Any generating or transmission entity not required to submit a 10 year plan to the FPSC submits its 10 year expansion plan to the FRCC, together with any issues or special needs they believe are not adequately addressed by the transmission providers/owners' 10 year plans. The FRCC process requires that the FRCC PC address any issue or area of concern not previously or adequately addressed with emphasis on constructing a more robust regional transmission system.

7.2 Each transmission provider/owner furnishes the FRCC with a study schedule for each system impact study so that other potentially affected transmission providers/owners can independently assess whether they may be affected by the request, and elect to participate in or monitor the study process. If a transmission provider/owner believes that it may be affected, it may participate in the study process.

7.3 FRCC has a reliability coordination arrangement with Southern Company Services, Inc. ("Southern"), which is located in the Southeastern Subregion of SERC Reliability Corporation ("SERC"). The purpose of the reliability coordination arrangement is to safeguard and augment the reliability on an inter-regional basis for Southern and the FRCC bulk power supply systems. This arrangement provides for exchanges of information and system data between Southern and the FRCC for the coordination of planning and operations in the interest of reliability. The arrangement also provides the mechanism for inter-regional joint studies and recommendations designed to improve the reliability of the interconnected bulk power system. The arrangement contributes to the safeguarding and augmenting of reliability through: (1) coordination of generation and transmission system planning, construction, operating, and protection to maintain maximum reliability; (2) coordination of interconnection lines and facilities for full implementation of mutual assistance in emergencies; (3) initiation of joint studies and

investigations pertaining to the reliability of bulk power supply facilities; (4) coordination of maintenance schedules of generating units and transmission lines; (5) determination of requirements for necessary communication between the parties; (6) coordination of load relief measures and restoration procedures; (7) coordination of spinning reserve requirements; (8) coordination of voltage levels and reactive power supply; (9) other matters relating to the reliability of bulk power supply required to meet customer service requirements; and (10) exchange of necessary information, such as magnitude and characteristics of actual and forecasted loads, capability of generating facilities, programs of capacity additions, capability of bulk power interchange facilities, plant and system emergencies, unit outages, and line outages.

7.4 Southern Companies, Kentucky Utilities Company ("KU") and Louisville Gas and Electric Company ("LG&E") (collectively "LG&E/KU"), Associated Electric Cooperative Inc., PowerSouth Energy Cooperative, Dalton Utilities, Georgia Transmission Corporation, the Municipal Electric Authority of Georgia, South Mississippi Electric Power Association, Duke Energy Carolinas, and Duke Energy Progress sponsor the Southeastern Regional Transmission Planning ("SERTP") forum. The FRCC and the SERTP have established their respective links to transmission providers and FRCC/SERTP websites as applicable that contain study methodologies, joint transmission studies, and inter-regional transmission service and generator interconnection service related studies. The FRCC website includes links that contain this type of information. Please refer to a document entitled *FRCC Inter-regional Coordination Process* that describes how information, modeling data and expansion plans are shared. The SERTP website link is http://www.southeasternrtp.com. FRCC and SERTP transmission providers plan to attend transmission planning forums when study findings are presented to stakeholders that impact their respective transmission systems.

7.5 [Reserved].

Section 8 Economic Planning Studies

8.1 In the performance of an economic sensitivity study that is identified as part of the *FRCC Regional Transmission Planning Process*, Transmission Provider plans to participate in such study utilizing the procedures that are contained in the *FRCC Regional Transmission Planning Process*. If Transmission Provider receives a specific request to perform economic studies for a transmission customer, Transmission Provider plans to utilize the OASIS for such requests. To the extent an economic study would involve other transmission providers/owners, Transmission Provider will coordinate with these providers/owners in performing the study. Stakeholders will collectively be allowed to request the performance of up to five (5) economic planning studies annually, at no charge to the individual requesting customer(s). The cost of the sixth and subsequent economic planning studies requested in a calendar year shall be assessed to the individual customer(s) requesting such studies. If there are similar interests for certain economic studies, stakeholders can coordinate with each other and the Transmission Provider during the transmission planning process to collectively select the five no-charge economic studies. If more than five economic planning studies are requested and the

stakeholders are unable to agree on the selection of the five no-charge economic planning studies, then the Transmission Provider will select the five no-charge economic planning studies by selecting one study per stakeholder based on the time the economic planning study was submitted on OASIS (up to a maximum of five stakeholders) and continuing this iterative process until the five no-cost economic planning studies have been selected. In the event the Transmission Provider receives more than one request for an economic planning study which the Transmission Provider determines: (i) will have overlapping time periods of study; (ii) may involve the same facilities; and (iii) can be reasonably performed on a clustered basis, then the Transmission Provider will, either at the request of transmission customer(s) requesting the studies or if the Transmission Provider deems it to be appropriate, offer to cluster two or more qualifying study requests which meet the aforementioned criteria for an economic planning study. Transmission customers agreeing to the clustering must also agree: (i) to remain in the cluster throughout the performance of the study; and (ii) to share equally in the cost of the study, to the extent that there are such costs (i.e., for economic planning study requests beyond the first five in any calendar year). The Transmission Provider will consider an economic planning cluster study under this section as a single study in the context of the number of studies done at no cost each year.

8.2 The *FRCC Regional Transmission Planning Process* includes both economic and congestion studies. One of the sensitivities may include evaluating the FRCC Region with various generation dispatches that test or stress the transmission system, including economic dispatch from all generation (firm and non-firm) in the region. Other sensitivities may include specific areas where a combination/cluster of generation and load serving capability involving various transmission providers/owners in the FRCC experiences or may experience significant and recurring transmission congestion on their transmission facilities. Members of the FRCC PC may also request specific economic analyses that would examine potential generation resource options, demand resource options, or other types of regional economic studies, and to the extent information is available, may request a study of the cost of congestion. The FRCC PC may consider clustering studies as appropriate. Economic analyses should reflect the upgrades to integrate necessary new generation resources and/or loads on an aggregate or regional (cluster) basis.

Section 9 Cost Allocation

Subsections 9.1 – 9.3 apply to cost allocation for third party impacts resulting from the FRCC regional planning process; subsection 9.4 applies to cost allocation for CEERTS projects. The cost allocation provisions contained in the section relate to cost allocation procedures for specific circumstances as described herein. All other transmission cost allocation not specifically described below is provided in accordance with OATT provisions for generation interconnection and for network and point-to-point transmission service.

9.1 If a transmission expansion is identified as needed under the *FRCC Regional Transmission Planning Process* and such transmission expansion results in a material adverse system impact upon a third party transmission owner, the third party transmission owner may choose to utilize the FRCC Principles for Sharing of Certain Transmission

Expansion Costs as outlined below in this Attachment N-2. The FPSC is involved in this process and provides oversight, guidance and may exercise its statutory authority as appropriate. A more detailed description of the FRCC Principles for Sharing of Certain Transmission Expansion Costs can be found on the FRCC website.

9.2 The FRCC Principles for Sharing of Certain Transmission Expansion Costs: (i) sets forth certain principles regarding the provision of financial funding to Transmission Owners (note: for this purpose, "Transmission Owner" means an electric utility owning transmission facilities in the FRCC Region) that undertake remedial upgrades to, or expansions of, their systems resulting from upgrades, expansions, or provisions of services on the systems of *other* Transmission Owners, and (ii) procedures for attempting to resolve disputes among Transmission Owners and other parties regarding the application of such principles. These principles shall not apply to transmission upgrades or expansions if, and to the extent that, the costs thereof are subject to recovery by a Transmission Owner pursuant to FERC Order No. 2003 or Order No. 2006.

9.3 Principles

9.3.1 Except for a CEERTS project for which it is not the project developer, each Transmission Owner in the FRCC Region shall be responsible for upgrading or expanding its transmission system in accordance with the *FRCC Regional Transmission Planning Process* consistent with applicable NERC and SERC Reliability Standards and shall participate, directly or indirectly (as the member of a participating Transmission Owner, e.g., Seminole Electric Cooperative, Inc. and Florida Municipal Power Agency), in the *FRCC Regional Transmission Planning Process* in planning all upgrades and expansions to its system.

9.3.2 If, and to the extent that, the need for a 230 kV or above upgrade to, or expansion of, the transmission system of one Transmission Owner (the "Affected Transmission Owner") is reasonably expected to result from, upgrade(s) or expansion(s) to, or new provisions of service on, the system(s) of another Transmission Owner or Transmission Owners (hereinafter "Precipitating Events"), and if such need is reasonably expected to arise within the FRCC planning horizon, the Affected Transmission Owner shall be entitled to receive Financial Assistance (as defined herein) from each other such Transmission Owner and other parties, to the extent consistent with the other provisions hereof. Such upgrade or expansion to the Affected Transmission Owner's system shall hereinafter be referred to as the "Remedial Upgrade." Upgrade(s), expansion(s), or provisions of service on another Transmission Owner's system that may result in the need for a Remedial Upgrade on the Affected Transmission Owner's system for which Financial Assistance is to be provided hereunder include the following Precipitating Events:

- A new generating unit(s) to serve incremental load

- A new or increased long-term sale(s)/purchase(s) to or by others (different uses)

- A new or modified long-term designation of Network Resource(s)

- A new or increased long-term, firm reservation for point-to-point transmission service

Specific non-Precipitating Events are as follows: 1) Transmission requests that have already been confirmed prior to adoption of these principles; 2) Qualifying rollover agreements that are subsequently rolled over; 3) Redirected transmission service for sources to the extent the redirected service does not meet the Threshold Criteria described in subsection 9.3.5.A. Existing flows would not be considered "incremental."; and 4) Repowered generation if the MW output of the facility is not increased, regardless of whether the repowered unit is used more/less hours of the year.

9.3.3 Except for a CEERTS project for which it is not the project developer and except to the extent that an Affected Transmission Owner is entitled to Financial Assistance from other parties as provided herein, each Transmission Owner shall be responsible for all costs of upgrades to, and expansions of, its transmission system; provided, however, that nothing herein is intended to affect the right of any Transmission Owner or another party from obtaining remuneration from other parties to the extent allowed by contract or otherwise pursuant to applicable law or regulation (including, for example, through rates to a Transmission Owner's customers).

9.3.4 Except for a CEERTS project for which it is not the project developer, each Transmission Owner shall be solely responsible for the execution, or acquisition, of all engineering, permitting, rights-of-way, materials, and equipment, and for the construction of facilities comprising upgrades or expansions, including Remedial Upgrades, of its transmission system; provided, however, that nothing herein is intended to preclude a Transmission Owner from seeking to require another party to undertake some or all of such responsibilities to the extent allowed by contract or otherwise pursuant to applicable law.

9.3.5 Threshold Criteria: The following criteria ("Threshold Criteria") must be satisfied in order for an Affected Transmission Owner to be entitled to receive Financial Assistance from another party or parties in connection with a Remedial Upgrade:

A. A change in power flow of at least a 5% or 25 MW, whichever is greater, on the Affected Transmission Owner's facilities which results in a NERC or SERC Reliability Standards violation;

B. The Transmission Expansion must be 230 kV or higher voltage; and

C. The costs associated with the Transmission Expansion must exceed $3.5 million.

9.3.6 In order for a Transmission Owner to be entitled to receive Financial Assistance from another party or parties hereunder in connection with a particular Remedial Upgrade, that Transmission Owner must: (i) participate, directly or indirectly, in the *FRCC Regional Transmission Planning Process*, and (ii) identify itself as an Affected Transmission Owner and identify the subject Remedial Upgrade in a timely manner once it learns of the need for that Remedial Upgrade.

9.3.7 The following principles govern the nature and amount of Financial Assistance that an Affected Transmission Owner is entitled to receive from one or more other parties with respect to a Remedial Upgrade:

A. A recognition of the reasonably determined benefits that result from the Remedial Upgrades due to the elimination or deferral of otherwise planned transmission upgrades or expansions.

B. Remedial Upgrade costs, net of recognized benefits, shall be allocated fifty-fifty, respectively, based on:

- The sources or cluster of sources which are causing the need for the transmission expansion; and

- The load in the area or zone associated with the need for the Transmission Expansion. (For these purposes, network customer loads embedded within a transmission provider's service area in the Transmission Zone would not be separately allocated any costs as such loads would be paying their load ratio share of the affected transmission provider's costs.)

C. Initially, there are six zones in the FRCC Region. A request by a party to modify one or more zones should be substantiated on its merits (e.g., technical analysis, area of limited transmission capability). Below are principles that will guide how the boundaries of zones are determined:

- Electrically, a substantial amount of the generation within a zone is used to serve load also within that zone.

- Transmission facilities in a zone are substantially electrically independent of other zones.

- Zones represent electrical demarcation areas in the FRCC transmission grid that can be supported from a technical perspective.

D. The Financial Assistance provided to an Affected Transmission Owner related to one or more transmission service requests keyed to new sources of power is subject to repayment without interest over a ten year period through credits for transmission service charges by the funding party and at the end of ten years through payment of any outstanding balance.

9.3.8 Implementation and Dispute Resolution Process:

A. As soon as practical after a Transmission Owner shall have identified itself as an Affected Transmission Owner because of the need for a Remedial Upgrade, that Transmission Owner and parties whose actions shall have contributed, or are reasonably expected to contribute, to the need for that Remedial Upgrade which may be responsible for providing Financial Assistance in connection therewith in accordance herewith shall enter into good faith negotiations to: (i) confirm the need and cause for the Remedial Upgrade and their respective responsibilities for providing Financial Assistance to the Affected Transmission Owner, and (ii) establish a fair and reasonable schedule and means by which such Financial Assistance is to be provided to the Affected Transmission Owner.

B. In the event the parties identified in the foregoing subsection are unable to reach agreement on the determination or assignment of cost responsibility within a sixty (60) day period, the dispute shall be resolved pursuant to the Dispute Resolution Procedures in Appendix 5.

C. Nothing in this document is intended to abrogate or mitigate any rights a party may have before any regulatory or other body having jurisdiction.

D. During those circumstances in which this section 9.3.8 pertaining to Dispute Resolution Process is being utilized due to parties being unable to reach agreement on the determination or assignment of cost responsibility associated with a Remedial Upgrade(s), the parties shall continue in parallel with the Dispute Resolution Process with the engineering, permitting and siting associated with the Remedial Upgrade(s). *The fact that a matter is subject to Dispute Resolution hereunder shall not be a basis for any party being relieved of its obligations under this document.*

9.4 Cost Allocation for CEERTS Projects

9.4.1 There are three potential sets of CEERTS project costs that will be allocated: developer costs, related local project costs, and displacement costs. The general principle is to allocate all of the prudently-incurred costs of a CEERTS project to the entities that benefit from the project in proportion to the benefits received, although a CEERTS project developer may accept a cost cap for the developer costs, in which case the developer's costs up to the cost cap will be allocated. Cost allocations are determined in terms of percentages, with each beneficiary allocated a percentage of the CEERTS project costs. Entities that receive no benefit from a CEERTS project will not be allocated any project costs.

9.4.2 Project beneficiaries for a CEERTS project will be transmission providers within the FRCC Region enrolled in the regional planning process (on behalf of their retail and wholesale customers) which will benefit from the project.

9.4.3 The cost allocation for CEERTS reliability/economic projects is based on the following formula using terms defined in section 1.2.9.C: ((TP Estimated Avoided Project Cost Benefit + TP Estimated Alternative Project Cost Benefit + TP Estimated Transmission Line Loss Value Benefit) / (Total Estimated Avoided Project Cost Benefit + Total Estimated Alternative Project Cost Benefit + Total Estimated Transmission Line Loss Value Benefit)) * Estimated CEERTS Project Cost. The cost allocation dollar amounts calculated here using estimated cost information will further be translated to a percentage for each beneficiary as a ratio of their allocated share of the total estimated cost of the CEERTS project. These percentages will be used to allocate actual CEERTS project costs that are recoverable pursuant to the applicable subsection of section 9.4.5. Examples of CEERTS project cost allocation are provided in Appendix 4, Examples 1 and 2.

9.4.4 The costs for CEERTS public policy projects that are identified through the process described in section 11 will be allocated to the enrolled transmission providers whose transmission systems provide access to the public policy resources. The cost allocation for each enrolled transmission provider will be as follows:

- Individual enrolled transmission provider MWs = number of megawatts of public policy resources enabled by the public policy project for the customers (including Native Load) within their transmission service territory.

- Total MWs = total number of megawatts of public policy resources enabled by the public policy project.

- Individual enrolled transmission provider cost allocation percentage = (Individual enrolled transmission provider MWs/Total MWs).

An example of the CEERTS public policy cost allocation is provided in Appendix 4, Example 3. These percentages will be used to allocate actual CEERTS project costs that are recoverable pursuant to the applicable subsection of section 9.4.5.

The process to interconnect individual generation resources is provided for under the generator interconnection section of each utility's OATT and not under this process.

Requests for transmission service that originate in a utility's system and terminate at the border shall be handled through that utility's OATT.

9.4.5 Transmission Project Funding and Rate Base/Cost Recovery:

A. If incumbent enrolled transmission providers are the only transmission developers for a particular project, then they shall have two options in the initial transmission project funding and subsequent cost recovery of developer costs. Note that if an incumbent enrolled transmission provider

develops a CEERTS project and is not FERC-jurisdictional, it will make any requisite FERC filings through the declaratory order process used for non-jurisdictional enrolled transmission providers rather than under FPA section 205:

(1) Incumbent enrolled transmission providers may fund the transmission project in proportion to their cost responsibility for the project. For the portions of the projects that each of the companies were building that are related to their cost responsibility, the companies would include those transmission costs as identified in a Contribution in Aid to Construction (CIAC) filing at FERC within their respective rate bases and transmission revenue requirements. The costs would be reflected in FERC filed OATT rates in Account 107, Construction Work in Progress. When the assets go into service, the balance will be moved to Account 101, Electric Plant in Service and the Units of Property will be unitized to the FERC Accounts corresponding to the Units of Property. This treatment is for accounting purposes: a FERC filing and FERC approval would still be required to include Construction Work in Progress in rates. For the portion of the funding that was being provided for the transmission to be built by someone other than the incumbent, the payments by the incumbent (for their cost responsibility) would be recorded in Account 303, Miscellaneous Intangible Plant and amortized by debiting Account 404, Amortization of Limited-Term Electric Plant, and crediting Account 111, Accumulated Provision for Amortization of Electric Utility Plant. The amortization of the investment would be derived using a composite factor based on the most recently approved depreciation rates for the constructing company. The calculation of the composite factor would be based on the Units of Property installed in the transmission project. The amortization will begin when the project is declared in service. The costs and amortization would be reflected in FERC filed OATT rates until the investment is fully amortized to expense. The company receiving the money would treat these monies as a CIAC and thus have no associated net book investment in its transmission rate base. CIAC agreements will be filed with FERC prior to any CIAC payments being made to the constructing developer. Enrolled transmission providers with formula-based OATT rates shall submit a separate FPA section 205 filing with FERC for authorization to include the intangible asset investment and amortization expense in the formula rate. Traditional cost-based ratemaking procedures would be used to determine the impact of including the intangible asset investment in rate base and the amortization expense in operating expenses in deriving OATT rates. CIAC agreements filed with FERC would include workpapers to support the costs included in the determination of revenue requirements. See Example 1 provided in Appendix 6 for more detail and accounting treatment.

(2) Incumbent enrolled transmission providers may fund the portion of the transmission project that their company would be building/developing.

Incumbent enrolled transmission providers would include the total transmission project costs that they are funding within their respective rate bases and transmission revenue requirements for recovery in their routine rate processes. For those portions of the project costs that are over and above their cost responsibility, the incumbent enrolled transmission providers would file with FERC for authorization to recover their Transmission Revenue Requirement ("TRR") associated with those project costs to be directly assigned to the beneficiary(ies) responsible for that portion of the cost assignment. The TRR when received by the incumbent developer would be treated as a revenue credit recorded in Account 456, Miscellaneous Revenue in its cost of service to offset the inclusion of other beneficiary(ies) assigned cost in rate base and revenue requirement. In addition to including the TRR for those portions of the project costs that were over and above their cost responsibility, the incumbent enrolled transmission providers would also include any TRR costs allocated to them in their FERC-filed cost of service in support of FERC-approved OATT rates. Enrolled transmission providers with formula-based OATT rates shall submit a separate FPA section 205 filing with FERC for authorization to include their allocated TRR costs in the formula rate. See Example 2 provided in Appendix 6 for more detail and accounting treatment.

B. If a non-incumbent developer builds the CEERTS project, it shall file with FERC for authorization to recover its developer costs in the form of a TRR from the incumbent enrolled transmission providers in accordance with their cost responsibilities as determined by the cost allocation methodologies. The incumbent enrolled transmission providers may include those costs allocated to them in their respective wholesale rates (*e.g.*, in FERC-filed cost of service in support of FERC approved OATT rates). Enrolled transmission providers with formula-based OATT rates shall submit a separate FPA section 205 filing with FERC to include their allocated TRR costs in the formula rate. See Example 3 provided in Appendix 6 for more detail and accounting treatment.

C. Incumbent enrolled transmission providers with formula-based OATT rates shall be allowed to revise their formula rates to include the intangible asset investment balance as directly assignable transmission function rate base, and amortization expense should be included as transmission function specific expense. Formula-based OATT rates shall be revised by submitting a separate FPA section 205 filing with FERC.

D. Enrolled transmission provider(s) will be responsible for recovering their related local project costs from the beneficiaries allocated such costs through a FPA section 205 filing if the enrolled transmission provider is FERC-jurisdictional or through FERC's declaratory order process if the enrolled transmission provider is non-jurisdictional.

E. Enrolled transmission provider(s) will be responsible for recovering their actual displacement costs, if applicable, through a FPA section 205 filing if the enrolled transmission provider is FERC-jurisdictional or through FERC's declaratory order process for non-jurisdictional enrolled transmission owners. In such filing, the enrolled transmission provider(s) will allocate displacement costs in the same manner as the CEERTS project costs are allocated.

9.4.6 Neighboring Transmission Planning Region Potential Cost Impacts Not Included in FRCC's CEERTS Cost:

The costs associated with any required upgrades identified through the FRCC's CEERTS project evaluation process identified in section 1.2.9.F for the neighboring transmission planning region will not be included in the CEERTS cost within the FRCC. However, nothing in this Attachment N-2 prevents the beneficiaries or project sponsor of a CEERTS project that causes the need for upgrades in another region from voluntarily negotiating a resolution of the project impacts with the transmission owner(s) in the other region.

9.4.7 Allocation of Transmission Rights:

Enrolled transmission providers allocated costs of CEERTS projects shall have priority with regard to any transmission rights associated with such projects, in proportion to their respective share of such costs. Any use of the transmission rights allocated to the Transmission Provider, including use by the Transmission Provider itself, shall be governed by this Tariff.

Section 10 Recovery of Planning Costs

10.1 Planning study costs incurred by the Transmission Provider in the performance of studies requested by a customer/stakeholder associated with transmission service or generator interconnection service are separately addressed in this tariff under provisions that require the customer/stakeholder to pay the cost of such studies. Planning study costs incurred by the Transmission Provider in the performance of the first five economic planning studies will be absorbed by the Transmission Provider in its normal course of business of performing its obligations under this Attachment N-2. The cost of the sixth and additional economic planning studies in a calendar year will be assessed to the requesting entity as set forth in section 8.1. Other general transmission planning costs not associated with the above studies are routine cost-of-service items that would be reflected in both wholesale and retail transmission rates as appropriate.

Section 11 Public Policy Planning

11.1 To be considered in transmission planning, a public policy requirement must be reflected in state, federal, or local law or regulation (including an order of a state, federal, or local agency). If a stakeholder identifies a transmission need that is driven by a public policy requirement, it must submit a written description of the need to the FRCC PC, prior to January 1st of the first year of the biennial regional projects planning cycle, for

consideration in regional planning during that planning cycle. To the extent the information is available to the stakeholder, the description of the need should: 1) identify the state, federal, or local law or regulation that contains the public policy requirement; 2) identify the type of entity(ies) in the region to which the public policy requirement applies; 3) identify the subset of entities in the region subject to the public policy requirement that have a transmission need driven by the public policy requirement; 4) describe the type and nature of the transmission service, including the number of megawatts, needed from the enrolled transmission providers by such subset of entities to meet that transmission need. Any stakeholder submitting a potential public policy transmission need to the FRCC PC may, but is not required to, also propose a transmission project(s) to meet such a need along with its description of the need. All submissions will be posted on the FRCC website for public comment and will be reviewed to determine if a public policy requirement is driving a transmission need for which a solution is required. The FRCC PC, under the oversight of the FRCC Board, may seek, on a voluntary basis, additional information from entities identified as having potential needs and then will evaluate the submittals and any additional information to make a decision as to whether a public policy requirement is driving a transmission need for which a solution is required and will post this determination on the FRCC website prior to March 1st of the first year of the biennial regional projects planning cycle, along with an explanation and record of that determination (including a negative determination). If a public policy transmission need is identified for which a solution is required, CEERTS and local projects shall be proposed to address such a need.

Appendix 1 to Attachment N-2

Local Transmission Network Planning Process – Process Description

The Local Transmission Network Planning Process ("Local Process") is performed annually with the Transmission Provider's plan being finalized on or about April 1st of each calendar year. The times shown (in months) for each of the steps contained in the Local Process are target dates that recognize some potential overlapping of the various activities. The Transmission Provider may develop a different timeline where warranted with the concurrence of the Transmission Provider's Customers/Stakeholders. The timelines and dates in this Appendix 1 to Attachment N-2 are to be used as guidelines subject to modification (modified or expedited) as warranted. It is also recognized and understood that under the Transmission Provider's OATT, there are certain FERC mandated timelines that are applied to Transmission Service Requests ("TSRs") and Generator Interconnection Service Requests ("GISRs") that may conflict and be of higher priority than the Local Process. Therefore, Transmission Provider's receipt of TSRs and/or GISRs may require the modification, from time to time, of the timelines described below.

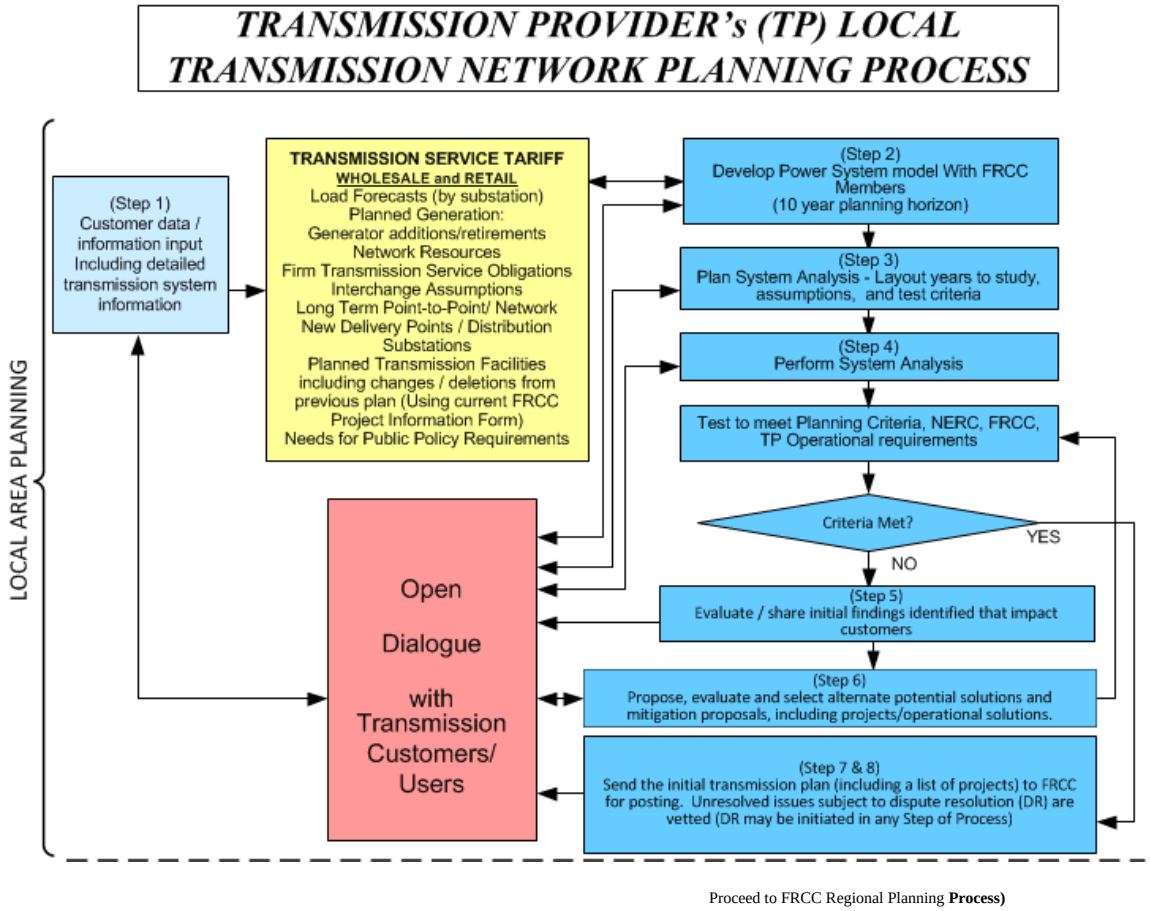

(Proceed to FRCC Regional Planning Process)

Local Transmission Network Planning Process – Process Description Overview:

- The Transmission Provider, which is ultimately responsible for the development of the Transmission Provider's annual 10 Year Expansion Plan, will lead the Local Process on a coordinated basis with the Customers/Stakeholders. This Local Transmission Planning Process will be implemented in such a manner as to ensure the development of the Local Transmission Plan in a timely manner. The Transmission Provider will facilitate each meeting throughout the process. The Transmission Provider will encourage an open dialogue and the sharing of information with Customers/Stakeholders (subject to confidentiality requirements and FERC Standards of Conduct – *note:* the provision for handling of information also applies to all steps of the Local Process) in the development of the Local Transmission Plan.

- Customers/Stakeholders are invited to participate in the Transmission Provider's Local Process.

- The Local Process will comply with the FERC nine principles as well as the provisions below.

- All annual initial kick-off meetings will be open to all Customers/Stakeholders and noticed by the Transmission Provider to all Customers/Stakeholders with sufficient time to arrange for travel planning and attendance (two week minimum). The annual initial kick-off meeting will be a face-to-face meeting; otherwise, with the consent of the Customers/Stakeholders, meetings may be organized as face-to-face meetings, conference calls, web-ex events, etc., wherein the dialogue and communications will be open, direct, detailed, and consistent with the FERC Standards of Conduct and confidentiality requirements.

- The Customers/Stakeholders may initiate the dispute resolution process at any point in the Local Process where agreement between the Transmission Provider and Customer(s)/Stakeholder(s) cannot be reached.

- The entities generally responsible for undertaking the tasks described below are designated as the TP (Transmission Provider) and/or the S (Customers/Stakeholders).

The study process will include the following steps:

A. Data Submission Requirements (STEP 1 – 3 months)

In order for The Transmission Provider to carry out its responsibility of developing the Transmission Provider's annual 10 Year Expansion Plan and leading the Local Process on a coordinated basis with the Customers/Stakeholders, data submission by the Customer/Stakeholder on a timely manner (on or before January 1st of each year) is essential. As such, the following data submission requirements from Customers/Stakeholders to the Transmission Provider are established. The Customers/Stakeholders will submit

data to the Transmission Provider in a format that is compatible with the transmission planning tools in common use by the Transmission Provider. The Transmission Provider will identify the data format to be used by the Customers/Stakeholders for all data submissions, or absent a Transmission Provider identified data format, the Customers/Stakeholders will use their discretion in selection of data format. Examples of data that may be required are:

- Load forecasts, if appropriate:

  - Coincident and non-coincident Peak load forecasts will be provided for the subsequent 11 years, for each summer and winter peak season, with real power and reactive power values for each load serving substation (reflected to the transformer high-side) or delivery Point, as applicable.

- Transmission Delivery Points, if appropriate:

  - Delivery Point additions and/or Delivery Point modifications that have not previously been noticed to the Transmission Provider will be communicated by the Customer/Stakeholder to the Transmission Provider via the standard Delivery Point Request letter process.

  - Delivery Point additions and/or Delivery Point modifications that have not previously been included in the FRCC Databank Transmission Planning models will be provided by the Customers/Stakeholders to the Transmission Provider via the standard FRCC Project Information Sheet ("PIF") per the attached Transmission Provider provided form and by the Siemens PTI PSS/E IDEV file format, compatible with the Siemens PTI PSS/E version in common use throughout the FRCC Region at that time.

- Network Resource Forecast, if appropriate:

  - Network Resource forecasts will be provided for the subsequent 11 years, for each summer and winter peak season. At a minimum, the following data will be provided: 1. the name of each network resource; 2. the total capacity of each network resource; 3. the net capacity of each resource; 4. the designated network capacity of each resource; 5. the Balancing Authority Area wherein each network resource is interconnected to the transmission grid; 6. the transmission path utilized to deliver the capacity and energy of each network resource to the Transmission Provider's transmission system; 7. the Transmission Provider's point of receipt of each network resource; 8. the contract term of each network resource, if not an owned network resource; and 9. the dispatch order of the entire portfolio of network resources (subject to confidentiality requirements and Standards of Conduct).

- Needs driven by public policy requirements, if appropriate:

- To be considered in the local transmission network planning process, a public policy requirement must be reflected in state, federal, or local law or regulation (including an order of a state, federal, or local agency). If a stakeholder identifies a transmission need that is driven by a public policy requirement, it must submit a written description of the need to the Transmission Provider, for consideration in local planning during that planning cycle. To the extent the information is available to the stakeholder, the description of the need should:

    1) Identify the state, federal, or local law or regulation that contains the public policy requirement;

    2) Identify the type of entity(ies) in the Transmission Provider's area to which the public policy requirement applies;

    3) Identify the subset of entities in the area subject to the public policy requirement that have a transmission need driven by the public policy requirement;

    4) Describe the type and nature of the transmission service needed from the transmission provider by such subset of entities to meet that transmission need.

- How, where, and to whom, the data will be submitted to:

    - If hardcopy, the Transmission Provider will provide the mailing address;

    - If faxed, the Transmission Provider will provide the fax number;

    - If e-mailed, the Transmission Provider will provide the e-mail address;

    - If delivered to a password protected FTP site or e-vault, the Transmission Provider will provide the folder for the data, the contact person to be notified of the data delivery, etc. consistent with confidentially requirements and FERC Standards of Conduct.

The Transmission Provider will provide the name and contact details for the Transmission Provider point of contact for data submittal questions.

B. Stakeholder Data Submissions (S) (STEP 1 – con't)

- On or before January 1st of each calendar year, the Customers/Stakeholders will submit the required data (as directed by the Transmission Provider procedures communicated in A. above), plus any additional data that they believe is relevant to the process.

- On or before January 1st of each calendar year, the Customers/Stakeholders will submit to the Transmission Provider the name(s) and contact details for those individuals that will represent them as the point(s) of contact for resolution of any data submittal or study questions/conflicts.

- On or before January 1st of each calendar year, the Customers/Stakeholders will submit the name(s) of those individuals that will represent them during the FRCC Data Bank Transmission Planning Model development process and throughout the Local Process. Name(s), contact details, and their FERC Standards of Conduct status (i.e., Reliability Only, Merchant function, etc.) will be provided. The contact individuals can be changed by the Customers/Stakeholders with notice to Transmission Provider.

- On or before January 1st of each calendar year, the Customers/Stakeholders will submit a written description of a transmission need that a Stakeholder believes is driven by a public policy requirement to the Transmission Provider. Any stakeholder submitting a potential public policy transmission need to the Transmission Provider may, but is not required to, also propose a transmission project(s) to meet such a need along with its description of the need.

  - All submissions will be posted on the Transmission Provider's website for public comment and will be reviewed to determine if a public policy requirement is driving a transmission need for which a solution is required.

  - The Transmission Provider may seek, on a voluntary basis, additional information from entities identified as having potential needs and then will evaluate the submittals and any additional information to make a decision as to whether a public policy requirement is driving a transmission need for which a solution is required and will post this determination on the Transmission Provider's website prior to April 1st of the local transmission network planning cycle, along with an explanation and record of that determination (including a negative determination). If a public policy transmission need is identified for which a solution is required local projects shall be proposed to address such a need.

C. FRCC Data Bank Transmission Planning Model Development Process (TP/S) (STEP 2 – 2 months)

- The FRCC Regional Data Bank Development Process will control the model development schedule and work product as established by the applicable FRCC subcommittee.

D. Kick-off for Transmission Provider's Local Transmission Network Planning Process (STEP 2 – con't - 1 month)

- The Transmission Provider will, approximately two (2) weeks prior to the second quarter initial kick-off meeting (or other date, if Transmission Provider and Customers/Stakeholders agree), communicate via e-mail with all Customers/Stakeholders the schedule/coordination details of the Transmission Provider's Local Process kick-off meeting(s). Customer/Stakeholder shall provide to Transmission Provider a confirmation of their intent to participate in the initial kick-off meeting at least three (3) days prior to such meeting. (TP)

- The Transmission Provider will, in advance of the Kick-off meeting(s), with sufficient time for Customer/Stakeholder review, provide to the Customers/Stakeholders a proposed study schedule, the NERC and SERC Reliability Standards that will apply to the study, and/or guidelines that will apply to the study and Transmission Provider developed criteria that will apply to the study, including public policy requirements. (TP)

- The initial Kick-off meeting in the second quarter of the calendar year will begin the Transmission Provider's Local Process. The Transmission Provider will review and validate the input data assumptions received from each Customer/Stakeholder, discuss the proposed study schedule, and discuss the study requirements, which will include, but not be limited to, the following:

  - The methodologies that will be used to carry out the study (TP/S)

  - The specific software programs that will be utilized to perform the analysis (TP)

  - The Years to study (TP/S)

  - The load levels to be studied (e.g., peak, shoulder and light loads) (TP/S)

  - The criteria for determining transmission contingencies for the analysis (i.e. methods, areas, zones, voltages, generators, etc.) (TP/S)

  - The Individual company criteria (i.e., thermal, voltage, stability and short circuit) by which the study results will be measured (TP/S)

  - The NERC reliability standards by which the study results will be measured (TP/S)

  - The FRCC reliability requirements by which the study results will be measured (TP/S)

- Customer/Stakeholder proposed study scenarios for Transmission Provider consideration in the analysis (TP/S)

- Potential solutions proposed by Stakeholders to identified transmission needs driven by public policy requirements (TP/S)

- The kick-off process will be complete when the schedule, standards, criteria, rules, tools, methods and Customer/Stakeholder participation are finalized for the study process to (described below) begin. (TP/S)

E. Case Development (TP) (STEP 3 – 1 month)

- Utilizing all of the data received from the Customers/Stakeholders during the data submission stage and the standards, criteria, rules, tools, and methods determined in the kick-off meeting(s), the Transmission Provider will develop the base case models to be used for the study. These models will be developed in the Siemens PTI PSS/E file format, compatible with the Siemens PTI PSS/E version in use by the Transmission Provider.

- Utilizing all of the data received from the Customers/Stakeholders during the data submission stage and the standards, criteria, rules, tools, and methods determine in the kick-off meeting, the Transmission Provider will develop the change case models to be used for the study. These models will be developed in the Siemens PTI PSS/E file format, compatible with the Siemens PTI PSS/E version in use by the Transmission Provider.

- The Transmission Provider will electronically post and provide notice to the Customers/Stakeholders of the posting of the base case models, the change case models and/or the IDEV files.

F. Perform System Analysis (STEP 4 - 1 to 2 months)

- The Transmission Provider will perform the study analyses (verification that thermal, voltage, stability and short circuit values meet all planning criteria) on the local transmission plan (including potential solutions to identified transmission needs driven by public policy requirements) and produce the initial unfiltered, un-processed input data, output data, and files. (TP).

- The Transmission Provider will electronically post and provide notice to the Customers/Stakeholders of the posting of the initial unfiltered, un-processed input data, output data, and files. (TP/S)

G. Assessment and Problem Identification (STEP 5 - 1 month)

- The Transmission Provider will evaluate at the local level the initial unfiltered, un-processed output data to identify any problems / issues for further investigation. The Transmission Provider will document, electronically post, and provide notice to the

Customers/Stakeholders if there is an impact to them of the posting of the evaluation results documentation associated with the impact to the Customer/Stakeholder. (TP/S)

- The Customers/Stakeholders may perform their own additional sensitivities. (S)

H. Mitigation / Alternative Development (STEP 6 - 1 to 2 months)

- The Transmission Provider will identify potential solutions / mitigation proposals, including solutions to identified transmission needs driven by public policy requirements, to address problems / issues. (TP)

- The Transmission Provider will document, electronically post, and provide notice to the Customers/Stakeholders of the posting of the identified potential solutions / mitigation proposals to address problems / issues related to the impacted Customer(s)/Stakeholder(s).

- The Customers/Stakeholders may provide alternative potential solutions / mitigation proposals, including alternative solutions to identified transmission needs driven by public policy requirements, for the Transmission Provider to consider. Such information shall be provided in IDEV format and posted. (TP/S)

- The Transmission Provider will determine the effectiveness of the potential solutions through additional studies (thermal, voltage, stability and short circuit). The Transmission Provider may modify the potential solutions, as necessary, such that required study criteria are met. (TP)

- The Transmission Provider will identify feasibility, timing and cost-effectiveness of proposed solutions that meet the study criteria. (TP/S)

I. Selection of Preferred Transmission Plan (STEP 6 con't - 1 to 2 months)

- The Transmission Provider, in consultation with the Customers/Stakeholders, will compare the alternatives and select the preferred solution / mitigation alternatives based on feasibility, timing and cost effectiveness that provide a reliable and cost-effective transmission solution, taking into account neighboring transmission providers' transmission plans. (TP/S)

- In case of Transmission Provider and Customer/Stakeholder dispute, the dispute resolution process described in section 6.1 will be utilized. (TP/S)

J. Send Selected Local Transmission Network Plan Results (Transmission Provider's Ten Year Expansion Plan) to the FRCC (STEPS 7 & 8 - 1 to 2 months)

- The Transmission Provider will submit the Transmission Provider's proposed local transmission network plan results (the Transmission Provider's 10 Year Expansion Plan) to the FRCC for posting with other transmission plans as the FRCC's initial

regional transmission expansion plan (reference the *Initial Plans* on the FRCC website), along with an indication whether there are any pending disagreements regarding the Plan (and if there are, will elicit from the dissenting entity(ies), and provide, a minority report regarding such differences of opinion). The Transmission Provider's 10 Year Expansion Plan will include all transmission system projects without differentiation between bulk transmission system projects and lower voltage transmission system projects (i.e. all projects 69 kV and above). This Transmission Provider submittal to the FRCC will be made on or about April 1 and will become part of the initial FRCC regional transmission plan. (TP)

- The *FRCC Regional Planning Process* will now start and the FRCC Regional Planning Process rules and guidelines will now control the transmission planning process. (TP/S)

- Following completion of the Transmission Provider's submission of the local transmission network plan results (the Transmission Provider's 10 Year Expansion Plan) to the FRCC, the Transmission Provider will, either directly or through the FRCC project status reporting process, make available to the Customers/Stakeholders project descriptions, project scheduled in-service dates, project status, etc. for all projects. This information should be updated no less often than quarterly. (TP)

Appendix 2 to Attachment N-2

FRCC Quorum and Voting Sectors

Note: The below descriptions of the FRCC's Quorum and Voting provisions were extracted from the FRCC *Rules of Procedure for FRCC Standing Committees.* The FRCC PC is one of the Standing Committees within the FRCC.

A. Quorum

Representation at any meeting of the standing committees of 60% or more of the total voting strength of the Standing Committee, shall constitute a quorum for the transaction of business at such meeting; provided, however, that action on matters dealing with the scope or funding of Member Services shall require sixty percent (60%) or more of the total voting strength of members of the Standing Committee representing Voting Members that are Services Members; and provided further that a quorum shall require that at least three (3) Sectors are represented, all three of which shall be Sectors, a majority of the members of which are Services Members in the case of a quorum for action on matters governing Member Services.

If a quorum is not present at any meeting of the standing committees, then no actions may be taken for the purpose of voting. The representatives present may decide to have discussions concerning agenda items as long as voting is not called.

B. Voting

Voting is by Sector. Each voting representative present at a meeting is assigned a vote equal to the voting strength of their Sector, as provided in this section, divided by the number of voting representatives present in that Sector, except that no voting representative present at a meeting shall have more than one (1) vote, except an Investor Owned Utility Sector voting representative who may have up to 1.167 votes. Action by the Standing Committee shall require an affirmative vote equal to or greater than sixty percent (60%) of the total voting strength of the Standing Committee.

Sector Votes

(1) Suppliers Sector
2.5 Votes

(2) Non-Investor Owned Utility Wholesale Sector 2 Votes

(3) Load Serving Entity Sector

Municipal
0.5 Vote

Cooperative
0.5 Vote

(4) Generating Load Serving Entity Sector 3.0 Votes

(5) Investor Owned Utility Sector 3.5 Votes

(6) General
1 Vote

Total
13 Votes

Appendix 3 to Attachment N-2

Project Developer Qualification Criteria

1. Demonstration that the project developer is technically, and financially capable of (i) completing the CEERTS project in a timely and competent manner; and (ii) operating and maintaining the CEERTS facilities consistent with Good Utility Practice and applicable reliability criteria for the life of the project. To support this demonstration, the following information should be provided/shown:

   A. Project developer's current and expected capability to finance, or arrange financing for the transmission facilities:

      1. Evidence of its demonstrated experience financing or arranging financing for transmission facilities, including a description of such projects (not to exceed ten) over the previous ten years, the capital costs and financing structure of such projects, a description of any financing obtained for these projects through any approved rates, the financing closing date of such project, and whether any of the projects are in default;

      2. Its audited financial statements from the most recent three years and its most recent quarterly financial statement, or equivalent information;

      3. Current credit ratings from Moody's Investor Services and Standard & Poors, if available;

      4. A summary of any history of bankruptcy, dissolution, merger, or acquisition of the project developer or any predecessors in interest for the current calendar year and the five calendar years immediately preceding its submission of information related to affiliated entities;

      5. A summary of outstanding liens against the developer(s); and

      6. Such other evidence that demonstrates its current and expected capability to finance a CEERTS project.

         The project developer must identify the portions of this financial data that would need to be treated as confidential information in accordance with the FRCC confidentiality practices and subject to disclosure only to those that have signed a confidentiality agreement.

   B. Total dollar amount of CEERTS estimated project(s) cost up to which the project developer wants to be deemed qualified.

   C. A discussion of the project developer's business practices that demonstrate that its business practices are consistent with Good Utility Practices for proper licensing, designing, right-of-way acquisition, constructing, operating and maintaining transmission facilities that will become part of the regional transmission grid.

The project developer shall also provide the following information for the current calendar year and the previous five calendar years:

1. A summary of any violations of law by the project developer found by federal or state courts, federal regulatory agencies, state public utility commissions, other regulatory agencies, or attorneys general; and

2. A summary of any instances in which the project developer is currently under investigation or is a defendant in a proceeding involving an attorney general or any state or federal regulatory agency, for violation of any laws, including regulatory requirements.

D. Technical and engineering qualifications and experience;

E. Past history of meeting transmission project schedules;

F. Past history regarding providing construction and maintenance of transmission facilities and/or contracting for the construction and maintenance of transmission facilities;

G. Capability to adhere to standardized construction, maintenance and operating practices;

H. Plans for compliance with all applicable reliability standards:

I. Planning standards that will be used to develop the project: and

J. Plans to obtain the appropriate NERC certifications.

2. An attestation from an officer of the project developer stating that the information that is being submitted is true and that the project developer will comply with the provisions identified in the qualification data submittal, and will submit a biennial (or more often if the information provided has materially changed) update of the information submitted, accompanied by an attestation from an officer of the project developer that the previously submitted information remains correct and has not materially changed since the last attestation, with such attestation to be submitted biennially while that transmission developer has a transmission project under consideration in the FRCC Regional Planning Process, under construction in the FRCC Region or in-service within the FRCC Region.

3. For joint ventures, partnerships, or other multiple-party developer arrangements, the qualification criteria above will be applied to the designated lead entity, which will be responsible for meeting the qualification criteria. Sharing of such responsibilities with other entities may be achieved contractually between the designated lead entity and its partners.

Appendix 4 to Attachment N-2
Examples of CEERTS Cost Allocation Methodology

Example 1: Reliability/Economic Project

- CEERTS project where Enrolled Transmission Providers A, B and C all receive benefits from the project.
- The project developer is a non-incumbent developer

Assumptions:

- Estimated CEERTS Project Cost = $401M:
  - Estimated Developer Cost = $400M
  - Total Estimated Related Local Project Costs = $1M
- Total Estimated Avoided Project Cost Benefit = $500M:
  - Enrolled Transmission Provider A Estimated Avoided Project Cost Benefit = $300M
  - Enrolled Transmission Provider B Estimated Avoided Project Cost Benefit = $200M
  - Enrolled Transmission Provider C Estimated Avoided Project Cost Benefit = $0
- Total Estimated Alternative Project Cost Benefit = $0M
- Total Estimated Transmission Line Loss Value Benefit = $14M:
  - Enrolled Transmission Provider A Estimated Transmission Line Loss Value Benefit = $4M
  - Enrolled Transmission Provider B Estimated Transmission Line Loss Value Benefit = $5M
  - Enrolled Transmission Provider C Estimated Transmission Line Loss Value Benefit = $5M

Benefit to Cost Ratio:

- ("Total Estimated Avoided Project Cost Benefit" ($500M) plus "Total Estimated Alternative Project Cost Benefit" ($0M) plus "Total Estimated Transmission Line Loss Value Benefit" ($14M)) divided by Estimated CEERTS Project Cost ($401M) = 1.28, therefore this CEERTS project passes the benefit to cost ratio threshold.

CEERTS Project Cost Allocation:

- (Percentages in example are rounded to nearest whole percentage)
  - Enrolled Transmission Provider A = ($300M + $4) ÷ $514M = 59%
  - Enrolled Transmission Provider B = ($200M + $5M) ÷ $514M) = 40%
  - Enrolled Transmission Provider C = ($0 + $5M) ÷ $514M) = 1%

Example 2: Reliability/Economic Project

- CEERTS project where Enrolled Transmission Providers A & B each receive avoided cost benefits from the project
- There are no transmission loss benefits
- The project developer is a non-incumbent developer

Assumptions:

- Estimated CEERTS Project Cost = $400 M:
  - Estimated Developer Cost = $400 M
- Total Estimated Avoided Project Cost Benefit = $300 M:
  - Enrolled Transmission Provider A Estimated Avoided Project Cost Benefit = $100 M
  - Enrolled Transmission Provider B Estimated Avoided Project Cost Benefit = $200 M
- Total Estimated Alternative Project Cost Benefit = $0M

Benefit to Cost Ratio:

- "Total Estimated Avoided Project Cost Benefit" ($300 M) divided by Estimated CEERTS Project Cost ($400 M) = 0.75, therefore this CEERTS project does not pass the benefit to cost ratio threshold.

CEERTS Project Cost Allocation:

- N/A

Example 3: Public Policy Project

- CEERTS project where LSEs within Enrolled Transmission Providers A, B and C each receive benefits from the project
- The project developer is a non-incumbent developer

Assumptions:

- Public policy CEERTS project enables access to a total of 600 MW of public policy resources

- Public policy CEERTS project enables LSEs within Enrolled Transmission Providers A, B and C to access the public policy resources:

  - Enrolled Transmission Provider A = 100 MWs

  - Enrolled Transmission Provider B = 200 MWs

  - Enrolled Transmission Provider C = 300 MWs

CEERTS Project Cost Allocation:

  - Enrolled Transmission Provider A = (100 MW / 600 MW) = 17%

  - Enrolled Transmission Provider B = (200 MW / 600 MW) = 33%

  - Enrolled Transmission Provider C = (300 MW / 600 MW) = 50%

Example 4: Newly-Proposed CEERTS Project Displacing a Previously-Approved CEERTS Project

- Previously-approved CEERTS project was estimated to provide LSEs within Enrolled Transmission Provider A and B benefits

- Newly-proposed CEERTS project would displace the previously-approved CEERTS project as well as being estimated to provide LSEs within Enrolled Transmission C benefits from the newly-proposed CEERTS project

- The newly-proposed CEERTS project would displace the previously-approved CEERTS project

<u>Previously-Approved CEERTS Project:</u>

Assumptions:

- Estimated Previously-Approved CEERTS Project Cost = $75M

- Total Estimated Previously-Approved CEERTS Project Avoided Project Cost Benefit = $100M

  - Enrolled Transmission Provider A Estimated Avoided Project Cost Benefit = $50M

  - Enrolled Transmission Provider B Estimated Avoided Project Cost Benefit = $50M

Previously-Approved CEERTS Project Cost Allocation:

- (Percentages in example are rounded to nearest whole percentage)

- Enrolled Transmission Provider A = ($50M / $100M) = 50%
- Enrolled Transmission Provider B = ($50M / $100M) = 50%

Previously-Approved CEERTS Project Displaced by a Newly-Proposed CEERTS Project:

Assumptions:

- Estimated Newly-Proposed CEERTS Project = $100M
- Total Estimated Newly-Proposed CEERTS Avoided Project Cost Benefit = $125M
  - Total Estimated Previously-Approved CEERTS Project Cost Benefit = $75M
  - Enrolled Transmission Provider C Estimated Avoided Project Cost Benefit = $50M

Newly-Proposed CEERTS Project Cost Allocation:

- (Percentages in example are rounded to nearest whole percentage)
  - Previously-Approved CEERTS Project Enrolled Transmission Providers (A & B) = ($75M / $125) = 60%
    - This 60% of the cost responsibility would be allocated to Enrolled Transmission Providers A & B:
      - Enrolled Transmission Provider A = 60% * 50% = 30%
      - Enrolled Transmission Provider B = 60% * 50% = 30%
  - Enrolled Transmission Provider C = ($50M / $125M) = 40%

Appendix 5 to Attachment N-2

Dispute Resolution Procedures for Disputes Arising from the *FRCC Regional Transmission Planning Process* and/or Cost Allocation Thereunder

Section 1 Dispute Resolution.

These procedures are established for the equitable, efficient and expeditious resolution of disputes arising under this Attachment N-2 from the *FRCC Regional Transmission Planning Process* and/or cost allocation thereunder. These procedures shall be used to resolve such disputes between FRCC Members, between an FRCC Member (hereafter "Member") and a consenting non-member, or between FRCC and any Member or consenting non-member (any of the foregoing being referred to hereinafter as a "party"), arising from an act or omission by FRCC, or from an act or omission by a party in its capacity as a Member. Among other things these procedures do not apply to disputes that are covered by the dispute resolution provisions, if applicable, of the SERC Compliance Monitoring and Enforcement Program (Exhibit D to the Delegation Agreement between SERC and NERC) or other NERC dispute resolution provisions, disputes subject to other dispute resolution procedures set forth in Members' Open Access Transmission Tariffs, and/or disputes arising under Appendix 1 of this Attachment N-2, and do not supersede, unless agreed to by the parties, any dispute resolution agreement between the parties applicable to a dispute .

These procedures supersede the dispute resolution provisions in the *FRCC Regional Transmission Planning Process*.

Multiple parties with the same or substantially similar interests may be joined in the same proceeding.

The parties are strongly encouraged to take part in the complete process described herein prior to initiation of judicial proceedings or the utilization of other external dispute resolution processes, but the use of any of the steps of the process shall not be a required condition for the initiation of judicial or regulatory proceedings or the utilization of other external dispute resolution processes, including the filing of a complaint pursuant to Section 206 of the Federal Power Act.

FRCC shall be involved in the administration of a proceeding as provided in section 5 to coordinate with the parties to facilitate the resolution of the dispute, and to provide personnel, coordination, and meeting and other facilities as specified herein.

Section 2 Initiation.

Any Member, consenting non-member or FRCC (the "Invoking Party") may initiate these dispute resolution procedures by making a request in writing to the FRCC President & CEO with a copy to all other parties to the dispute; provided, however, that if FRCC initiates the dispute, FRCC shall make a request in writing to the Chair of the FRCC Board of Directors, with a copy

to the FRCC Vice Chair and all other parties. The copy of the dispute resolution request for each party shall be sent to and accepted by the Member representative appointed in accordance with Section 1.7 of the FRCC Bylaws. The FRCC President & CEO will inform the FRCC Board of Directors of the initiation of any dispute resolution proceedings, and the docket number and title assigned to the dispute. The request must contain:

(a) a statement of the issues in dispute;

(b) the position of the party on each of the issues;

(c) the relief sought by the party;

(d) an explanation of the asserted right to such relief under an applicable tariff, contract or other legal standard or obligation;

(e) the dispute resolution step under Section 4 at which the party proposes to begin; and

(f) any proposed modifications or specific additions to the proceedings described in this Dispute Resolution Procedure by which the dispute may be resolved.

Each person or entity identified as party to the dispute (a "Noticed Party") shall submit a response to the request to the FRCC President, the FRCC Chair and FRCC Vice Chair, and each other party to the dispute (the "Dispute Response"). Each response shall set forth the position of the party on each of the points identified above. A party shall have 20 business days from its receipt of the request to submit its Dispute Response.

Section 3 Dispute Resolution Process.

The dispute resolution process described herein shall be conducted and administered in accordance with the FRCC Bylaws and such other FRCC governing documents as may be relevant to the proceedings. These dispute resolution procedures outline a step-by-step process for the resolution of disputes. Parties are permitted to skip steps in the dispute resolution process by mutual agreement, or as specified in the procedures for each step.

Section 4 Resolution Steps.

The four steps in the dispute resolution process are:

(a) Step 1—Settlement Proceeding: (i) Step 1 is a proceeding in which the parties shall meet in a good faith effort to resolve the dispute by mutual agreement ("Settlement Proceeding"). FRCC shall provide administrative support, such as making available meeting space, as requested by the parties. The parties shall be represented at settlement discussions by a person with full authority to resolve the dispute. A final resolution may be subject to corporate or regulatory or other government approvals, the requirements for which shall be disclosed by any party subject to an approval prior to agreement on a final resolution.

(ii) In the event that the parties cannot resolve their dispute in ninety (90) days from the submission of the dispute resolution request, or such later date as may be agreed to by the parties, the dispute shall proceed to the next step in the dispute resolution process. At any time after thirty (30) days from the submission of the dispute resolution request the parties may mutually agree to end the process. Any statement relating to the dispute by any party during the course of or relating to the Settlement Proceeding may not be cited or offered into evidence for any purpose in any external proceeding by any party.

(b) Step 2—Mediation Proceeding: (i) Step 2 is a proceeding to assist the parties through active participation by a mediator in joint discussions and negotiations through which the parties attempt to resolve the dispute by mutual agreement ("Mediation Proceeding"). The Mediation Proceeding shall be conducted by an independent mediator selected and mutually agreed upon by the parties ("Mediator"). A Mediator shall have no affiliation with, financial or other interest in, or prior employment with any party or any of their parents, subsidiaries or affiliates, and shall have knowledge and experience relevant to the subject matter of the dispute. In the event that the parties cannot agree on a Mediator within 10 days following the termination of the Settlement Proceeding, the President of FRCC shall select a Mediator; provided, however, that if FRCC is a party the Mediator shall be selected by the FRCC Chair, unless the FRCC Chair is an officer or employee of a party, in which case the selection shall be made by the FRCC Vice Chair. At the request of the Mediator, the parties shall be represented at a mediation session by a person with full authority to resolve the dispute. A final resolution may be subject to corporate or regulatory or other government approvals, the requirements for which shall be disclosed by any party subject to an approval prior to agreement on a final resolution.

(ii) The Mediator shall not issue specific recommendations on resolution of the dispute or otherwise opine on the merits of the dispute except at the request of the parties. A party may request the Mediator to offer his or her views on the merits or any other aspect of the dispute to that party individually on a confidential basis. Any recommendation, opinion or other statement expressed by the Mediator or any party relating to the dispute during the course of or relating to the Mediation Proceeding shall be offered solely for purposes of resolution of the Mediation Proceeding, and may not be cited or offered into evidence for any purpose in any external proceeding by any party.

(iii) In the event that the parties cannot resolve their dispute in ninety (90) days from the selection of the Mediator, or such later date as may be agreed to by the parties with the concurrence of the Mediator, the dispute shall then proceed to the next step in the dispute resolution process. At any time after sixty (60) days from selection of the Mediator, the parties may mutually agree to end the process, or a party may request the Mediator to determine and declare that the Mediation Proceeding is at an impasse. If the Mediator determines that the Mediation Proceeding is not likely to result in a resolution of the dispute, the Mediator shall declare the Mediation Proceeding at an impasse, and if so the dispute shall proceed to the next step in the dispute resolution process.

(c) Step 3—Arbitration Proceeding: (i) Step 3 is a non-binding arbitration in which an arbitrator or an arbitration panel shall receive evidence from each disputing party on factual matters, and hear arguments, relating to the issues in dispute, make written findings and conclusions of fact and law, and issue specific recommendations, based on those findings and

conclusions, for resolution of each issue in dispute ("Arbitration Proceeding"). Initiation of an Arbitration Proceeding shall require the mutual agreement of the parties. The Arbitration Proceeding shall be conducted before a single arbitrator selected by the parties. Alternatively, the parties may agree to have the Arbitration Proceeding conducted by a panel of three arbitrators, with one designated by the Invoking Party or Parties, one designated by the Noticed Party or Parties, and a third selected by the two arbitrators designated by the parties. The parties may by mutual agreement engage a firm specializing in alternative dispute resolution to administer the Arbitration Proceeding, or may invoke the assistance of the Federal Energy

Regulatory Commission's Dispute Resolution Service. Arbitrators shall have no affiliation with, financial or other interest in, or prior employment with any party or any of their parents, subsidiaries or affiliates, and shall have knowledge and experience relevant to the subject matter of the dispute. The parties shall have 10 business days after conclusion of or agreement to skip the Mediation Proceeding to select a single arbitrator, or to agree on the use of an arbitration panel and to make their respective arbitrator designations and to so notify the opposing party or parties, with the arbitrators so designated selecting the third arbitrator not later than five days after the last such designation. If the parties cannot agree on the selection of a single arbitrator, unless the parties agree otherwise the President of FRCC shall provide the parties with a list of not less than five candidates meeting the qualifications set forth above. The list shall summarize the qualifications of the candidates, by experience and education, to resolve the matters at issue. The parties shall convene a meeting or telephone conference call during which the parties shall alternate striking names from the list until a single name remains, the party with the first strike to be chosen by lot. If any person so selected is or becomes unwilling or unable to serve, the last

person struck from the list shall be requested to serve. Subsequent procedures shall be determined by the arbitrator or arbitration panel, upon consideration of the recommendations of the parties, who shall seek to agree on a location for the arbitration and other procedures.

(ii) The arbitrator or arbitration panel shall issue findings of fact and law and recommendations for resolution of the dispute within ninety (90) days of appointment, unless a longer period shall be agreed to by the parties with the concurrence of the arbitrator or arbitration panel.

(d) Step 4—Board Proceeding: (i) Step 4 is a proceeding conducted by the FRCC Board (Board Proceeding) to hear formal evidence on factual matters related to the issues submitted, make written findings of fact and conclusions of law, and issue a recommended award or other resolution for each issue in dispute; provided, however, that if the parties have completed an Arbitration Proceeding as specified in Step 3, the Board shall accept the arbitrator's findings of fact except to the extent that a party demonstrates to the satisfaction of the Board that one or more findings of fact are erroneous. A party shall have 30 days from the completion of the Arbitration Proceeding to make a submission to the Board, with copies to all parties, contending that any of the findings of fact by the Arbitrator are erroneous, and any other party shall have 15 days from its receipt of the submission to respond to any such submission. Other procedures and schedules for the Board Proceeding shall be established by the FRCC Board.

(ii) The FRCC Board shall vote on the appropriate resolution of the dispute in accordance with the voting procedures described in the FRCC Bylaws. The FRCC Board shall

publish the results of the vote and issue recommendations for resolution of the issues in dispute within ninety (90) days of initiation of the Board Proceeding, or such longer period as may be agreed to by the parties, with the concurrence of the FRCC Board.

(e) Further Proceedings. After 30 days from completion of the dispute resolution steps described above, to the extent that the parties have not agreed to resolution of any issue in dispute a party may seek resolution of the dispute through one of the following proceedings:

(i) By agreement of the parties, binding arbitration.

(ii) A regulatory proceeding before a state or federal regulatory agency having jurisdiction of all parties and the subject matter of the dispute.

(iii) A judicial proceeding before a court of competent jurisdiction.

Nothing in this Section 4(e) shall limit the right of a party to file a complaint, at any time, with the Federal Energy Regulatory Commission pursuant to Section 206 of the Federal Power Act.

Section 5 Administration.

The following administrative procedures apply to the dispute resolution procedures described in Section 4(a)-(d):

At each step in the process, unless the parties otherwise agree the neutral person or persons conducting the dispute resolution process shall determine meeting arrangements and formats necessary to efficiently expedite the resolution of the dispute, and shall notify the parties of these details. The parties shall seek to agree on such matters, but if after endeavoring in good faith they are unable to agree, or if they request it, the neutral authority for the proceeding shall make decisions regarding such details. The President of FRCC shall assign a member of the FRCC staff to assist those responsible for conducting the dispute resolution with the administration of the process. If the parties resolve their dispute in a proceeding prior to the Board Proceeding, the person or persons responsible for conducting the dispute resolution process shall notify the President of FRCC and the FRCC Chair of its outcome. After consultation with the parties and the individuals responsible for conducting the dispute resolution process to confirm the completion of the process described in that step, the President of FRCC, with the concurrence of the FRCC Chair if the FRCC initiated the dispute, shall discharge the persons responsible for conducting the dispute resolution process, and notify the FRCC Board of the results.

Section 6 Expenses.

The parties to the dispute shall share equally all costs for meeting locations, administrative costs, and travel and related expenses of FRCC staff members, Mediators or arbitrators administering or conducting the dispute resolution process. The parties to the dispute shall also share equally all charges for time and expenses of a Mediator, an arbitrator or an arbitration panel. The FRCC Controller shall, with the assistance of the FRCC staff members

assigned to assist in the administration of the proceedings, account for these expenses. Each party to the dispute shall be responsible for its own costs and fees, including attorney fees, associated with participation in any of the proceedings described herein.

Appendix 6 to Attachment N-2

Examples of Cost Recovery Provisions

Example 1: per 9.4.5.A(1)

- CEERTS project where Companies A & B are incumbent enrolled transmission providers and each receive benefits from the project
- Company A is the project developer
- Company B makes a FERC-approved CIAC payment to Company A for its allocated cost and records an intangible asset in its rate base to be amortized
- Company A records CIAC as a reduction to transmission plant in service

Assumptions:	Ownership %	Initial Capital	Ongoing O&M Expense	Capital Replacements
Total CEERTS Project Cost:		$400 million	$150 million	$100 million
Company A Cost Responsibility	60%	$240 million	$90 million	$60 million
Company B Cost Responsibility	40%	$160 million	$60 million	$40 million
CIAC is not Grossed-Up for Income Taxes				

$ in Millions

Company A	Taxes Payable		Cash		Transmission Net Plant (FERC 350-359)		Depreciation Expense (FERC 403)		O & M Expense (FERC 566, 573)	
Record Initial Project cost Spending				$ 400	$ 400					
Record Receipt of CIAC		$ 160				$ 160				
Record Annual Depreciation (30 yr life)						$ 8	$ 8			
Record On-going O&M Expense ($5M Annually)				$ 150					$ 150	
Record Receipt of O&M (40%)		$ 60								$ 60
Record Replacement Capital Expenditures				$ 100	$ 100					
Record receipt of Replacement Capital Expenditures as CIAC		$ 40				$ 40				
Record Annual Depreciation on Replacement Capital (30 yr life)						$ 2	$ 2			

Company B	Cash		Intangible Net Plant (FERC 303)		Amortization Expense (FERC 404)		O & M Expense (FERC 566, 573)	
Record Initial Payment of CIAC		$ 160	$ 160					
Record Annual Amortization (30 yr life)				$ 5	$ 5			
Record On-going O&M Expense ($5M Annually x 40%)		$ 60					$ 60	
Record Replacement Capital Expenditures		$ 40	$ 40					
Record Annual Amortization on Replacement Capital (30 yr life)				$ 1	$ 1			

Appendix 6 to Attachment N-2

Examples of Cost Recovery Provisions

Page 2 of 3

Example 2: per 9.4.5.A(2)

- CEERTS project where Companies A & B are incumbent enrolled transmission providers and each receive benefits from the project
- Company A is the project developer and funds the entire project
- Company A files with FERC to recover its transmission revenue requirement from Company B over 30 years
- Company A reduces its transmission revenue requirements
- Company B increases its transmission revenue requirements
- Assume capital replacements are $90 million over the 30-year period
- Assume operating and maintenance expense (O&M) is $150 million over the 30-year period
- Assume total pretax return on rate base to Company A of $350 million (pretax ROR of 12%)
- Total revenue requirement due to Company A is capital, O&M, and return on capital

Assumptions:	Ownership %	Initial Capital	Ongoing O&M Expense	Capital Replacements	Return on Rate Base to Co A	
Total CEERTS Project Cost:		$400 million	$150 million	$90 million		
Company A Cost Responsibility	60%	$240 million	$90 million	$54 million		
Company B Cost Responsibility	40%	$160 million	$60 million	$36 million	$350 million	$606 due to A

$ in Millions **Company A**	Cash		Transmission Net Plant (FERC 350-359)		Depreciation Expense (FERC 403)		O & M Expense (FERC 566, 573)		Revenue (FERC 456)	
Record Project Cost Spending		$ 400	$ 400							
Record Annual Depreciation (30 yr life)				$ 13	$ 13					
Record On-going O&M Expense		$ 150					$ 150			
Record Replacement capital expenditures		$ 90	$ 90							
Record Annual Depreciation on Replacement Capital (30 yr life)				$ 3	$ 3					
Record Total Revenue Requirements from Company B	$ 606									$ 606

Company B	Cash		O & M Expense (FERC 566, 573)	
Record On-going Payment to Company A (over 30 yrs)		$ 606	$ 606	

Appendix 6 to Attachment N-2

Examples of Cost Recovery Provisions

Page 3 of 3

Example 3: per 9.4.5.B

- CEERTS project where Companies A & B each receive benefits from the project
- Company C is a non-incumbent and the project developer and funds the entire project
- Company C files with FERC to recover its transmission revenue requirement from Company A & B over 20 years
- Company A & B increase their transmission revenue requirements
- Assume capital replacements are $90 million over the 30 year-period
- Assume operating and maintenance expense (O&M) is $150 million over the 30-year period
- Assume total pretax return on rate base to Company C of $900 million (pretax ROR of 12%)
- Total revenue requirement due to Company C is capital, O&M, and return on capital

Assumptions:	Ownership %	Initial Capital	Ongoing O&M Expense	Capital Replacements	Return on Rate Base to Co A	
Total CEERTS project cost:		$400 million	$150 million	$90 million	$900 million	
Company A cost responsibility	50%	$200 million	$75 million	$45 million	$450 million	$770 due to C
Company B cost responsibility	50%	$200 million	$75 million	$45 million	$450 million	$770 due to C

$ in Millions

Company C	Cash		Transmission Net Plant (FERC 350-359)		Depreciation Expense FERC 403		O & M Expense (FERC 566, 573)		Revenue (FERC 456)
Record Project Cost Spending		$ 400	$ 400						
Record Annual Depreciation (30 yr life)				13	$ 13				
Record On-going O&M Expense		$ 150					$ 150		
Record Replacement Capital Expenditures		$ 90	$ 90						
Record Annual Depreciation on Replacement Capital (30 yr life)				$ 3	$ 3				
Record Total Revenue Requirements from Company A & B	$ 1,540								$1,540

Company A	Cash		O & M Expense (FERC 566, 573)	
Record on-going payment to Company C (over 30 yrs)		$ 770	$ 770	

Company B	Cash		O & M Expense (FERC 566, 573)	
Record on-going payment to Company C (over 30 yrs)		$ 770	$ 770	

ATTACHMENT N-2 - SERTP

Interregional Transmission Coordination Between the FRCC and SERTP Regions

The Transmission Provider, through its FRCC regional transmission planning process, coordinates with the public utility transmission providers in the Southeastern Regional Transmission Planning process region ("SERTP") to address transmission planning coordination issues related to interregional transmission facilities. The interregional transmission coordination procedures include a detailed description of the process for coordination between the FRCC and the public utility transmission providers in the SERTP (i) with respect to an interregional transmission facility that is proposed to be located in both transmission planning regions and (ii) to identify possible interregional transmission facilities that could address transmission needs more efficiently or cost-effectively than transmission facilities included in the respective regional transmission plans. The interregional transmission coordination procedures are hereby provided in this Attachment N-2 - SERTP with additional materials provided on the regional planning websites.

The Transmission Provider ensures that the following requirements are included in the interregional transmission coordination procedures:

(1) A commitment to coordinate and share the results of the FRCC and SERTP regional transmission plans to identify possible interregional transmission projects that could address transmission needs more efficiently or cost-effectively than separate regional transmission facilities, as well as a procedure for doing so;

(2) A formal procedure to identify and jointly evaluate transmission facilities that are proposed to be located in both transmission planning regions;

(3) A duty to exchange, at least annually, planning data and information; and

(4) A commitment to maintain a website or e-mail list for the communication of information related to the coordinated planning process.

The Transmission Provider and other transmission providers in the FRCC have worked with transmission providers located in the SERTP to develop a mutually agreeable method for allocating between the two transmission planning regions the costs of new interregional transmission facilities that are located within both transmission planning regions. Such cost allocation method satisfies the six interregional cost allocation principles set forth in Order No. 1000 and is included in this Attachment N-2 - SERTP.

For purposes of this Attachment N-2 - SERTP, the FRCC's regional transmission planning process is the process described in Attachment N of this Tariff; the SERTP regional transmission planning process is the process described in the relevant Attachment Ks (or analog tariff sections) of the public utility transmission providers in the SERTP. References to the respective regional transmission planning processes in this Attachment N-2 - SERTP are intended to identify the activities described in those tariff provisions. Unless noted otherwise, Section references in this Attachment N-2 - SERTP refer to Sections within this Attachment N-2 - SERTP.

INTERREGIONAL TRANSMISSION PLANNING PRINCIPLES

Representatives of the FRCC and the SERTP will meet no less than once per year to facilitate the interregional coordination procedures described below (as applicable). Representatives of the FRCC and the SERTP may meet more frequently during the evaluation of project(s) proposed for purposes of interregional cost allocation between the FRCC and the SERTP.

1. Coordination

1.1 Review of Respective Regional Plans: Biennially, the FRCC and the public utility transmission providers in the SERTP region shall review each other's current regional plan(s) and engage in the data exchange and joint evaluation described in Sections 2 and 3.

1.2 Review of Proposed Interregional Projects: The FRCC and the public utility transmission providers in the SERTP will coordinate with regard to the evaluation of interregional transmission projects identified by the FRCC and the public utility transmission providers in the SERTP as well as interregional transmission projects proposed for Interregional Cost Allocation Purposes ("Interregional CAP"), pursuant to Sections 3 and 4, below. Initial coordination activities regarding new interregional proposals will typically begin during the third calendar quarter. The FRCC and the public utility transmission providers in the SERTP will typically exchange status updates for new interregional transmission project proposals or proposals currently under consideration every six (6) months, or as needed. These status updates will generally include, if applicable: (i) an update of the region's evaluation of the proposal; (ii) the latest calculation of Regional Benefits (as defined in Section 4.2); (iii) the anticipated timeline for future assessments; and (iv) reevaluations related to the proposal.

1.3 Coordination of Assumptions Used in Joint Evaluation: The FRCC and the public utility transmission providers in the SERTP will coordinate assumptions used in joint evaluations, as necessary, which includes items such as:

- Expected timelines/milestones associated with the joint evaluation;

- Study assumptions; and
- Regional benefit calculations.

2. Data Exchange

2.1 At least annually, the FRCC and the public utility transmission providers in the SERTP shall exchange power-flow models and associated data used in the regional transmission planning processes to develop their respective then-current regional transmission plan(s). This exchange will typically occur by the beginning of each region's transmission planning cycle. Additional transmission-based models and data may be exchanged between the FRCC and the public utility transmission providers in the SERTP as necessary and if requested. For purposes of the interregional coordination activities outlined in this Attachment N-2 - SERTP, only data and models used in the development of the FRCC's and SERTP's then-current regional transmission plans and used in their respective regional transmission planning processes will be exchanged. This data will be posted on the pertinent regional transmission planning process' website, consistent with the posting requirements of the respective regional transmission planning processes, and is considered CEII. The FRCC shall notify the public utility transmission providers in the SERTP of such posting.

2.2 The FRCC regional transmission plans will be posted on the FRCC website pursuant to the FRCC's regional transmission planning process. The FRCC will also notify the public utility transmission providers in the SERTP of such posting so the public utility transmission providers in the SERTP may retrieve these transmission plans. The public utility transmission providers in the SERTP will

exchange their then-current SERTP regional plan(s) in a similar manner according to their regional transmission planning process.

3. Joint Evaluation

3.1 Identification of Interregional Projects: The FRCC and the public utility transmission providers in the SERTP shall exchange planning models and data and current regional transmission plans as described in Section 2. The FRCC and the public utility transmission providers in the SERTP will review one another's then-current regional plan(s) in accordance with the coordination procedures described in Section 1 and their respective regional transmission planning processes. If through this review, the FRCC or the public utility transmission providers in the SERTP identify a potential interregional project that could be more efficient or cost effective than projects included in the respective regional plans, the FRCC and the public utility transmission providers in the SERTP will jointly evaluate the potential project pursuant to Section 3.4.

3.2 Identification of Interregional Projects by Stakeholders: Stakeholders may also propose projects that may be more efficient or cost-effective than projects included in the FRCC's and the SERTP's regional transmission plans pursuant to the procedures in each region's regional transmission planning processes. The FRCC and the public utility transmission providers in the SERTP will evaluate interregional projects proposed by stakeholders pursuant to Section 3.4.

3.3 Identification of Interregional Projects by Developers: Interregional transmission projects proposed for potential Interregional CAP must be submitted in both the SERTP and FRCC regional transmission planning processes. The

project submittal must satisfy the requirements of Section 4.1. The submittal must identify the potential transmission project as interregional in scope and identify the FRCC and SERTP as regions in which the project is proposed to interconnect. The FRCC will verify whether the submittal for the potential interregional transmission project satisfies all applicable requirements. Upon finding that the proposed interregional transmission project satisfies all such applicable requirements, the FRCC will notify the public utility transmission providers in the SERTP. Once the potential project has been proposed through the regional transmission planning processes in both regions, and upon both regions so notifying one another that the project is eligible for consideration pursuant to their respective regional transmission planning processes, the FRCC and the public utility transmission providers in the SERTP will jointly evaluate the proposed interregional projects pursuant to Sections 3 and 4.

3.4 Evaluation of Interregional Projects: The FRCC and the public utility transmission providers in the SERTP shall act through their respective regional transmission planning processes to evaluate potential interregional transmission projects and to determine whether the inclusion of any potential interregional transmission projects in each region's regional transmission plan would be more efficient or cost-effective than projects included in their respective then-current regional transmission plans. Such analysis shall be consistent with accepted planning practices of the respective regions and the transmission study methodologies utilized to produce each region's respective regional transmission plan(s). The FRCC will evaluate potential interregional transmission projects

consistent with Section 1 of Attachment N-2. To the extent possible and as needed, assumptions and models will be coordinated between the FRCC and the public utility transmission providers in the SERTP as described in Section 1. Data shall be exchanged to facilitate this evaluation using the procedures described in Section 2.

3.5 Initial Evaluation of Interregional Projects Proposed for Interregional Cost Allocation Purposes: If an interregional project is proposed in the FRCC and the SERTP for Interregional CAP, the initial evaluation of the project will typically begin during the third calendar quarter, with analysis conducted in the same manner as analysis of interregional projects identified pursuant to Sections 3.1 and 3.2. Projects proposed for Interregional CAP shall also be subject to the requirements of Section 4.

4. Cost Allocation: If an interregional project is proposed for Interregional CAP in the FRCC and the SERTP, then the following methodology applies:

4.1 Interregional Projects Proposed for Interregional Cost Allocation Purposes: For a transmission project to be considered for Interregional CAP within the FRCC and the SERTP, the following criteria must be met:

A. The transmission project must be interregional in nature;

- Be located in both the FRCC and the SERTP regions;
- Interconnect to transmission facilities in both the FRCC and SERTP regions. The facilities to which the project is proposed to interconnect may be either existing transmission facilities or

transmission projects included in the regional transmission plan that are currently under development; and

- Meet the threshold criteria for transmission projects potentially eligible to be included in the regional transmission plans for purposes of cost allocation in both the FRCC and the SERTP, pursuant to their respective regional transmission planning processes.

B. On a case-by-case basis, the FRCC and the SERTP will consider a transmission project that does not satisfy all of the criteria specified in Section 4.1.A but: (i) meets the threshold criteria for a project proposed to be included in the regional transmission plan for purposes of cost allocation in at least one of the two regions; (ii) would be located in both regions; and (iii) would be interconnected to transmission facilities in both the FRCC and SERTP regions. The facilities to which the project is proposed to interconnect may be either existing transmission facilities or transmission projects included in the regional transmission plan that are currently under development.

C. The transmission project must be proposed for purposes of cost allocation in both the FRCC and the SERTP.

- Except for the case-by-case exception for project threshold criteria identified in Section 4.1.B, the transmission developer and project submittal must satisfy all criteria specified in the respective regional transmission processes.

- The proposal should be submitted in the timeframes outlined in the respective regional transmission planning processes.

4.2 Evaluation of Interregional Projects Proposed for Interregional Cost Allocation Purposes: Interregional projects proposed for Interregional CAP in the FRCC and the SERTP shall be evaluated within the respective regions as follows:

A. Each region, acting through its regional transmission planning process, will evaluate proposals to determine whether the proposed project(s) addresses transmission needs that are currently being addressed with projects in its regional transmission plan and, if so, which projects in the regional transmission plan could be displaced by the proposed project(s).

B. Based upon its evaluation, each region will quantify a Regional Benefit based upon the transmission costs that each region is projected to avoid due to its transmission project(s) being displaced by the proposal.

- For purposes of this Attachment N-2 - SERTP, "Regional Benefit" means the total avoided costs of projects included in the then-current regional transmission plans that would be displaced if the proposed interregional transmission project was included. The Regional Benefit is not necessarily the same as the benefits used for purposes of *regional* cost allocation.

4.3. Calculation of Benefit to Cost Ratio: Each region will calculate a regional benefit to cost ("BTC") ratio consistent with its regional process and compare the BTC ratio to its respective threshold to determine if the interregional project

appears to be more efficient or cost effective than those projects included in its current regional transmission plan. Each region shall utilize the cost calculation(s) as defined in such region's regional transmission planning process (*e.g.*, the FRCC will compute the cost of the portion of the interregional project that resides within the FRCC region in accordance with their regional process and the SERTP will do the same). The regions shall also coordinate such cost calculation assumptions in accordance with Section 1.3. The anticipated percentage allocation of costs of the interregional project to each region shall be based upon the ratio of the region's Regional Benefit to the sum of the Regional Benefits identified for both the FRCC and the SERTP. The Regional Benefits shall be determined pursuant to the methodology described in Section 4.2. Regional BTC assessments shall be performed in accordance with each region's regional transmission planning process, including but not limited to subsequent calculations and reevaluations.

4.4 Inclusion in Regional Transmission Plans: An interregional project proposed for Interregional CAP in the FRCC and the SERTP will be included in the respective regional transmission plans for purposes of cost allocation after:

A. Each region has performed all evaluations, as prescribed in its regional transmission planning process, necessary for a project to be included in its regional transmission plan for purposes of cost allocation;

- This includes any regional BTC ratio calculations performed pursuant to Section 4.3; and

B. Each region has obtained all approvals, as prescribed in its regional process, necessary for a project to be included in the regional transmission plan for purposes of cost allocation.

4.5 Allocation of Costs Between the FRCC and the SERTP: The cost of an interregional project, selected for purposes of cost allocation in the regional transmission plans of both the FRCC and the SERTP, will be allocated as follows:

A. Each region will be allocated a portion of the interregional project's costs in proportion to such region's Regional Benefit to the sum of the Regional Benefits identified for both the FRCC and the SERTP.

- The Regional Benefits used for this determination shall be based upon the last Regional Benefit calculation performed – pursuant to the method described in Section 4.2. – before each region included the project in its regional transmission plan for purposes of cost allocation and as approved by each region.

B. Costs allocated to each region shall be further allocated within each region pursuant to the cost allocation methodology contained in its regional transmission planning process.

C. Should one region be willing to bear more costs of the interregional transmission project than those costs identified pursuant to the methodology described in Section 4.5.A, the regions may voluntarily agree, subject to applicable regional approvals, to an alternative cost sharing arrangement.

4.6 Removal from Regional Plans: An interregional project may be removed from the FRCC's or the SERTP's regional transmission plan for purposes of cost allocation: (i) if the developer fails to meet developmental milestones; (ii) pursuant to the reevaluation procedures specified in the respective regional transmission planning processes; or (iii) if the project is removed from one of the region's regional transmission plans pursuant to the requirements of its regional transmission planning process.

A. The FRCC shall notify the public utility transmission providers in the SERTP if an interregional project or a portion thereof is likely to be removed from its regional transmission plan.

5. Transparency

A. The FRCC shall post procedures for coordination and joint evaluation on the FRCC website.

B. Access to the data utilized will be made available through the FRCC website subject to the appropriate clearance, as applicable (such as CEII and confidential non-CEII). The FRCC shall make available on the FRCC website links to where stakeholders can register (if applicable/available) for the stakeholder committee(s) or distribution list(s) of the SERTP.

C. The FRCC will provide status updates of the interregional transmission planning activities during their regional transmission planning meetings. These status updates will occur at all FRCC Board meetings and at the FRCC Planning Committee meetings. The FRCC will provide status updates of interregional activities including:

- Facilities to be evaluated;
- Analysis performed; and
- Determinations/results.

D. Stakeholders will have an opportunity to provide input and feedback within the respective regional transmission planning processes of the FRCC and the SERTP related to interregional facilities identified, analysis performed, and any determination/results. Stakeholders may participate in either or both regions' regional transmission planning processes to provide their input and feedback regarding the interregional coordination between the FRCC and the SERTP.

E. The FRCC will post, on the FRCC website, a list of all interregional transmission projects that are proposed for potential selection in a regional transmission plan for purposes of cost allocation in both the FRCC and the SERTP that are found not to be eligible for consideration because they do not satisfy the regional project threshold criteria of one or both of the regions. The FRCC will also post an explanation of the relevant thresholds the proposed interregional project(s) failed to satisfy.

ATTACHMENT N-3

Transmission Providers Enrolled in the SERTP

Subject to the provisions of Section 22 of this Attachment N-1, the following transmission providers and transmission owners are enrolled in the SERTP as of the effective date of this tariff record:

- Associated Electric Cooperative, Inc.
- Dalton Utilities
- Duke Energy Carolinas, LLC and Duke Energy Progress, Inc.
- Kentucky Utilities Company and Louisville Gas and Electric Company
- The Municipal Electric Authority of Georgia
- PowerSouth Energy Cooperative
- Southern Company Services, Inc., as agent for Alabama Power Company, Georgia Power Company and Mississippi Power Company
- The Tennessee Valley Authority

ATTACHMENT O

CREDITWORTHINESS PROCEDURES

1. DEP Zone and DEF Zone

1.1 Credit Review:

For the purpose of determining the ability of the Transmission Customer to meet its obligations related to service hereunder, the Transmission Provider may require reasonable credit review procedures. The credit review procedures shall consist of an evaluation of the Transmission Customer's ability to meet the creditworthiness criteria set out in Section 1.2. A credit review shall be conducted for each Transmission Customer not less than annually, or upon reasonable request by the Transmission Customer.

1.2 Creditworthiness:

A Transmission Customer that meets the following requirements shall not be required to provide any form of security against the risk of nonpayment for any type of service, including deposits that otherwise would be required pursuant to Sections 17.3, 29.2 and 37.4:

(i) The Transmission Customer is not in default of its payment obligations under Section 7.3 of this Tariff; and

(ii) It meets one of the following criteria:

a. The Transmission Customer has been in business at least one year and has a credit rating of at least Baa2 (Moody's) or BBB (Standard & Poors); or

b. The Transmission Customer has been in business at least one year, and provides its most recent financial statement to the Transmission Provider which demonstrates that the Transmission Customer meets standards that are at least equivalent to the standards underlying credit ratings of Baa2

(Moody's) or BBB (Standard and Poors), provided that if the Transmission Customer is found to be not creditworthy pursuant to this paragraph b, the Transmission Provider will inform the Transmission Customer of the reasons for that determination; or

c. The Transmission Customer is a borrower from the Rural Utilities Service ("RUS") and has a Times Interest Earned Ratio of 1.05 or better and a Debt Service Coverage Ratio of 1.00 or better in the most recent calendar year, or is maintaining the Times Interest Earned Ratio and Debt Service Coverage Ratio as established in the Transmission Customer's RUS Mortgage; or

d. The Transmission Customer is a municipality or a rural electric cooperative that has taken transmission service from the Transmission Provider for at least one year; or

e. The Transmission Customer's parent company meets the criteria set out in (i) and (ii)(a), (b), (c) or (d)) above, and the parent company provides a written guarantee that the parent company will be unconditionally responsible for all financial obligations associated with the Transmission Customer's receipt of transmission service.

1.3 <u>Requirements for Non-Creditworthy Customers</u>:

A Transmission Customer that does not meet the creditworthiness criteria set out in Section 1.2 above shall comply with one of the following:

(i) Not less than five days prior to the commencement of service, the Transmission Customer shall provide an unconditional and irrevocable letter of credit or an

alternative form of security proposed by the Transmission Customer and acceptable to the Transmission Provider and consistent with commercial practices established by the Uniform Commercial Code that is equal to the lesser of the total charge for service or the charge for 90 days of service; or

(ii) For service for one month or less, the Transmission Customer shall pay the total charge for service by the later of five business days prior to the commencement of service or the time when it makes the request for transmission service; or

(iii) for service of greater than one month, the Transmission Customer shall pay for each month's service not less than five business days prior to the beginning of the month. For Network Integration Transmission Service customers, the advance payment for each month shall be based on a reasonable estimate by the Transmission Provider of the charge for that month.

The Transmission Provider shall pay interest on any prepayments made pursuant to this Section 1.3 at the rates established pursuant to 18 C.F.R. § 35.19a(a)(2)(iii). The deposits provided for in Sections 17.3, 29.2 and 37.4 shall not be required.

1.4 <u>Changes in Creditworthiness Status</u>:

If a Transmission Customer that originally meets the requirements of Section 1.2 subsequently fails to meet those requirements at any time after it requests transmission service but before the termination of that service, it shall within five business days of notification in writing by the Transmission Provider either prepay for the next 30 days of transmission service or provide an unconditional and irrevocable letter of credit or alternative form of security acceptable to the Transmission Provider in an amount equal to the charge for the next 30 days of transmission service; and within 30 days of such notification shall meet the requirements of

Section 1.3. The Transmission Customer has 5 days from the notification date to challenge the credit findings of the Transmission Provider.

1.5 <u>Suspension of Service</u>:

The Transmission Provider may suspend service to a Transmission Customer who does not meet the creditworthiness standards of Section 1.2 under the following circumstances;

(i) If the Transmission Customer qualifies for service pursuant to Section 1.3 as a result of providing a letter or credit or alternative form of security, it does not pay its bill within 20 days of receipt as required by Section 7.1, and it has not initiated a billing dispute in accord with Section 7.3, the Transmission Provider may suspend service 30 days after written notice to the Transmission Customer and the Commission that the service will be suspended unless the Transmission Customer pay its bills.

(ii) If the Transmission Customer qualifies for service as a result of committing to prepay for service pursuant to Section 1.3(ii) or Section 1.3(iii) above, and it fails to prepay for service as provided in such section, the Transmission Provider may suspend service immediately upon written notice to the Transmission Customer and the Commission.

(iii) If the Transmission Customer loses its creditworthy status as a result of circumstances other than a default of its payment obligations and it fails to meet the credit security requirements of Section 1.4, but it either pays its bills within the time period provided in Section 7.1 or initiates a billing dispute in accord with Section 7.3, the Transmission Provider may suspend service 30 days after written notice to the Transmission Customer and the Commission that the service will be

suspended unless the Transmission Customer meets the credit security requirements of Section 1.3.

(iv) If the Transmission Customer loses its creditworthy status because it is in default of its payment obligations under Section 7.3 and it fails to meet the requirements of Section 1.4, the Transmission Provider may suspend service five business days after written notice to the Transmission Customer and the Commission that service will be suspended if the Transmission Customer does not meet the requirements of Section 1.4.

The suspension of service shall continue only for as long as the circumstances that entitle the Transmission Provider to suspend service continue. A Transmission Customer is not obligated to pay for Transmission Service that is not provided as a result of a suspension of service.

2. DEC Zone

2.1 <u>Credit Review</u>:

A Transmission Credit Limit will be established for each Transmission Customer pursuant to Section 2.2. For the purpose of determining the creditworthiness of a Transmission Customer, the Transmission Provider will conduct a credit review to evaluate the Transmission Customer's ability to meet the creditworthiness standard set out in Section 2.3 of this document. A credit review will be conducted at the time that a new Transmission Customer submits a Completed Application or an existing Transmission Customer seeks to increase its established Transmission Credit Limit. In addition, the Transmission Provider may perform credit reviews on a periodic basis to ensure continuing compliance.

2.2 Transmission Credit Limit:

(i) A Transmission Credit Limit will be established for each Transmission Customer based on a reasonable estimate of the maximum amount of transmission service that the Transmission Customer expects it will use over any five consecutive month period during the duration of its Service Agreement.

(ii) A Transmission Customer may seek to establish a new Transmission Credit Limit based on changed circumstances regarding the estimated maximum amount of transmission service that the Transmission Customer expects it will use over any given five consecutive month period, as long as it meets the creditworthiness standard set forth in Section 2.3.

2.3 Creditworthiness Standard:

In order to be found creditworthy, the Transmission Customer must meet the following standard:

(i) The Transmission Customer is not in default of its payment obligations, if any, under Part I, Section 7.3 of the Tariff; and

(ii) The Transmission Customer meets one of the following four criteria:

a. The Transmission Customer has been in business at least one year and has a credit rating on senior unsecured debt of at least Baa3 (Moody's) or BBB- (Standard & Poors) where, if rated by both agencies, the lower of the two ratings controls (*see* Appendix A for credit rating scales); or

b. The Transmission Customer is a borrower from the Rural Utilities Service ("RUS") and demonstrates to the Transmission Provider that it is maintaining the times interest earned ratio and debt service coverage ratio as established in the Transmission Customer's RUS Mortgage (or if not specified in the Mortgage, has a times interest earned ratio of 1.10x or better and a debt service coverage ratio of 1.10x or better in the most recent calendar year); or

c. The Transmission Customer's parent company meets the criteria set out in (i) and (ii)(a) or (b) above, and the parent company provides a written

guarantee (in a form acceptable to the Transmission Provider), that the parent company will be unconditionally responsible for all financial obligations associated with the Transmission Customer's receipt of transmission service; or

d. The Transmission Customer:

1. Has been in business at least one year;

2. Provides reasonably current audited annual financial statements (and current quarterly financial statements if available) to the Transmission Provider; and

3 Demonstrates to the Transmission Provider's satisfaction that it meets standards that are at least equivalent to the standards underlying the credit ratings of Baa3 (Moody's) or BBB- (Standard and Poors) on senior unsecured debt. For purposes of making this determination, the Transmission Provider will provide the audited financial statements and other relevant information concerning the Transmission Customer to the Credit Risk Management group, which will assign the Customer an "Internal Risk Rating" as further described in Appendix A. Based on the overall information garnered by the Transmission Provider, including but not limited to the Internal Risk Rating and information provided by the Transmission Customer, the Transmission Provider will determine the creditworthiness of the Transmission Customer.

If a Transmission Customer is determined to not meet the creditworthiness standard, the Transmission Provider will inform the Transmission Customer of the reasons for that determination and the Transmission Customer may dispute this finding pursuant to Section 2.6.

2.4 Security Requirements:

A Transmission Customer that does not meet one of the creditworthiness standards set out in Section 2.3 above shall comply with one of the following:

(i) Not less than five days prior to the commencement of service, the Transmission Customer shall provide in a form acceptable to the Transmission Provider, an unconditional and irrevocable letter of credit issued by a financial institution rated at least A- by S&P (for senior unsecured debt) with greater than $10 billion in

assets or an alternative form of security that is equal to the lesser of the total charge for service or the charge for five months of service; or

(ii) For service of one month or less, the Transmission Customer shall pay the total charge for service by the later of five business days prior to the commencement of service or the time when it makes the request for transmission service; or

(iii) For service of greater than one month, the Transmission Customer shall pay for each month's service not less than five business days prior to the beginning of the month. For Network Integration Transmission Service customers, the advance payment for each month shall be based on a reasonable estimate by the Transmission Provider of the charge for that month.

2.5 <u>Changes in Creditworthiness Status</u>:

(i) If a Transmission Customer that originally meets the creditworthiness standard of Section 2.3 subsequently fails to meet those requirements at any time after it submits a Completed Application but before the termination of service, it shall within five business days of notification by the Transmission Provider either prepay for the next 30 days of transmission service or provide an unconditional and irrevocable letter of credit meeting the standards noted in 2.4(i) above or an alternative form of security acceptable to the Transmission Provider in an amount equal to the charge for the next 30 days of transmission service; and within 30 days of such notification shall meet the requirements of Section 2.4.

(ii) If requested by the Transmission Customer, the Transmission Provider, within three business days, must provide a written explanation detailing the justification for a change in the Transmission Customer's creditworthiness status.

2.6 **Procedures for Contesting Determination of Creditworthiness Status:**

Within 5 business days of receiving notice of the need for security, or if a finding is made that the Transmission Customer does not satisfy the creditworthiness standard of Section 2.3, a Transmission Customer may, in good faith, contest this determination by providing additional information addressing the Transmission Provider's concerns. If after reviewing the additional information submitted by the Transmission Customer, the Transmission Provider continues to require security and the Transmission Customer contests this determination, the Transmission Customer must provide the required security and the matter shall be referred to dispute resolution pursuant to Section 12 of the Tariff.

Appendix A

The following table shows the credit rating scales of the major rating agencies.

Credit Rating Scales*	**S&P**	**Moody's**
Investment Grade	AAA	Aaa
	AA+	Aa1
	AA	Aa2
	AA-	Aa3
	A+	A1
	A	A2
	A-	A3
	BBB+	Baa1
	BBB	Baa2
	BBB-	Baa3
Below Investment Grade	BB+	Ba1
	BB	Ba2
	BB-	Ba3
	etc	etc

* For purposes of establishing a Transmission Credit Limit, the rating referenced will be the rating for senior unsecured obligations (or the overall issuer rating if senior unsecured rating is not available), rather than that assigned to secured indebtedness. Debt ratings based on the acquisition by the issuer of insurance on the underlying debt shall not be considered as reflective of the creditworthiness of the issuer.

Internal Risk Ratings will be developed by the Duke Energy Corporation Credit Risk Management group based on an entity's audited financial statements and other available relevant information. Factors likely to have an impact on the Internal Risk Rating assigned to a customer include the following:

- Strength of balance sheet, as indicated by degree of financial leverage, interest coverage ratios, etc.;
- Strength of earnings and cash flow indicators;
- Market structure within which the entity operates, and its competitive positioning within that structure;
- Impact of regulation, including overall regulatory environment;
- Ability to establish and/or maintain adequate levels of customer rates;
- Overall size of entity relative to expected credit requirements;

- Adequacy of access to capital given capital expenditure requirements and/or other financing needs (including debt refunding);
- Volatility of earnings, cash flow, interest, and overall performance;
- Degree of exposure to adverse business, financial, or economic conditions;
- Susceptibility to business concentration risk; and
- Indications of potential bankruptcy, payment default, or other signs of financial distress.

ATTACHMENT P

METHODOLOGY FOR CLUSTERING TRANSMISSION STUDIES

1. DEP Zone and DEF Zone

Cluster Study Determination

The Transmission Provider may decide, either on its own initiative or in response to a request from an Eligible Customer, to perform a System Impact Study and/or a Facilities Study of multiple requests for transmission service in a single study to determine what transmission facilities are necessary to provide the requested service (a "Cluster Study") if the following criteria are met: (1) the Transmission Provider has received more than one request for Long-Term Firm Point-to-Point Transmission Service and/or Network Integration Transmission Service that will require a System Impact Study; (2) the requests are for overlapping time periods of service; and (3) the requested service will be limited by some of the same facilities. The Transmission Provider will not include in a Cluster Study any request for service as to which the Transmission Provider has already provided to the Eligible Customer the first draft of a System Impact Study with respect to that request. If the Transmission Provider determines that it will not perform a Cluster Study that has been requested by an Eligible Customer, it will post on the OASIS a brief statement explaining the reasons that it cannot accommodate an Eligible Customer's request.

Procedures for Clustered System Impact Studies and Facilities Studies

If the Transmission Provider decides to perform a Cluster Study, it will notify each affected Eligible Customer, provide a brief explanation of the reasons why it has decided to perform a Cluster Study, and tender a System Impact Study Agreement or a Facilities Study Agreement, as appropriate, that states that the Eligible Customer's request for service will be part of a Cluster

Study. The procedures of Sections 19 and 32 of the Tariff shall apply to Cluster Study Agreements and Cluster Studies, except that the 60-day periods for the completion of System Impact Studies and Facilities Studies established in Sections 19.3, 19.4, 32.3 and 32.4 shall be computed based on the last date on which an Eligible Customer whose request for service is studied in the Cluster Study must either execute and return a System Impact Study Agreement or a Facilities Study Agreement, as applicable.

The costs of the Cluster Study shall be shared equally among the Eligible Customers whose requests for service are included in the Cluster Study. If the Transmission Provider includes in a Cluster Study a request for service as to which it has already commenced a System Impact Study, the Eligible Customer must pay: (1) the Eligible Customer's share of the cost of the Cluster Study; and (2) if the Eligible Customer requested inclusion in the Cluster Study, the cost that the Transmission Provider has incurred with respect to the System Impact Study.

If an Eligible Customer whose request for service is studied in a Cluster System Impact Study does not execute a Facilities Study Agreement, execute a Service Agreement or request the filing of an unexecuted Service Agreement within the time established in Sections 19.3, 19.4, 32.3 or 32.4, as applicable; or an Eligible Customer whose request for service is studied in a Cluster Facilities Study does not execute a Service Agreement or request the filing of an unexecuted Service Agreement within the time established in Sections 19.4 or 32.4, as applicable, that Eligible Customer's Application shall be deemed terminated and withdrawn. In such event, the Transmission Provider shall re-study the requests for service for the remaining Eligible Customers in the Cluster Study. The remaining Eligible Customers shall bear equal shares of the costs of the re-study.

Transmission Service Cost Determination

The Transmission Provider will determine whether the facilities to be constructed are Network Upgrades or Direct Assignment Facilities based on the Commission policies. Transmission Customers shall be responsible for paying for transmission service based on the terms of Sections 27 and 34 of the Tariff.

Network Upgrades: Each Transmission Customer whose request for service has been studied in the Cluster Study and whose request for service contributes to the need for Network Upgrade(s) shall be deemed to be responsible for a pro rata share of the cost of those Network Upgrade(s) based on the amount of MW of service that it has requested. The Transmission Provider shall determine whether the Transmission Customer pays for transmission service at the embedded cost of service or at the incremental cost of the Network Upgrades based on the Commission's transmission pricing policies for Network Upgrades.

Direct Assignment Facilities: In the event a Direct Assignment Facility is identified and assigned to specific Transmission Customers whose requests for service are included in the Facilities Study, the cost of such Direct Assignment Facilities shall be borne by the specific Transmission Customers in accord with the Commission's transmission pricing policies for Direct Assignment Facilities.

2. DEC Zone

An Eligible Customer may request that the Transmission Provider cluster specific long-term transmission requests provided that the requests are in sequential order. Prior to submitting a cluster request to the Transmission Provider, the Eligible Customer must contact all of the Eligible Customers whose requests it proposes to be clustered and obtain their written consent that they are willing to have their request clustered with the other identified requests. The

Transmission Provider will determine whether to cluster the requests of the Eligible Customers that have provided consent to a proposed cluster. In determining whether to cluster, the Transmission Provider will offer clustering if the Transmission Provider determines that there are potential economic benefits in clustering because the potential transmission upgrades are large enough that the upgrades can accommodate more than one transmission service request, but the overall cost of upgrades may otherwise be prohibitive for only one or two customers. The Eligible Customers in the cluster will execute a single System Impact Study Agreement and will be given a single queue date (the date of the last Completed Application in the cluster). The cost of the System Impact Study will be shared equally among the Eligible Customers in the cluster.

If the Transmission Provider determines to cluster the identified requests, it will perform a single System Impact Study for the clustered requests. After the results of the System Impact Study have been provided, an Eligible Customer may opt out of the cluster prior to signing a Facilities Study Agreement and its Application will be deemed terminated and withdrawn. The Eligible Customer opting out must pay for any revised System Impact Study caused by its decision to opt out. If the System Impact Study determines that transmission system additions are required, the remaining clustered Eligible Customers will execute a single Facilities Study Agreement. The cost of the Facility Study will be shared equally among the Eligible Customers in the cluster. After the results of the Facilities Study have been provided, an Eligible Customer may opt out of the cluster prior to signing a Service Agreement and its Application will be deemed terminated and withdrawn. The Eligible Customer opting out must pay for any revised System Impact Study and revised Facilities Study caused by its decision to opt out after the Facilities Study is completed.

Those Transmission Customers that have not opted out must agree to compensate the Transmission Provider for any necessary transmission facility additions pursuant to the terms of Section 27 (Point-to-Point Customers) or Section 34 (Network Customers) of the Tariff. For purposes of compensation, all requests that are clustered are treated as simultaneous transmission service requests and cost responsibility allocated pro rata based on the amount of MW requested. Nothing in this Attachment impacts the "higher of" pricing policy applicable to service under the Tariff.

ATTACHMENT Q

Procedures For Changing The Real Power Loss Factor
[DEF Zone Only]

The Real Power Loss Factors applicable to delivery at transmission voltages and delivery at distribution voltages are set out in Sections 15.7, 28.5 and 36.11 of the Tariff. The Transmission Provider shall separately state the losses related to Generation Step-Up Transformers. The procedures for the modification of the Real Power Loss Factors are as follows:

1. Not later than March 15 of each year, the Transmission Provider shall provide existing Transmission Customers and intervenors in the most recent transmission rate proceeding the loss rate that the Transmission Provider proposes to place in effect beginning May 1 of that year, based on data for the prior calendar year, plus all data required to support and validate that proposed loss factor. The Transmission Provider shall respond to all reasonable requests from such Transmission Customers and intervenors for additional data.

2. Unless otherwise agreed, the Transmission Provider shall tender the previously provided loss factors for filing not later than April 30 of each year and shall request that the loss factors go into effect on May 1 of that year. All such filings shall be treated as Section 205 rate changes, regardless of whether the proposed loss factor is an increase, a decrease or is unchanged from the loss factor then in effect, and the Transmission Provider shall bear the burden of proof. The Transmission Customers and intervenors reserve all of their rights under Sections 205 and 206 of the Federal Power Act with regard to such annual filings,

including the right to request a five month suspension and a hearing on the proposed loss factors.

3. If, as a result of Commission action or settlement of any such proceeding, the loss factor is determined to be different from the loss factor proposed by the Transmission Provider, the Party that owes additional energy to the other as a result of the change in loss factor shall at its option treat such energy as inadvertent energy and return it in kind at times mutually agreed upon or make refunds, with interest, of the excess energy it absorbed at a rate calculated at the Transmission Provider's incremental cost of energy for the hours in which such energy was delivered. Refunds and energy returns to be made pursuant to this provision shall not be limited by the "last clean rate" doctrine or by the Commission's equitable authority to waive refunds.

ATTACHMENT R

RESERVED

ATTACHMENT S

RESERVED

ATTACHMENT T

POINT-TO-POINT TRANSMISSION SERVICE PRODUCTS OFFERED

Pursuant to the North American Electric Standards Board ("NAESB") Wholesale Electric Quadrant ("WEQ") OASIS Business Practice Standards ("WEQ-001"), the following "Fixed" and "Sliding" transmission services will be processed pursuant to the provisions of Part II of this Joint Open Access Transmission Tariff. All transmission service products are offered and processed in Eastern Prevailing Time (EPT) only.

	FIXED	**SLIDING**	**EXTENDED**	**NEXT INCREMENT**
Hourly NF	DEC DEP DEF	N/A	N/A	Not Offered
Daily NF	DEC DEP DEF	DEC DEP DEF	Not Offered	N/A
Daily Firm	DEC DEP DEF	DEC DEP DEF	Not Offered	N/A
Weekly NF	DEC DEP DEF	DEC DEP DEF	Not Offered	N/A
Weekly Firm	DEC DEP DEF	DEC DEP DEF	Not Offered	N/A
Monthly NF	DEC DEP DEF	DEC DEP DEF	Not Offered	N/A
Monthly Firm	DEC DEP DEF	DEC DEP DEF	Not Offered	N/A
Yearly NF	N/A	N/A	N/A	N/A
Yearly Firm	DEC DEP DEF	DEC DEP DEF	Not Offered	N/A

FIXED HOURLY
The service starts at the beginning of a clock hour and stops at the end of a clock hour.

FIXED DAILY
The service starts at 00:00 and stops at 24:00 of the same calendar date (same as 00:00 of the next consecutive calendar date).

FIXED WEEKLY
The service starts at 00:00 on Monday and stops at 24:00 of the following Sunday (same as 00:00 of the following Monday).

FIXED MONTHLY
The service starts at 00:00 on the first date of a calendar month and stops at 24:00 on the last date of the same calendar month (same as 00:00 of the first date of the next consecutive month).

FIXED YEARLY
The service starts at 00:00 on the first date of a calendar year and ends at 24:00 on the last date of the same calendar year (same as 00:00 of the first date of the next consecutive year).

SLIDING DAILY
The service starts at the beginning of either 23:00, 00:00 or 01:00 of a day and stops exactly 24 hours later at the same time on the next day.

SLIDING WEEKLY
The service starts at 00:00 of any date and stops exactly 168 hours later at 00:00 on the same day of the next week.

SLIDING MONTHLY
The service starts at 00:00 of any date and stops at 00:00 on the same date of the next month (28-31 days later). If there is no corresponding date in the following month, the service stops at 24:00 on the last day of the next month. For example: SLIDING MONTHLY starting at 00:00 on January 30 would stop at 24:00 on February 28 (same as 00:00 March 1).

SLIDING YEARLY
The service starts at 00:00 of the first day of a calendar month and stops at 00:00 on the same date of the following year.

EXTENDED DAILY
The service starts at any hour of a day and stops more than 24 hours later and less than 168 hours later.

EXTENDED WEEKLY
The service starts at 00:00 of any date and stops at 00:00 more than one week later, but less than four weeks later.

EXTENDED MONTHLY
The service starts at 00:00 of any date and stops at 00:00 more than one month later, but less than twelve months later.

EXTENDED YEARLY
The service starts at 00:00 of any date and stops at 00:00 more than one year later. The Transmission Provider may limit the service to be in increments of full years or full calendar months. The Transmission Provider may limit the start of service to the beginning of a calendar month.

NEXT INCREMENT HOURLY
The service starts at the beginning of the next clock hour and stops at the end of that clock hour.

ATTACHMENT U

DEF's RATE TREATMENT OF NEW TRANSMISSION RADIALS

a) Transmission radial facilities commencing service after May 31, 2010 ("new transmission radials"):

i. The costs of Transmission Provider's new transmission radials that serve its retail customers' loads and that are not considered part of the integrated grid under FERC guidelines and the cost of any upgrades to these new transmission radials will be excluded from the base rates for transmission services under the Transmission Provider's Formula Rate. OATT Attachment U.1 describes the changes to the Transmission Provider's Formula Rate to exclude the costs of these facilities. If some or all of the new transmission radial is later converted to an integrated transmission facility, the Transmission Provider's cost to integrate its previously non-integrated radial facility and the unrecovered cost of the previously non-integrated radial facility, or such portion that becomes integrated with the bulk transmission grid, would be recovered in Transmission Provider's Formula Rate.

ii. The costs of Transmission Provider's new transmission radials that serve Transmission Customer loads (including a wholesale customer load not served under the OATT) and that are not considered part of the integrated grid under FERC guidelines and the cost of any upgrades to these new transmission radials will be excluded from the base rates for transmission services under the Transmission Provider's Formula Rate. If and to the

extent that the Transmission Provider constructs and owns a new non-integrated transmission radial to serve a Transmission Customer loads, the Transmission Provider will assess the Transmission Customer with a total lump-sum payment to recover the capital costs of such facility, unless another payment method is mutually agreeable to the Transmission Provider and Transmission Customer, plus an O&M charge pursuant to an O&M agreement. If another payment method is mutually agreeable to the Transmission Provider and Transmission Customer, the Transmission Provider will make a Section 205 filing seeking to modify the Formula Rate as necessary to exclude the costs of the new transmission radial to serve such Transmission Customer loads. If and to the extent that the Transmission Customer constructs and owns a new transmission radial line to serve its customer load, the Transmission Customer may request, and the Transmission Provider may agree, that the Transmission Provider will operate and/or maintain the Transmission Customer's new transmission radial pursuant to an O&M agreement that fully and fairly compensates the Transmission Provider for the costs associated with such undertaking. If some or all of the new transmission radial is later converted to an integrated transmission facility, the Transmission Provider's cost to integrate its previously non-integrated radial facility and the unrecovered cost of the previously non-integrated radial facility that commenced service after May 31, 2010, would be included only in Transmission Provider's Formula Rate and will not be directly or

otherwise assigned to the Transmission Customer. In those situations where the Transmission Customer had made a lump sum payment which included the previously non-integrated radial facility, appropriate refunds would be made to the Transmission Customer related to the cost of the previously non-integrated radial facility, as set forth in OATT Attachment U.2. Nothing in this OATT Attachment U interferes with the Transmission Customer's absolute right to build and own a transmission radial to serve its own load.

OATT ATTACHMENT U.1

REVISED DEF OATT FORMULA RATE SHEETS
REFLECTING DEF's RATE TREATMENT OF TRANSMISSION RADIALS

DUKE ENERGY FLORIDA, INC.
OATT Transmission Non-Levelized Rate Formula Template Using Form-1 Data

Development of Rate Base and Capital Structure

Line	RATE BASE:	Reference	Beginning Balance	Ending Balance	B/E Average	Allocator		OATT Transmission
	Gross Plant in Service (Note A):							
1	Production Plant	205.46.b&g	0	0	0	N/A		
2	Transmission Plant (Note V)	207.58.b&g	0	0	0			
2A	Less Direct Assign Radials	DEF - 7, ll 1&5	0	0	0			
2B	Trans. Plant w/o Direct Assign Radials				0	TP	0.00000	0
3	Distribution Plant	207.75.b&g	0	0	0	N/A		
4	General Plant	207.99.b&g	0	0	0	OATT LABOR	0.00000	0
5	Intangible Plant	205.5.b&g	0	0	0	OATT LABOR	0.00000	0
6	**Total Gross Plant**				0	GP =	0.00000	0
	Accumulated Depreciation:							
7	Production Depr. Reserve	219.20 thru 24.c	0	0	0	N/A		
8	Transmission Depr. Reserve (Note V)	219.25.c	0	0	0			
8A	Less Direct Assign Radials	DEF - 7, ll 7&10	0	0	0			
8B	Trans. Reserve w/o Direct Assign Radials				0	TP	0.00000	0
9	Distribution Depr. Reserve	219.26.c	0	0	0	N/A		
10	General Depr. Reserve	219.28.c	0	0	0	OATT LABOR	0.00000	0
11	Intangible Amort. Reserve	200.21.c	0	0	0	OATT LABOR	0.00000	0
12	**Total Accumulated Depr.**				0			0
	Net Plant in Service							
13	Net Production Plant	Line 1 - Line 7			0			
14	Net Transmission Plant	Line 2 - Line 8			0			0
15	Net Distribution Plant	Line 3 - Line 9			0			
16	Net General Plant	Line 4 - Line 10			0			0
17	Net Intangible Plant	Line 5 - Line 11			0			0
18	**Total Net Plant**				0	NP =	0.00000	0
	Adjustments to Rate Base - Deferred Taxes							
19	ADIT - 190	234.8.b&c	0	0	0	Exhibit DEF - 5		0
20	ADIT - 281 (Negative)	273.8.b&k	0	0	0	Exhibit DEF - 5		0
21	ADIT - 282 (Negative)	275.2.b&k	0	0	0	Exhibit DEF - 5		0
22	ADIT - 283 (Negative)	277.9.b&k	0	0	0	Exhibit DEF - 5		0
23	**Total Deferred Tax Adjustments**				0			0
24	**Unfunded Reserves**	Note U	0	0	0	Exhibit DEF - 5A		0
25	**Net 182.1 (+) / Storm Reserve (-) - Wholesale Transmission (Note B)**	230a.5.f	0	0	0	p. 5, l. 16	0.00000	0
26	**Plant Held for Future Use**	214.47.d	0	0	0	Note C		0
27	**Transmission Related CWIP - Identified Projects (Note V):**		0		0		0.50000	0
	Rate Base Adjustments - Network Upgrade Prepayments (Note O):							
28	Outstanding Balance - Network Prepayments (Note T)		0	0	0	D/A	(1.00000)	0
29	Interest Accrued/Capitalized on Network Prepayments		0	0	0	D/A	1.00000	0
30	**Total Network Upgrade Prepayment Adjustments**							0
	Working Capital:							
31	Cash Working Capital (1/8 O&M)	Page 3, line 17						0
32	M&S - Transmission	227.8.b&c	0	0	0	TExp	0.00000	0
33	M&S - Stores Expense	227.16.b&c	0	0	0	OATT LABOR	0.00000	0
34	Prepayments (Note L)	111.57.c&d	0	0	0	GP	0.00000	0
35	**Total Working Capital**							0
36	**Rate Base (Sum of Lines 18, 23 thru 27, 30, and 35)**							0
	AVERAGE CAPITALIZATION:							
37	Long-Term Debt	112.24.c&d	0	0	0			
38	Less Loss on Reacquired Debt	111.81.c&d	0	0	0			
39	Plus Gain on Reacquired Debt	113.61.c&d	0	0	0			
40	Less Securitization Bonds	Note I	0	0	0			
41	Net Long-Term Debt				0			
42	Preferred Stock	112.3.c&d	0	0	0			
	Common Stock Development:							
43	Proprietary Capital	112.16.c&d	0	0	0			
44	Less Preferred Stock	112.3.c&d	0	0	0			
45	Less Account 216.1	112.12.c&d	0	0	0			
46	Common Stock				0			
47	Total Capitalization (Sum of Lines 41, 42, and 46)				0			

DUKE ENERGY FLORIDA, INC.
OATT Transmission Non-Levelized Rate Formula Template Using Form-1 Data

Development of Revenue Requirements

Line	EXPENSES:	Reference	Total	Allocator		OATT Transmission
	O&M Expense					
1	TOTAL Transmission Expenses	321.112.b	0			
2	Less Account 561	321.84-92.b	0			
3	Less Account 565	321.96.b	0			
4	Net Transmission O&M	Note H	0	TExp	0.00000	0
5	Total Admin & General Expenses (Note S)	323.197.b	0			
6	Less (924) Property Insurance	323.185.b	0			
7	Less (928) Regulatory Commission Expenses	323.189.b	0			
8	Less (930.1) General Advertising Expenses	323.191.b	0			
9	Less Industry Dues and R&D Expense	335.1-3.b	0			
10	Net Labor Related A&G		0	OATT LABOR	0.00000	0
11	(924) Property Insurance	323.185.b	0			
12	Less system storm reserve funding		0			
13	Net Allocated Property Insurance		0	GP	0.00000	0
14	Trans. Related Regulatory Expense	Note D		D/A	1.00000	0
15	Trans. Related Advertising Exp.	Note D		D/A	1.00000	0
16	Adj. to Imputed Whlse PBOP Exp. - System	Page 6	0	OATT LABOR	0.00000	0
17	**Total O&M (Sum of Lines 4, 10, and 13 thru 16)**					**0**
	Depreciation Expense					
18	Transmission Depr. Expense (Note V)	336.7.f	0			
18A	Less Direct Assign Radial Depr Exp	DEF-7, line 8	0			
18B	Trans Depr. w/o Direct Assign Radials		0	TP	0.00000	0
19	General Depr. Expense	336.10.f	0	OATT LABOR	0.00000	0
20	Intangible Amortization (Note E)	336.1.f	0	OATT LABOR	0.00000	0
21	**Total Depreciation**		0			**0**
	Taxes Other Than Income (Note F)					
22	Labor Related	263.i	0	OATT LABOR	0.00000	0
23	Property Related	263.i	0	GP	0.00000	0
24	**Total Other Taxes**		0			**0**
	Return:					
25	Rate Base (Page 2, Line 36) * Rate of Return (Page 4, Line 27)					**0**
	Income Taxes:					
26	State of Florida	Note M	0.00%			
27	Federal	Note M	0.00%			
28	Composite T = State + Federal * (1 - State)		0.00%			
29	Tax Rev.Req't Factor = T / (1 -T) * (1 - Wtd.Debt.Cost/R_o)		0.00%			
30	ITC Gross Up Factor = 1 / (1 -T)		0.000			
31	Amortized ITC (Negative)	266.8.f	0			
32	Income Taxes Calculated (Line 25 * Line 29)					0
33	ITC Adjustment (Line 30 * Line 31)		0	NP	0.00000	0
34	**Total Income Taxes**					**0**
35	**TOTAL REVENUE REQUIREMENT (Sum of Lines 17, 21, 24, 25, and 34)**					**0**

DUKE ENERGY FLORIDA, INC.
OATT Transmission Non-Levelized Rate Formula Template Using Form-1 Data

Supporting Allocation Factor and Return Calculations

Line		Reference	Total
	B/E Avg. Transmission Plant Included in OATT Rate:		
1	Total Transmission Plant w/o D/A Radials	p 2, line 2B	0
2	Less Gen. Step-up Transformers in 353	Exhibit DEF - 4	0
3	Less Interconnection Facilities (Order 2003)	Exhibit DEF - 4	0
4	Less Energy Control Center	Note G	0
5	Avg.Trans Plant for OATT Rate		0
6	**TP Allocator (Line 5 / Line 1)**	Note H	0.00000
7	Add Back ECC to OATT Plant (Line 4 + Line 5)		0
7A	Add back D/A Radials to Total Trans Plt (line 1 + p2, l 2A)		0
8	**TExp Allocator (Expenses excluding 561 and 565) (Line 7 / Line 7A)**		0.00000
	Labor Allocation Factor		
9	Total Direct Payroll - O&M Labor	354.28.b	0
10	A&G Labor	354.27.b	0
11	Adj. - RCO Labor in A&G Labor		0
12	Adjusted Labor w/o A&G (Line 9 - Line 10 + Line 11)		0
13	Transmission O&M Labor	354.21.b	0
14	**Trans Labor Factor (Line 13 / Line 12)**		0.00000
15	**OATT LABOR Allocator (Line 5 / Line 7A * Line 14)**	Note H	0.00000
	Return and Average Capitalization:		
16	Long-Term Interest Expense	117.62 thru 67.c	0
17	Less Interest on Securitization Bonds	Note I	0
18	Net Long-Term Interest Expense		0
19	Preferred Dividends (positive)	118.29.c	0
20	Long-Term Debt	p.2, line 41	0
21	Preferred Stock	p.2, line 42	0
22	Common Stock	p.2, line 46	0
23	Total Capitalization (sum Lines 20, 21, 22)		0

	SUMMARY CAP STRUCTURE	Weight	Cost	Weighted Cost
24	Long-Term Debt	0.00%	0.00%	0.00%
25	Preferred Stock	0.00%	0.00%	0.00%
26	Common Equity	0.00%	**10.80%**	0.00%
27	**Overall Return: R_d =**			**0.00%**

DUKE ENERGY FLORIDA, INC.
OATT Transmission Non-Levelized Rate Formula Template Using Form-1 Data

Wholesale Storm Reserve Funding and Explanatory Notes

Line		Reference	Total	Allocator		OATT Transmission
1	**Whlse Extraordinary Property Loss**	230a.5.b	0			
2	Trans. Related Pct of Whlse Loss	Note J	0.92011	WEPL-T		
3	**Whlse Trans. Extraordinary Propery Loss**		0	TP2006	0.92366	0
	Components of Storm Amortization/Reserve Funding Adder (2008-2012 Rate Years only - Note N):					
4	Balance 2004 Loss as of Jan 1, 2008	230a.5.f	15,658,702	Fixed	0.84987	13,307,907
	Rebuild Reserve Equivalent to $130MM Retail:					
5	Whlse Portion of $6MM Funding	ER95-469	434,000	Fixed	0.07233	
6	System Total Reserve Req't = 130MM/(1 - Line 5 %)		140,136,543			
7	Whlse Reserve Needed = Line 6 - $130MM		10,136,543	Fixed	0.84987	8,614,774
8	**Whlse Portion of Existing Storm Accrual**	ER95-469	434,000	Fixed	0.84987	368,845
9	**Levelized Storm Reserve Funding Rate $/MW-Month** (PEF - 6, Page 2)					**140**
	Denominator for Wholesale Transmission:					
10	Firm Network Service for Self	400.17.e	0		0.00000	0
11	Firm Network Service for Others (Note K)	400.17.f	0		1.00000	0
12	Long-Term Firm PTP Reservations	400.17.g	0		1.00000	0
13	Other Long-Term Firm Service	400.17.h	0		1.00000	0
14	Contract Demand Adjustment		0		1.00000	0
15	Total System Long-Term Firm Transmission Load		0			0
16	**Gross-up Factor for OATT Wholesale Reserve - System Basis** (Total Load/Whlse Load * 0.84987)					0.00000

Note A: Excludes Asset Retirement Obligations from plant balances
Note B: Because the Page 2 Rate Base amounts are total system numbers, the wholesale specific loss/reserve balance is grossed up using the relationship between system and wholesale only transmission demands times the percent of the balance applicable to the OATT. See also Notes H and J.
Note C: FERC Form 1 page 214 excluding non-transmission related items
Note D: Analysis of Company books. Regulatory expense excludes charges by FERC pursuant to 18 CFR § 382.201
Note E: Excludes Retail ECCR and Sebring amortizations from Form-1 reported value
Note F: Excludes all income and gross receipts taxes. Labor related other taxes include FICA and unemployment taxes. Property related taxes include county and local property, highway use, and intangible taxes.
Note G: Investment in Transmission Energy Control Center included in Schedule 1 Ancillary Service cost
Note H: The allocator "TP" is the percent of allocated gross transmission plant that is OATT related, i.e., after removal of ECC, interconnections and generator step-up transformer investment.
Note I: To the extent DEF is authorized by the Florida Public Service Commission and issues bonds for distribution facilities to securitize retail recovery of extraordinary property losses, associated principal and interest expense are excluded in capitalization and return basis.
Note J: Functionalized Transmission part 182.1 Extraordinary Property Losses balance only. "WEPL-T." Consistent with the process described in Note H above, the OATT-related amount of the transmission loss is then derived using the TP allocation factor
Note K: Includes Network Integration Service and Network Contract Demand Service
Note L: Beginning balance excludes $0 and ending balance excludes $0 for prepaid pensions from Form-1 A/C 165 balances.
Note M: If income tax rates change during a calendar year, the income tax rates will be pro-rated based on the number of days each income tax rate was in effect.
Note N: Pursuant to the settlement agreement, annual amounts included in line 11 will be adjusted and reversed as necessary to ensure no overfunding of the wholesale reserve; i.e., the year-end reserve balance for OATT rates will not exceed the $8,614,774 shown on line 7
Note O: Payments by DEF to an Affected System Operator pursuant to Orders 2003 or 2006 (including rehearing orders) are not to be included in the formula rate regardless of the accounting.
Note P: Target percentages are fixed for 2008 - 2012 and were derived from projected OATT LTF billing MW-months and the MW-month equivalent billings for STF and non-firm transmission revenues in the September 2007 DEF financial forecast.
Note Q: Actual LTF OATT MW-Months are the sum of Lines 11 and 12 above, as reported in Form-1 for Firm Network Service for Others and Long-Term Firm Point-to-Point Service
Note R: Actual STF/Non-Firm equivalent "MW-Months" are equal to monthly STF/Non-firm transmission service revenue divided by the same "Total Firm Monthly Trans. $/MW-Month" rate (Page 1, Line 11) from which the STF/Non-firm billing rates were derived
Note S: Section 2.12 of Schedule 10.3 states "The Formula Rate excludes all costs that are properly directly assigned or assignable to one or more particular customers, including costs directly assigned or assignable to DEF." Per Settlement of 2008 Annual Update, the amount specified excludes directly assignable retail costs/credits booked to Account 935 and retail sales tax portion of Florida sales tax audit expense booked to Account 930.2 from Form-1 reported value
Note T: Network prepayments include interest that has been accrued but not yet refunded.
Note U: The inclusion of Line 24, "Unfunded Reserves," ensures that identified "Unfunded Reserves" are appropriately excluded from rate base in the Formula Rate calculations. The specific treatment of these "Unfunded Reserves" in no way precludes the Transmission Provider or interested parties from making any argument in any proceeding at the Commission or in any review or challenge proceeding under the Formula Rate as to the appropriate accounting or ratemaking treatment in the Formula Rate of any unfunded reserve.
Note V: Adjusted to remove ADIFC accruals from CWIP projects that were included in rate base. Qualifying CWIP excludes CWIP associated with direct assignment radials
Note W: Should DEF construct and own radials directly assignable to wholesale customers, DEF shall make a Section 205 filing to amend its Formula Rate Template to remove the costs associated with wholesale direct assignment radials from the calculation of the OATT base rates. A new attachment (e.g., Exhibit DEF-x) shall be added to the template that sets forth the direct assignment radials by customer and by facility, showing the associated monthly balances for gross plant and accumulated depreciation reserves separately by project. The intent is that the accumulated depreciation reserves be maintained separately by customer and by project to capture the associated costs by customer and to reflect the appropriate effect of the vintage of each project. Such Exhibit DEF-x shall be structured to accommodate direct assignments to multiple wholesale customers. Exhibit DEF-2 shall be modified to remove the direct assignment wholesale radials from the base rate calculations in a manner consistent with retail radials, except that Exhibit DEF-2 shall be further modified to set forth separately the costs allocated to each wholesale customer's direct assignment radials in the aggregate in separate columns. Such Section 205 filing shall be made sufficiently in advance of the first occurrence of a direct assignment wholesale transmission radial to permit the requisite modifications to the Formula Rate Template to become effective with the in-servie date of the associated facility.

DUKE ENERGY FLORIDA, INC.
Transmission Rate Formula Support - Direct Assignment Retail Radials in Accordance with OATT Attachment U

Line	Project Description:	Project 1	Project 2	...	...	...	...	Project N	Total Projects
	Gross Plant in Service:								
1	Beginning Balance	0	0					0	0
2	Additions	0	0					0	0
3	Retirements	0	0					0	0
4	Adjustments	0	0					0	0
5	Ending Balance	0	0					0	0
6	B/E Average	0	0					0	0
	Accumulated Depreciation:								
7	Beginning Balance	0	0					0	0
8	Annual Deprecation Expense	0	0					0	0
9	Adjustments	0	0					0	0
10	Ending Balance	0	0					0	0
11	B/E Balance	0	0					0	0

OATT ATTACHMENT U.2

DEF's METHODOLOGY FOR DETERMINING THE LUMP-SUM COSTS ASSOCIATED WITH NON-INTEGRATED TRANSMISSION FACILITIES WHICH COMMENCE SERVICE AFTER MAY 31, 2010

DEF's non-integrated radial transmission lines that commence service after May 31, 2010, that initially serve only the Transmission Provider's retail customers or only one affected wholesale Transmission Customer shall be the responsibility, as applicable, of the retail class or the affected wholesale Transmission Customer. The costs associated with such facilities shall be excluded from the costs of transmission facilities recoverable through the base rates for transmission services under the Transmission Provider's OATT, including, if applicable, a formula rate. If and to the extent that the Transmission Provider constructs and owns a radial transmission line to serve a Transmission Customer, the Transmission Provider will assess a total lump-sum payment ("Lump-Sum Payment") to recover the capital costs of such facility, unless another payment method is mutually agreeable to the Transmission Provider and Transmission Customer, plus an operation and maintenance ("O&M") charge pursuant to an O&M agreement. If and to the extent that the Transmission Customer elects to construct and own a radial transmission line to serve its customer load, the Transmission Customer may request, and the Transmission Provider may agree, that the Transmission Provider will operate and/or maintain the Transmission Customer's radial transmission line pursuant to an O&M agreement that fully and fairly compensates the Transmission Provider for the costs associated with such undertaking.

The Transmission Customer's Lump-Sum Payment and charge for O&M costs under the O&M Agreement shall be determined at the time such charges are implemented in accordance with accepted ratemaking principles, either by mutual agreement or, if such agreement is not

possible, by a Section 205 or Section 206 filing with the Federal Energy Regulatory Commission ("FERC") by the Transmission Provider or the Transmission Customer, as applicable.

In the case of the Transmission Customer's payment of a Lump-Sum Payment, the Lump-Sum Payment shall be grossed up for income taxes if the Transmission Provider is required under applicable law to do so. If reasonably requested by the affected Transmission Customer, the Transmission Provider shall seek a private letter ruling from the Internal Revenue Service approving tax-free treatment for the Lump-Sum Payment, and shall consult with and allow the participation of the affected wholesale Transmission Customer in the process to secure such private letter ruling. Transmission Provider shall make a Section 205 filing at the FERC to reflect any change in the income tax treatment of Lump-Sum Payments.

When a radial transmission line that was subject to a Lump-Sum Payment by a wholesale Transmission Customer experiences a change in characteristics such that it is deemed an integrated transmission line because it meets FERC's standard for holding that the facility is integrated with the Transmission Provider's Transmission System, then the undepreciated portion (based upon straight line depreciation) of the Lump-Sum Payment based on the cost of such line, grossed up for income taxes to the extent the initial payment by the Transmission Customer was grossed up for taxes (note: the gross up shall use the original income tax factor applied to the undepreciated portion of the Lump Sum Payment), determined as of the last day of the calendar month during which such change in characteristics of such facility occurs, shall be refunded to the affected wholesale Transmission Customer no later than the last day of the first full calendar month following such change in characteristics of such facility. Any O&M charges associated with such radial transmission line shall cease effective the first day of the first full calendar month following such change in characteristics of the facility. Effective on the first day of the

first full calendar month following such change in characteristics of the facility, the costs associated with the undepreciated portion of such facility (i.e., the amount of the refunded Lump-Sum Payment) shall be recovered in the base rates for transmission services(s) under the OATT. To the extent such base rates are derived based upon a formula rate, the subsequent Annual Updates thereunder, and the True-Up Adjustment(s) pursuant to Section 1.a(ii) of Schedule 10-A.1 of the OATT, shall be adjusted to reflect the effective date of such change in characteristics of the facility.

For purposes of this Attachment U.2, the following definitions shall apply:

1. Affected wholesale Transmission Customer means any of the following: (a) a joint action agency, or other group of municipal electric utility systems, and/or their individual members; (b) a generation and transmission cooperative, and/or its individual members; or (c) any other wholesale Transmission Customer.
2. Radial transmission line means a transmission line that is physically radially constructed and does not meet the Commission's standard for holding that the facility is integrated with the Transmission Provider's Transmission System.
3. Transmission line means a facility $\geq$ 69 kV.

Nothing in this Attachment U.2 interferes with the Transmission Customer's absolute right to build and own a transmission radial to serve its own load.

ATTACHMENT V

POWER FACTOR REQUIREMENTS

[DEF ZONE]

Transmission Provider and Transmission Customer shall each have in place in the shortest practicable time, but under no circumstances later than forty-two (42) months after the Transmission Customer's service commences under the Tariff (referred to as the "Initial Compliance Period"), sufficient reactive compensation and control necessary to meet the power factor standard set forth herein. In the event that the Transmission Customer does not meet the power factor standard by the end of the Initial Compliance Period, Transmission Provider shall provide Transmission Customer with written notice of any alleged non-compliance (along with the data upon which such assertion is based), and, unless within sixty (60) days of receipt of such notice the Transmission Customer has initiated Dispute Resolution Procedures under Tariff Section 12 to determine whether it has met the power factor standards set forth herein, then Transmission Provider shall have the right to install such necessary equipment to meet the standard; provided, however, that the exercise of such right must be on a comparable basis as to all power factor aggregation zones of all other Transmission Customers and the Transmission Provider itself. Transmission Provider shall have the right to seek to recover such expenses from the Transmission Customer, consistent with the Dispute Resolution Procedures of the Tariff, based upon a showing, among other things, that Transmission Provider and all other Transmission Customers have met the power factor standard.

Each month, the Transmission Provider shall provide to the Transmission Customer a report of the power factor information as measured at the Point of Delivery for each Point of Delivery and by power factor aggregation zones for the Transmission Provider's Monthly

Transmission System Peak for both the Transmission Provider and all Transmission Customers. For the avoidance of doubt, to ensure comparability and no undue discrimination, each Transmission Customer will be provided monthly the power factor information described above as to all other Transmission Customers and the Transmission Provider. The Transmission Provider's and Transmission Customer's power factor for distribution Points of Delivery (voltages below 69 kV) will be adjusted down by two percent (2%) to convert to the transmission voltage level and be included in the appropriate power factor aggregation zone. By January 1st of each year, Transmission Provider and Transmission Customer will each provide to the other the forecast summer and winter peak season power factor at the Point of Delivery for each of their respective Points of Delivery and by power factor aggregation zones for the Ten-Year Transmission Planning Horizon. The summer season is defined as March through September and the winter season as October through February. By February 1st of each year, Transmission Provider and Transmission Customer shall each provide to the other plans on how it will meet the power factor standard where such standard is not currently being met or is forecasted not to be met for a specific power factor aggregation zone. To assess compliance with the power factor standard, each Point of Delivery's real power (kW) and reactive power (kVar) demands shall be recorded by the Transmission Provider at the time of Transmission Provider's summer and winter transmission system peaks, which will be determined from the monthly reports. The power factor standard that the Transmission Provider and Transmission Customer must adhere to requires that each power factor aggregation zone (measured at the Point of Delivery, adjusted, where applicable, as provided above, and based on total real (kw) and reactive (kvar) integrated 60 minute clock hour demands for each zone) be between 95% lagging and 99% leading

measured at the times coincident with the Transmission Provider's transmission system summer peak load and the Transmission Provider's transmission system winter peak load.

The power factor aggregation zones, which are defined on a geographic basis, for the Transmission Provider and for each Transmission Customer, shall be set forth in the Network Integration Transmission Service Agreement and/or Network Operating Agreement that is applicable to it. In addition, the Transmission Provider will post and maintain on its OASIS a list of power factor aggregation zones for the Transmission Provider and each current and pending Transmission Customer.

If, after the Transmission Customer fully complies with the power factor standard during the Initial Compliance Period, Transmission Customer then does not maintain and provide the necessary reactive compensation and control, on an on-going basis, to continue to comply with the power factor standard, Transmission Provider shall provide Transmission Customer with written notice of any alleged non-compliance, and if Transmission Customer does not resolve the matter to Transmission Provider's reasonable satisfaction within twenty-four (24) months from receipt of written notice, Transmission Provider shall have the unilateral right to install such necessary equipment to meet the standard; provided, however, that the exercise of such right must be on a comparable basis as to all power factor aggregation zones of all other Transmission Customers and the Transmission Provider itself. Transmission Provider shall have the right to seek to recover such expenses from the Transmission Customer, subject to the Dispute Resolution Procedures of the Tariff, based upon a showing, among other things, that Transmission Provider and all other Transmission Customers have met the power factor standard.

ATTACHMENT W
METHODOLOGY FOR CALCULATION OF REAL POWER LOSS FACTOR
(DEC ZONE AND DEP ZONE)

I. INTRODUCTION

The Real Power Loss factor is used to compensate the Transmission Provider for replacing losses associated with all transmission service in the DEC Zone and the DEP Zone.

II. ANNUAL LOSS FACTOR CALCULATION PERIOD

For services provided from June 1, 2019 and thereafter, each Real Power Loss factor shall be based on a contiguous 12-month period beginning December 1 at 00:00 of the year prior to the test year and ending on November 30 at 23:59 of the test year ("Calculation Period"). The Calculation Period shall be divided into four seasons as follows:

Calculation Period											
Dec	Jan	Feb	Mar	Apr	May	June	Jul	Aug	Sept	Oct	Nov
Winter			**Spring**			**Summer**			**Fall**		

- Winter – December 1 at 00:00 of the year prior to the test year through the last day of February at 23:59 of the test year,
- Spring – March 1 at 00:00 of the test year through May 31 at 23:59 of the test year,
- Summer – June 1 at 00:00 of the test year through August 31 at 23:59 of the test year, and
- Fall – September 1 at 00:00 of the test year through November 30 at 23:59 of the test year.

III. OVERVIEW OF LOSS CALCULATION METHODOLOGY

This section describes the overall methodology governing the calculation of the Real Power Loss factors. DEC and DEP each use different models and software to produce their annually-calculated Real Power Loss factors, which are described in Sections IV and V.

Real Power Losses for the Calculation Period shall be estimated for each hour in each season through a linear estimation of system losses as a function of hourly load. The equations for the linear estimation shall be derived from five data points using the methodology in Section III.b. The Real Power Loss factor shall be the sum of the Real Power Losses for each hour of the Calculation Period divided by the sum of the hourly demands at each Point of Delivery ("POD") for each hour of the Calculation Period expressed as a percentage, rounded to two decimal places. The Real Power Loss factor calculated for the DEP Balancing Authority Areas shall be on a combined basis (i.e., CPLE and CPLW).

a. SEASONAL LOAD DATA

Following the test year, DEC and DEP each shall supply to their respective Transmission Customers the following data in Excel format for each season of the Calculation Period:

i. Hourly load ranked from seasonal peak to seasonal minimum
ii. Date and time of each hourly load observation
iii. Transmission no-load loss spreadsheet (DEP only)

b. LOAD DATA POINT SELECTION FOR LOSS EQUATION CALCULATION

i. Five data points shall be selected for each season of the Calculation Period. Data points shall represent percentiles between the seasonal peak value and seasonal minimum load value for each Balancing Authority Area. The MW load points shall be determined as follows:

Seasonal Load Difference = Seasonal peak load less seasonal minimum load

First Data Point = (0.99 * Seasonal Load Difference) plus seasonal minimum load
Second Data Point = (0.85 * Seasonal Load Difference) plus seasonal minimum load
Third Data Point = (0.50 * Seasonal Load Difference) plus seasonal minimum load
Fourth Data Point = (0.15 * Seasonal Load Difference) plus seasonal minimum load
Fifth Data Point = (0.01 * Seasonal Load Difference) plus seasonal minimum load

Collectively, these shall be referred to as the "Data Points."

DEC and DEP each shall select the actual seasonal load that most closely approximates the MW value of the respective Data Points. Hours excluded by the application of section III.b.ii.(a)-(c) shall be replaced with hours that most closely approximate the MW value of the respective Data Points.

ii. DEC and DEP will exclude the following as representations of the Data Points:

(a) Any hour that DEP and the DEP Settling Transmission Customers,[1] or DEC and the DEC Settling Transmission Customers[2] (as applicable, depending on whether DEP's or DEC's real power transmission loss factor is being calculated) mutually agree should be excluded,[3] with such mutual agreement determined by no later than March 1 of the year immediately succeeding the Calculation Period;[4]

(b) Any hour during which the DEP or DEC (as applicable) system experienced an event that resulted in the filing by DEP or DEC of a report using the U.S. Department of Energy Electric Emergency Incident and Disturbance Report (Form OE-417)[5] or its successor; and

(c) Any hour that occurs on a NERC holiday.

iii. No later than February 1 of the year immediately succeeding the Calculation Period, DEC and DEP each shall supply their respective Transmission Customers with the month, day, hour and MW values selected to best represent the five Data Points for each season, for a total of twenty Data Points to represent the Calculation Period. In supplying such data, DEC and DEP each shall identify any Data Point exclusions that resulted from application of paragraphs III.b.ii.(b) and (c), along with the replacement hour Data Points for each such exclusion. DEC and DEP each shall determine Real Power Losses based upon the methodologies described in Sections IV and V.

c. LINEAR INTERPOLATION OF DATA POINTS

Losses for each hourly load shall be calculated from a linear interpolation of the Data Points described above.

For loads from the maximum seasonal load to the 85th percentile, the loss equation is:

$$LossMW = [(LOSS_{99} - LOSS_{85}) / (LOAD_{99} - LOAD_{85})]*(LoadMW-LOAD_{85}) + LOSS_{85}$$

---

[1] "DEP Settling Transmission Customers" means the DEP Transmission Customers that are signatory to the Settlement Agreement in FERC Docket No. ER17-1357 (*i.e.*, North Carolina Eastern Municipal Power Agency, North Carolina Electric Membership Corporation, and the Fayetteville Public Works Commission).

[2] DEC Settling Transmission Customers" means the DEC Transmission Customers that are signatory to the Settlement Agreement in FERC Docket No. ER17-1357 (*i.e.*, North Carolina Municipal Power Agency Number 1, North Carolina Electric Membership Corporation, and Piedmont Municipal Power Agency).

[3] Upon request after February 1 of the year immediately succeeding the Calculation Period, Duke will informally discuss with the Settling Transmission Customers regarding whether additional hours should be excluded pursuant to mutual agreement.

[4] The final set of twenty Data Points will be determined no later than March 1 of the year immediately succeeding the Calculation Period to ensure sufficient time to post the recalculated Real Power Loss Factors by April 1 pursuant to the Protocols.

[5] Form OE-417 is a mandatory emergency form filed by specific electric power industry actors when at least one of the qualifying criteria is met–pursuant to Section 13(b) of the Federal Energy Administration Act of 1974 (Public Law 93-275). https://www.oe.netl.doe.gov/docs/OE417_Form_Instructions_05312021.pdf.

where $LOSS_{99}$ and $LOSS_{85}$ are the losses at the load levels for the 99th and 85th percentiles and $LOAD_{99}$ and $LOAD_{85}$ are the load levels at the 99th and 85th percentiles.

For loads from the 85th percentile to the 50th percentile, the loss equation is:

$$LossMW = [(LOSS_{85} - LOSS_{50}) / (LOAD_{85} - LOAD_{50})]*(LoadMW-LOAD_{50}) + LOSS_{50}$$

where $LOSS_{85}$ and $LOSS_{50}$ are the losses at the load levels for the 85th and 50th percentiles and $LOAD_{85}$ and $LOAD_{50}$ are the load levels at the 85th and 50th percentiles.

For loads from the 50th percentile to the 15th percentile, the loss equation is:

$$LossMW = [(LOSS_{50} - LOSS_{15}) / (LOAD_{50} - LOAD_{15})]*(LoadMW-LOAD_{15}) + LOSS_{15}$$

where $LOSS_{50}$ and $LOSS_{15}$ are the losses at the load levels for the 50th and 15th percentiles and $LOAD_{50}$ and $LOAD_{15}$ are the load levels at the 50th and 15th percentiles.

For loads from the 15th percentile to the minimum seasonal load, the loss equation is:

$$LossMW = [(LOSS_{15} - LOSS_{1}) / (LOAD_{15} - LOAD_{1})]*(LoadMW-LOAD_{1}) + LOSS_{1}$$

where $LOSS_{15}$ and $LOSS_{1}$ are the losses at the load levels for the 15th and 1st percentiles and $LOAD_{15}$ and $LOAD_{1}$ are the load levels at the 15th and 1st percentiles.

d. LOSS PERCENTAGE CALCULATION

Total losses by season shall be the sum of the hourly losses estimated by the equations above for every hour of the Calculation Period for each Balancing Authority. Total annual losses are the sum of the seasonal losses. The annual loss percentage is calculated as:

$$\text{Loss Factor} = (LOSS_{Winter} + LOSS_{Spring} + LOSS_{Summer} + LOSS_{Fall}) / \text{Total Load},$$

where $LOSS_{Winter}$ = sum of hourly loss calculations for each load level of the Winter Season of the Calculation Period, and

where $LOSS_{Spring}$ = sum of hourly loss calculations for each load level of the Spring Season of the Calculation Period, and

where $LOSS_{Summer}$ = sum of hourly loss calculations for each load level of the Summer Season of the Calculation Period, and

where $LOSS_{Fall}$ = sum of hourly loss calculations for each load level of the Fall Season of the Calculation Period, and

where Total Load = sum of hourly POD demand for each hour of the Calculation Period.

IV. DEC METHODOLOGY

a. DATA SOURCES

DEC's Energy Management System ("EMS") is used to monitor real time system operation. Operating data for the Transmission System at different system load levels from the EMS model is used to develop an equation for losses as a function of system load for each season. Once it is developed, the losses equation is applied to actual hourly system loads for a season to estimate hourly losses during that period, as described in Sections III.c and III.d.

The DEC EMS is a software based application from GE Grid Software Solutions. GE's state estimator "RTNET" (real time network solution) uses real time data and a detailed model of DEC's transmission system – more detailed than DEC's Transmission Planning models. The EMS is capable of storing system data in its proprietary database "NETMOM." The system data includes point of delivery loads, generator output, transmission system line/transformer loading & losses,[6] and net interchange. The DEC data is a snapshot of actual operating conditions at the time selected, including actual generation and transmission outages.

b. CALCULATION OF REAL POWER LOSS FACTOR

i. EMS Snapshot Data

At various load levels, DEC EMS snapshot data is used to establish the relationship between POD load in MW and Transmission System Line plus Transmission System Transformer losses ("TL") in MW. The name of the snapshot data file (e.g. 10576_041716.xls) represents the DEC system POD load level in MW. The EMS POD load level is computed in the state estimator by summing the individual state estimated bus loads. It does not include transmission losses or generating unit auxiliary loads. The load levels are chosen by selecting hourly snapshots as described in Section III.b. The date/times when actual load was closest to these values are selected and snapshots of hourly EMS data are obtained for those date/times. The EMS snapshot data is used to create two 5-point curves for each season (see DEC Wholesale Losses - Spring 2016.xls for example). One curve is to establish the relationship between the value of the TL losses versus the POD load value in MW. The second curve establishes the relationship between generator step-up transformer ("GSU") losses and the summation of POD load and TL losses in MW. The "POD and GSU Curve fit" tab contains graphs of the snapshot summary data and curves.
In each snapshot spreadsheet the "xf" tab is the EMS transformer (transmission system and GSU) loss data and the "ln" tab is the EMS line loss data. The EMS only provides load and loss data for transformers that are actually energized. The "XF Cross Reference" tab is the lookup table created to allow differentiation of which transformer loss data on the "xf" tab is for transmission system transformers and which is for GSUs.

[6] Transmission transformer and GSU Losses include both load and no-load losses. No-load losses, also called core losses, occur whenever at least one of the transformer terminals is connected to an energized source. No-load losses occur whether or not the other transformer terminals are connected or delivering power. Both load and no-load losses are calculated in the DEC EMS models.

The EMS model has a few station service transformers for generation or transmission station loads. These transformers do not contribute to calculation of transmission system or GSU losses. The "Summary" tab is used to calculate the value of the losses for the load level the snapshot was taken at.

ii. Seasonal Losses Summary

The summary data from the applicable snapshots is incorporated into a spreadsheet ("DEC Wholesale Losses Test") for each season that contains two 5-point curves. One curve establishes the relationship between the value of the TL losses versus the POD load value in MWs. The other curve establishes the relationship between GSU losses in MWs and the summation of POD load and TL losses in MWs. The "POD and GSU Curve fit" tab contains graphs of the snapshot summary data and curves.

DEC retains system data in a PI data archive system. This PI data contains the best available data for determining the energy input to the DEC transmission system. Data is captured by PI point 'SO0NETLOAD' for each hour of year under study. The data is shown in the first two columns on the "Summer loss" tab for example.

The data in the column titled "PI data for total energy input to the transmission system" is based on total gross generation output less generation auxiliaries plus net interchange on the DEC transmission system. This data represents the net energy input to the system but does not include the reduction in the value associated with GSU losses.

Applying the GSU curve fit equation to the "PI data for total energy input to the transmission system" allows calculation of the actual GSU losses (column "Calculated GSU losses at total energy input") for each hour of the season. The column titled "Total point of delivery load plus transmission system losses" results from subtracting the "GSU losses at total energy input" from the "PI data for total energy input to the transmission system."

Applying the TL losses curve fit equation to the "Total point of delivery load plus transmission system losses" allows calculation of the actual TL losses (column labeled Calculated Transmission losses") for each hour of the season. Subtracting the "Calculated Transmission losses" from the "Total point of delivery load plus transmission system losses" results in the "Total point of delivery load."

The diagram below illustrates the relationship between these factors. The point on the diagram below, indicated by the red arrow, correlates to the "Point of Delivery load + EMS Transmission Losses." This is derived from EMS data on the "POD and GSU Curve fit" tab and is the aggregate load on the system plus transmission line losses and transmission transformer losses. This point also represents the "Total

point of delivery load plus transmission system losses". It is derived from the PI data on the "Summer loss" tab by subtracting GSU losses from the total energy input to the transmission system PI data point. Knowing the mathematical relationship between the POD load and TL losses allows calculation of total energy entering the transmission system at all POD load levels, and by extension the relationship between TL losses and all levels of the energy injected into the transmission system at the red arrow. The GSU losses curve fit shows the relationship between GSU losses and all levels of energy injected into the transmission system (the red arrow). From the hourly PI data for the energy injected into the transmission system and these mathematical relationships, the actual TL losses and GSU losses for each hour of the season can be calculated.

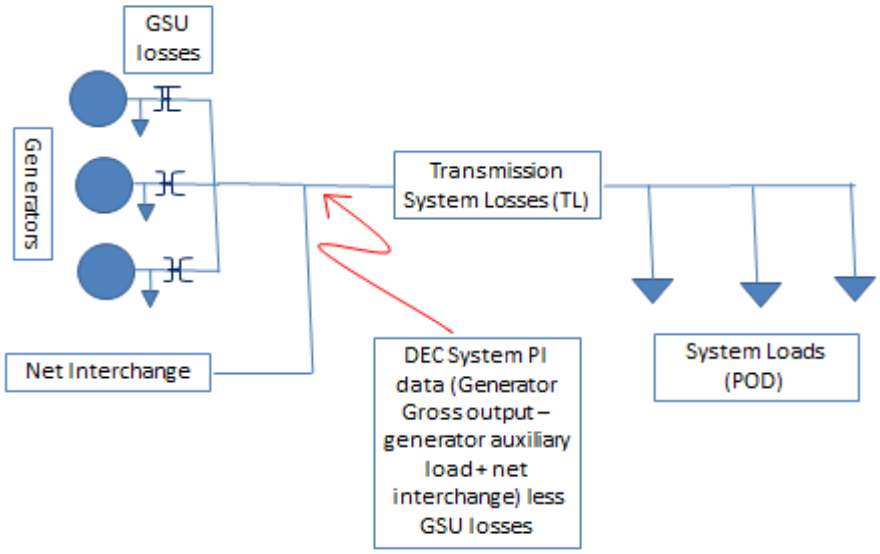

Using the seasonal study results for the total Transmission losses and GSU losses, DEC loss calculation then proceeds as described in Section III above.

V. DEP METHODOLOGY

a. DATA SOURCES

The DEP methodology uses power flow models created for hourly Available Transfer Capability ("ATC") calculations, including day-ahead forecasts for load, generation, and transmission topology, and including known outages. Power flow cases are not saved at the time of the ATC calculations due to the size and quantity of the files, but all input parameters are saved. Once the twenty load points are chosen per Section III.b, the saved input parameters are used to recreate those specific ATC base cases. Because actual loads at the selected hours may be different from the day-ahead forecast loads for those hours, the day-ahead forecast loads are replaced with the actual loads at the start of the case creation process for this losses analysis. Other known system conditions at the time of ATC analysis are retained in the model.

b. CALCULATION OF REAL POWER LOSS FACTOR

i. Load

DEP Area load is extracted from the power flow cases using the PSS/E Area Report for the two DEP Balancing Authorities (CPLE and CPLW). The total load reported by PSS/E is equivalent to the total load measured at the Transmission Customer PODs.

ii. Real Power Losses

To use the PSS/E Area Report to extract Real Power losses from the models, all non-transmission equipment, such as GSU transformers and distribution equipment are first deleted. After non-transmission equipment is deleted, a PSS/E Area Report is created for the two DEP Balancing Authorities (CPLE and CPLW). The total losses shown in this report represent the Real Power losses for DEP, with the exception of transformer no-load losses.

DEP does not include transformer no-load losses in its PSS/E planning models, similar to a majority of utilities in North America. DEP keeps an Excel workbook list of the no-load losses of its transmission transformers. These no-load losses are added to the losses from the PSS/E models to calculate the total Real Power losses for DEP. As long as DEP maintains transformer no-load losses in a list separate from the models discussed in Section V.a., the no-load losses list will be reviewed and updated annually as a part of this process. At the beginning of each annual loss factor update, Duke Energy will review the lists of generators and GSU transformers in their models to confirm the treatment of GSU losses. In particular, for new generators added to the models since the previous year, whether Duke-owned or third party-owned, the meter location and any meter compensation will be confirmed to determine GSU transformer loss treatment. The appropriate modeling of retired generators and their GSU transformers will also be confirmed.

The DEP loss calculation then proceeds as described in Section III above.

ATTACHMENT X

NON-FIRM ENERGY EXCHANGE TRANSMISSION SERVICE

[DEC ZONE, DEP ZONE AND DEF ZONE]

Section 1. Scope and Application

1.1 This Attachment X applies solely to the provision of Non-Firm Energy Exchange Transmission Service by the Transmission Provider.

1.2 Any capitalized terms not defined specifically herein have the meaning ascribed to them in Part I of the Tariff.

1.3 To the extent any provision of the Tariff conflicts with this Attachment, this Attachment controls as to the provision of Non-Firm Energy Exchange Transmission Service.

Section 2. Definitions

2.1 **"ENERGY EXCHANGE"** is the "Energy Exchange" as that term is defined in the Energy Exchange Agreement.

2.2 **"ENERGY EXCHANGE PARTICIPANT"** is a "Participant" as that term is defined in the Energy Exchange Agreement.

2.3 **ENERGY EXCHANGE MEMBER"** is a "Member" as that term is defined in the Energy Exchange Agreement.

2.4 **"ENERGY EXCHANGE SYSTEM"** is the "Southeast EEM System" as that term is defined in the Energy Exchange Agreement.

2.5 **"ENERGY EXCHANGE AGREEMENT"** means the "Southeast Energy Exchange Market Agreement," designated as DEC's Rate Schedule FERC No. 567, DEP's Rate Schedule FERC No. 394 and DEF's Rate Schedule No. 388 as it may be amended from time to time.

2.6 **"NON-FIRM ENERGY EXCHANGE TRANSMISSION SERVICE CUSTOMER"** means a Transmission Customer taking Non-Firm Energy Exchange Transmission Service provided in accordance with this Attachment X of this Tariff pursuant to an executed Service Agreement for Non-Firm Energy Exchange Transmission Service, Attachment X-1 to this Tariff.

Section 3. Nature of Non-Firm Energy Exchange Transmission Service

3.1 Term. Non-Firm Energy Exchange Transmission Service will be available on an as-available basis for 15-minute Energy Exchanges.

3.2 Reservation Priority. Non-Firm Energy Exchange Transmission Service shall be available from transfer capability in excess of that needed for reliable service to Native Load Customers, Network Customers and other Transmission Customers taking Long-Term and Short-Term Firm Point-To-Point Transmission Service, Non-Firm Point-to-Point Transmission Service and Secondary Point-to-Point. Non-Firm Energy Exchange Transmission Service will have the lowest reservation priority under the Tariff.

3.3 Scheduling and Reservation. Non-Firm Energy Exchange Transmission Service may only be reserved, scheduled and tagged through the reservation, scheduling and e-tagging functions of the Energy Exchange System, rather than directly through the Transmission Provider's OASIS.

3.4 Availability. Non-Firm Energy Exchange Transmission Service will be made available for Energy Exchanges from ATC after procurement and scheduling deadlines have passed for the next operating hour, taking into account other higher priority confirmed reservations and the limitations of the Transmission System of the Transmission Provider.

3.5 Curtailment and Interruption. The Transmission Provider reserves the right to Curtail, in whole or in part, Non-Firm Energy Exchange Transmission Service provided under the Tariff for reliability reasons when an emergency or other unforeseen condition threatens to impair or degrade the reliability of its Transmission System or the systems directly and indirectly interconnected with Transmission Provider's Transmission System. Transmission Provider may elect to implement such Curtailments pursuant to the Transmission Loading Relief procedures specified in the NERC Transmission Loading Relief procedures and, as to DEP, Attachment L of the Tariff. The Transmission Provider reserves the right to Interrupt, in whole or in part, Non-Firm Energy Exchange Transmission Service provided under the Tariff to accommodate (1) transmission service for Network Customers, (2) transmission service for Firm Point-to-Point Transmission Service; and (3) transmission service for Non-Firm Point-to-Point Transmission Service. Where required, Curtailments or Interruptions will be made on a non-discriminatory basis to the transaction(s) that effectively relieve the constraint, however, Non-Firm Energy Exchange Transmission Service shall be subordinate to all other types of transmission service provided under this Tariff.

3.6 Transmission Losses. Real Power Losses are associated with all transmission service. The Transmission Provider is not obligated to provide Real Power Losses. The Non-Firm Energy Exchange Service Transmission Customer is responsible for replacing losses associated with all transmission service as calculated by Transmission Provider based on the applicable Real Power Loss Factor set forth in Attachment W to the Tariff for the DEC Zone and DEP Zone and Section 15.7 for the DEC Zone and consistent with Section 6.1.2 of this Attachment X. The Transmission Provider will provide such information to the

Energy Exchange System in accordance with the Energy Exchange Agreement, Appendix B, Section IV.B.2.

3.7 Transmission Provider's Obligations.

3.7.1 Transmission Provider will provide the Energy Exchange System with all information required by Participating Transmission Providers, as that term is defined in Appendix B of the Energy Exchange Agreement.

3.7.2 Transmission Provider is not obligated to (i) plan, construct, or maintain the Transmission System for the benefit of any Energy Exchange Participant; (ii) provide Non-Firm Energy Exchange Transmission Service in a manner that is contrary to the terms of this Tariff, or contrary to Good Utility Practice, each as determined in the sole judgement of the Transmission Provider; (iii) provide Non-Firm Energy Exchange Transmission Service to any Transmission Customer who is not an Energy Exchange Participant; (iv) provide Non-Firm Energy Exchange Transmission Service following Transmission Provider's removal or withdrawal from the Energy Exchange Agreement; or (v) file its Tariff with FERC if the Tariff is not already required to be filed with FERC.

3.7.3 Transmission Provider's participation in the Energy Exchange System is voluntary, and may be terminated at any time in accordance with the provisions of the Energy Exchange Agreement. It is therefore expressly understood, and a condition of service, that Non-Firm Energy Exchange Service Transmission Customer has no reliance interest in provision of Non-Firm Energy Exchange Transmission Service, and has no right to rely on Transmission Provider continuing to provide Non-Firm Energy Exchange Transmission Service.

Section 4. Initiation of Non-Firm Energy Exchange Transmission Service

4.1 Non-Firm Energy Exchange Transmission Service is available only to Eligible Customer that:

4.1.1 Are in good financial standing with the Transmission Provider.

4.1.2 Have submitted a Completed Application for Non-Firm Energy Exchange Transmission Service to the Transmission Provider. To initiate service, Non-Firm Energy Exchange Transmission Service Eligible Customers shall contact the persons listed on Transmission Provider's Business Contacts page on its OASIS site.

4.1.2.1 A Completed Application for Non-Firm Energy Exchange Transmission Service must include the following information:

(i) The identity, address, telephone number and facsimile number of the entity requesting service;

(ii) A statement that the entity requesting service is, or will be upon commencement of service, an Eligible Customer.

(iii) A statement that the entity requesting service is, or will be upon commencement of service, an Energy Exchange Participant; and

(iv) The service commencement date of the requested Non-Firm Energy Exchange Transmission Service.

The Transmission Provider shall treat this information consistent with the standards of conduct contained in Part 37 of the Commission's regulations.

4.1.3 Meet the creditworthiness criteria set forth in Attachment O to the Tariff.

4.1.4 Have executed a Service Agreement for Non-Firm Energy Exchange Transmission Service, Attachment X-1 of this Tariff.

Section 5. Limitations on Usage of Non-Firm Energy Exchange Transmission Service

5.1 Non-Firm Energy Exchange Transmission Service can be used solely for Energy Exchanges.

5.2 Non-Firm Energy Exchange Transmission Service may not be reassigned, redirected, or sold by the Non-Firm Energy Exchange Transmission Service Customer.

Section 6. Charges for Non-Firm Energy Exchange Transmission Service

6.1 The Non-Firm Energy Exchange Transmission Service Customer shall compensate the Transmission Provider for Non-Firm Energy Exchange Transmission Service as follows:

6.1.1. Rate for Non-Firm Energy Exchange Transmission Service: The rate for intra-hourly delivery shall be $0/MW of Reserved Capacity per 15-minute increment.

6.1.2. Rate for Real Power Losses: The rate for Real Power Losses shall be established in accordance with Schedule 9 to the Tariff. Non-Firm Energy Exchange Service Transmission Customers must use option 3 in Schedule 9 and compensate the Transmission Provider accordingly.

6.1.3. Ancillary Services: As described in Section 6.2.1, the charge for Schedule 1 or Schedule 2 Ancillary Services is $0.

6.2 Ancillary Services

6.2.1. Notwithstanding the requirements in Part I of the Tariff, Section 3, the Non-Firm Energy Exchange Transmission Service Customer shall pay for the following Ancillary Services at the rate established in Section 6.1.3 of this Attachment X: (a) Scheduling, System Control and Dispatch, and (b) Reactive Supply and Voltage Control from Generation or Other Sources.

6.2.2. The Non-Firm Energy Exchange Transmission Service Customer serving load within the Transmission Providers Control Area must demonstrate that it already has made alternate arrangements for the following Ancillary Services or it must acquire them from the Transmission Provider, from a third party, or by self-supply: (i) Regulation and Frequency Response, (ii) Energy Imbalance. A Non-Firm Energy Exchange Transmission Service Customer delivering power from a generator in Transmission Provider's Control Area off system must demonstrate that it already has made alternate arrangements for the following Ancillary Services or it must acquire them from the Transmission Provider, from a third party, or by self-supply: (i) Generator Regulation and Frequency Response and (ii) Generator Imbalance.

ATTACHMENT X-1

Form Of Service Agreement For Non-Firm Energy Exchange Transmission Service

[DEC ZONE, DEP ZONE and DEF ZONE]

1.0 This Service Agreement, dated as of _____, is entered into, by and between _____ (the "Transmission Provider"), and _____ ("Non-Firm Energy Exchange Transmission Service Customer").

2.0 The Non-Firm Energy Exchange Transmission Service Customer has been determined by the Transmission Provider to be an Eligible Customer under Part I of the Tariff and an Energy Exchange Participant as defined in Attachment X of the Tariff, and has filed a Completed Application for Non-Firm Energy Exchange Transmission Service in accordance with Section 4 of Attachment X of the Tariff.

3.0 Service under this Agreement shall be provided by the Transmission Provider upon request by an authorized representative of the Non-Firm Energy Exchange Transmission Service Customer and subject to the scheduling procedures outline in the Energy Exchange Agreement.

4.0 Non-Firm Energy Exchange Transmission Service Customer has all the rights and obligations of a Transmission Customer as set forth in Part I of the Tariff, except as specifically excluded in Attachment X to the Tariff.

5.0 The Non-Firm Energy Exchange Transmission Service Customer agrees to supply information the Transmission Provider deems reasonably necessary in accordance with Good Utility Practice in order for the Transmission Provider to provide the requested service.

6.0 The Transmission Provider agrees to provide and the Non-Firm Energy Exchange Transmission Service Customer agrees to take and pay for Non-Firm Energy Exchange Transmission Service in accordance with the provisions of Attachment X of this Tariff and this Service Agreement.

7.0 The Non-Firm Energy Exchange Transmission Service Customer is responsible for replacing Real Power Losses associated with all Non-Firm Energy Exchange Transmission Service. Transmission Provider will supply and the Non-Firm Energy Exchange Transmission Service Customer will pay for such Real Power Losses in accordance with Sections 3.6 and 6.1.2 of Attachment X.

8.0 Service under this agreement shall terminate on such date as mutually agreed upon by the parties or in accordance with Section 9 of this Service Agreement.

9.0 Transmission Provider's participation in the Energy Exchange System is voluntary, and may be terminated at any time in accordance with the provisions of the Energy Exchange

Agreement. It is therefore expressly understood, and a condition of service, that Non-Firm Energy Exchange Transmission Customer has no reliance interest in provision of Non-Firm Energy Exchange Transmission Service, and has no right to rely on Transmission Provider continuing to provide Non-Firm Energy Exchange Transmission Service. Accordingly, if the Transmission Provider terminates its participation in the Energy Exchange System, the Transmission Provider can cancel this Service Agreement.

10.0 Any notice or request made to or by either Party regarding this Service Agreement shall be made to the representative of the other Party as indicated below.

Transmission Provider:

_____
_____
_____

Non-Firm Energy Exchange Transmission Service Customer:

_____
_____
_____

8.0 The Tariff is incorporated herein and made a part hereof.

IN WITNESS WHEREOF, the Parties have caused this Service Agreement to be executed by their respective authorized officials.

Transmission Provider:

By: _____ _____ _____
Name Title Date

Non-Firm Energy Exchange Transmission Service Customer:

By: _____ _____ _____
Name Title Date